University Edition.

A

MANUAL

OF

SPHERICAL AND PRACTICAL

ASTRONOMY:

EMBRACING

THE GENERAL PROBLEMS OF SPHERICAL ASTRONOMY THE SPECIAL APPLICATIONS TO NAUTICAL ASTRONOMY, AND THE THEORY AND USE OF FIXED AND PORTABLE ASTRONOMICAL INSTRUMENTS

WITH AN APPENDIX ON THE METHOD OF LEAST SQUARES

BY

WILLIAM CHAUVENET,

PROFESSOR OF MATHEMATICS AND ASTRONOMY IN WASHINGTON UNIVERSITY, SAINT LOUIS

VOL II

THEORY AND USE OF ASTRONOMICAL INSTRUMENTS.

METHOD OF LEAST SQUARES

FIFTH EDITION, REVISED AND CORRECTED

PHILADELPHIA
J B LIPPINCOTT COMPANY
LONDON 5 HENRIETTA STREET, COVENT GARDEN
1908

CONTENTS OF VOL. II.

THEORY AND USE OF ASTRONOMICAL INSTRUMENTS.

CHAPTER I

	PAGE
e TELESCOPE	9
gnifying power measured	22

CHAPTER II

THE MEASUREMENT OF ANGLES OR ARCS IN GENERAL—CIRCLES—MICROMETERS —LEVEL	29
Graduated circles	29
The vernier	30
The reading microscope	33
Eccentricity of graduated circles	37
Periodic functions	42
Ellipticity of the pivot of the alidade	47
Errors of graduation	51
The filar micrometer	59
The level	70

CHAPTER III

INSTRUMENTS FOR MEASURING TIME	77
Chronometers	77
omparison of chronometers	79
locks	84
he electro-chronograph	86

CHAPTER IV

HE SEXTANT, AND OTHER REFLECTING INSTRUMENTS	92
escription of the sextant	94
djustment of the sextant	95
Method of observation	101
Theory of the errors of the sextant	106
The simple reflecting circle	119

	PAGE
The repeating reflecting circle	119
Theory of its errors	123
The prismatic reflecting circle and sextant	127

CHAPTER V

THE TRANSIT INSTRUMENT	131
Description of the transit instrument	132
Method of observation	138
General formulæ	139
The transit instrument in the meridian	140
Approximate adjustment	141
Equations of the transit instrument in the meridian	143
Thread intervals	146
Reduction to the middle thread	149
Reduction to the mean of the threads	151
Level constant	153
Collimation constant	160
Azimuth constant	169
Clock correction	174
Determination of the right ascension of stars	175
Transits of the moon, sun, and planets	176
Effect of refraction in transit observations	186
Meridian mark	187
Personal equation	189
Personal scale	193
Probable error of a transit observation	194
Application of the method of least squares to the determination of the time with a portable instrument in the meridian	200
The transit instrument in any vertical plane	209
Finding the time with a portable transit instrument out of the meridian (HANSEN's method)	215
Application of the method of least squares to the determination of the time with a portable transit instrument in the vertical circle of a circumpolar star (BESSEL's method)	227
Determination of the geographical latitude by a transit instrument in the prime vertical	238
Determination of the declinations of stars by their transits over the prime vertical	271

CHAPTER VI

THE MERIDIAN CIRCLE	282
Description of the meridian circle	283
Nadir point	285
Reduction to the meridian	289
Horizontal point Observations by reflection	293
Flexure	302
Observations of the declination of the moon	304
Observations of the declination of a planet, or the sun	309
Correction of the observed declination of a planet's or the moon's limb for spheroidal figure and defective illumination	310

CONTENTS.

CHAPTER VII

PAGE

THE ALTITUDE AND AZIMUTH INSTRUMENT . . . 315
Description (Pulkowa vertical circle) . . . 316
Universal instrument . . . 319
Theory of these instruments. Azimuths . . . 319
Altitudes or zenith distances . . . 326
Correction of the observed azimuth and zenith distance of the limb of the moon or a planet for defective illumination . . . 333

CHAPTER VIII

THE ZENITH TELESCOPE . . . 340
Description . . . 340
TALCOTT'S method of finding the latitude . . . 342
Correction for refraction . . . 344
Correction for the level . . . 346
Correction for the micrometer . . . 346
Reduction to the meridian . . . 347
Selection of stars . . . 347
Discussion of results . . . 350
Combination of the observations by weights . . . 356
Determination of the value of a division of the level . . . 358
Determination of the value of a revolution of the micrometer . . . 360
Extra-meridian observations with the zenith telescope . . . 364
Adaptation of the transit instrument as a zenith telescope . . . 366

CHAPTER IX

THE EQUATORIAL TELESCOPE . . . 367
Description (Pulkowa equatorial) . . . 367
General theory of the equatorial instrument . . . 370
Determination of the instrumental declination and hour angle of an observed point . . . 371
Flexure . . . 373
Reduction of the instrumental declination and hour angle to the celestial declination and hour angle . . . 375
Adjustment of the equatorial with respect to the pole of the heavens, and determination of the constants . . . 379

CHAPTER X

MICROMETRIC OBSERVATIONS . . . 391
The Filar Micrometer—Observation of distance and position angle of two stars . . . 391
Correction for errors of the equatorial instrument . . . 392
Reduction of the observed position angle to the mean of the position angles at the two stars . . . 395
Finding apparent difference of declination and right ascension of two stars . . . 397
Correction for proper motion of one of the stars . . . 398
The Heliometer . . . 403
Description (Konigsberg heliometer) . . . 405
General theory of the heliometer . . . 407

PAGE

Methods of observation . . 420
Determination of the constants 423
Observations upon the cusps of the sun in a solar eclipse 432
The Ring Micrometer 436
Correction for curvature of the path of the stars 438
Correction for the proper motion of one of the stars 441
Determination of the radius of the ring 445
Correction of micrometric observations for refraction 450
Correction of micrometric observations for precession, nutation, and aberration 465

APPENDIX METHOD OF LEAST SQUARES 469
Errors to which observations are liable 470
The arithmetical mean 473
The probability curve 478
The measure of precision 485
The probable error 487
The mean of the errors, and the mean error 490
The probable error of the arithmetical mean 492
Determination of the mean and probable errors of given observations 493
Determination of the mean and probable errors of functions of independent observed quantities 497
Weight of observations 504
Indirect observations 509
Equations of condition from linear functions 509
Normal equations 512
Mean errors and weights of the unknown quantities 514
Equations of condition from non-linear functions 526
Treatment of equations of condition when the observations have different weights 529
Elimination of the unknown quantities from the normal equations by the method of substitution, according to GAUSS 530
Determination of the weights of the unknown quantities when the elimination has been effected by the method of substitution 534
Independent determination of each unknown quantity and its weights, according to GAUSS 537
Mean error of a linear function of the unknown quantities 541
Conditioned observations 549
Criterion for the rejection of doubtful observations 558

TABLES List of the tables with references to the articles in which they are explained . 569

INDEX 627

PLATES.

PLATE I Figure 1, Reticule of transit instrument for electro-chronographic observations, Figs 2 and 3, Scales for reading off electro-chronographic records, Fig 4, Specimen (full size) of clock signals on the Morse fillet, Fig 5, Specimen of clock signals on SAXTON'S Cylindrical Register, Fig 6, Specimen of clock and star signals on a cylindrical register, regulated by BOND'S Spring-Governor, at the Observatory of Harvard College (Arts. 75, 77)

" II Figs 1 and 2, Reading microscope (Art 21), Fig 3, Filar micrometer (Art 41), Figs 4 and 5, Striding level (Arts 51, 61)

" III Fig 1, Sextant (Art 81), Fig 2, Collimator (Art 203)

" IV Transit instrument, by ERTEL (Art 119)

" V Portable transit instrument, by WURDEMANN (Art 120)

" VI Prime vertical transit instrument, by REPSOLD (Art 189)

" VII Meridian circle, by REPSOLD (Art 195)

" VIII " " pier

" IX " " reversing apparatus

" X Vertical circle, by ERTEL (Art 209)

" XI " "

" XII Altitude and azimuth (or universal) instrument (Art 210)

" XIII Zenith telescope, by WURDEMANN (Art 224)

" XIV Equatorial telescope, by MERZ and MAHLER (Art 242)

" XV Heliometer, by REPSOLD (Art 269)

THEORY AND USE

OF

ASTRONOMICAL INSTRUMENTS.

CHAPTER I

THE TELESCOPE

1 THE complete theory of the telescope considered simply as an optical instrument is too extensive a subject to be condensed into a chapter of the present work it must be sought for in the larger works on optics * I shall, therefore, confine myself to such points as appear to be immediately needed by the observer for the intelligent use of his instruments The following explanations, at once elementary and practical, some of which are not to be found in optical works, are chiefly derived from SAWITSCH †

2 *The simple astronomical telescope* —The astronomical telescope, in its simplest form, consists of two bi-convex lenses, the larger,

Fig 1

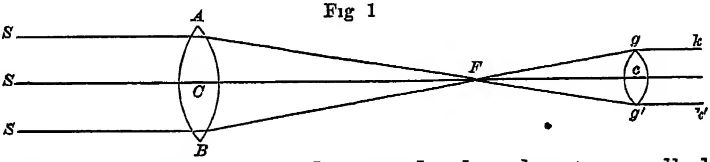

AB (Fig 1), which is turned towards the object, is called the

---

* See HERSCHEL'S *Treatise on Light*, PRECHTEL'S *Practische Dioptrik*, BIOT'S *Astronomie Physique*, Vols I and II, PORTER'S *Optics*, CODDINGTON'S *Optics*, LLOYD'S *Treatise on Light and Vision*, LITTROW'S *Analytische Dioptrik*, PEARSON'S *Practical Astronomy*

† *Abriss der practischen Astronomie, von* DR A SAWITSCH, *aus dem Russischen ubersetzt von* DR W C GŒTZE Hamburg, 1850.

objective, or, more commonly, the *object glass*, and the smaller, *gg'* through which the observer looks, is called the *ocular*, or, more commonly, the *eye glass* or *eye piece* The two surfaces of both these lenses are segments of spherical surfaces of different radii The *optical axis* of a lens is the straight line which passes through the centres of the two spherical surfaces which bound the lens The optical axis of the telescope is coincident with that of the object glass When the telescope is well constructed, the optical axis of the ocular should always be *parallel* to that of the objective, even when (as is usual in the larger instruments) the ocular is movable, this motion being in a plane at right angles to the axis of the telescope Where the ocular has no motion, its axis should coincide with that of the objective, and, consequently, with that of the telescope

3 Let us now suppose that our telescope, or rather its optical axis, is directed towards a star S Then, on account of the great distance of the star, we can assume that all the rays from it to various points of the object glass, as SA, SC, SB, are parallel to each other The ray SC, which passes along the optical axis itself, suffers no deviation from the refractive power of the lens, since it enters and leaves the lens at right angles to the refracting surfaces, but all other rays, as SA and SB, are refracted both when entering the lens and when leaving it, and, when the lens is small in proportion to the radii of curvature of its surfaces, these rays will all converge to a common point F in the axis of the telescope This common point in which a system of parallel rays meet is the *principal focus*, usually called simply *the focus*, of the lens, and the distance FC from the centre C of the lens is called the *focal length* of the lens If the radiant point S is so near to the telescope that the lines SA, SB are sensibly divergent, the lens will not bring them together at the principal focus, but at a point more remote, that is, the actual focus will be farther from the lens than F If the radiant point is at a distance from the lens equal to the principal focal distance, the divergent rays from this point will simply be rendered parallel by the lens, or the actual focus will be removed to an infinite distance For all astronomical purposes we need consider only the principal focus, regarding the rays, even from the nearest celestial body, the moon, as sensibly parallel The telescopes used in surveying instruments (where the terrestrial objects observed are at various

distances from the lens, and these distances all small) are provided with a ready means of adjusting the position of the objective, by sliding the part of the telescope tube containing it out and in so that the actual focus may always occupy the same absolute position in the optical axis, and, consequently, always be at the same distance from the ocular The same result is also obtained by giving the portion of the tube containing the ocular a sliding motion

4 All the parallel rays from a distant radiant point, as a star S, which are converged to the focus F, form an image of the star in that focus Conversely, if the radiant point be placed at F, all the divergent rays SA, SB, &c will emerge from the lens in parallel lines AS, BS, &c We shall hereafter have occasion to make several important applications of this property of a lens here we shall apply it at once to show how a distinct view of the image of a star at F is obtained The eye lens gg', being placed in the line CF produced, at a distance Fc equal to its own principal focal distance, it follows, from the property of a lens just stated, that the divergent rays Fg, Fg' will emerge in parallel lines gh, $g'h'$, and will, consequently, enter the eye of the observer in parallel lines, thus giving a distinct view of the star, for the eye, in persons who are neither far-sighted nor near-sighted, is naturally adapted for distinct vision when the rays entering it are parallel Without the telescope we should see only those rays from the star which fall upon the pupil of the eye, but when we look at the image of the star at the focus of a telescope, we see it with greater distinctness, because we then receive into the eye all the rays which have entered the object glass and have been united at the focus In this consists the *first* great advantage in the use of the telescope

5 Let a very fine thread be stretched in the focus F of the telescope at right angles to the optical axis This thread will be visible through the ocular when the latter is so placed that its focus coincides with F consequently, when the telescope is directed towards a star, we shall have distinct vision of both the star and this thread at the same time If two threads are placed at the focus at right angles to each other, their intersection will determine a fixed point in the field of view, which by moving the telescope may be brought upon the object to be

observed By bringing this point successively upon different celestial objects, their relative positions can be measured with the greatest precision, and in this consists the *second* great advantage in the use of the telescope Since the apparent thickness of these threads is increased by the magnifying power of the ocular it is necessary to use a very fine material the spider's web is that which is almost universally used

The *line of sight* is the straight line drawn from the thread through the optical centre of the objective, for this line represents the direction of a distant point (as a star), when the telescope is so directed that an image of the point is formed at the thread This line is also called the *line of collimation*, but we shall hereafter, for the sake of brevity, call it the *sight-line*

6 The spider lines, or threads, are usually stretched across a ring, or diaphragm, which is placed in a tube which slides in the principal tube of the telescope The ocular also slides without affecting the threads so that by means of these two motions we can bring the threads exactly into the common focus of the objective and ocular It is to be observed that the motion of the ocular is necessary merely for adaptation to the eyes of different observers The threads, being once accurately placed in the focus of the objective, must not be disturbed, but the ocular may be drawn out or pushed in by each observer until he obtains a distinct view of the threads To ascertain whether the threads are accurately placed in the focus of the objective, first adjust the ocular for distinct vision of the threads, then, bringing a thread upon a very distinct point, as a slow moving star, observe whether a motion of the eye in any direction towards the edge of the eye lens causes the star to leave the thread, for, if the image of the star is exactly *on* the thread, it ought to be seen on it even from a side view, but, if it is before or behind the thread, it will be seen on it only from a direct front view

7 *Magnifying power* —Let us suppose the telescope to be directed towards a *very distant* object DL (Fig 2) From its upper extremity D a multitude of rays proceed which fall upon all parts of the objective AB, and which (in consequence of the great distance of the object) may all be regarded as parallel to the line DCd which passes through the middle point of the lens All these rays are brought to a focus in this line DCd at a point d whose

distance from the lens is equal to the focal length of the lens There exists then at the point d a distinct image of the point D. In a

Fig 2

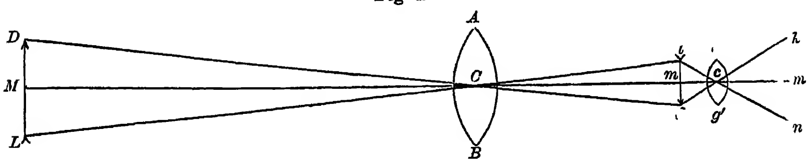

similar manner an image of every point of the object is found at the same distance behind the object glass so that there will exist at the focus of the lens a complete, though very small, image of the object This image will be inverted, for, while the image of the upper point D is formed at d, that of the lowest point L is formed at l, the axes of the systems of rays from the several points of the object crossing at the middle point C of the lens If the focus of the ocular is coincident with that of the objective, and, consequently, also with the image dl, the rays which diverge from a point d of the image and fall upon the ocular gg' will emerge from the latter in lines parallel to each other and to the line dch which is drawn from d through the centre of the ocular, and, the same being true of rays from every point of the image, those from the extreme point l emerge in lines parallel to the line lcn Hence the rays from the two extreme points d and l of the image enter the eye of the observer at an angle with each other equal to nch or lcd, and this angle is the *apparent angular magnitude* of the image to the eye But without the telescope the apparent angular magnitude of the object, the eye being at C, would be $DCL = dCl$, which angle may be assumed to be the same as that under which the object is seen from the actual position of the eye behind the ocular, the length of the telescope being inconsiderable in relation to the distance of the object Now, the apparent *linear* magnitudes of the object and its image seen thus under different angles can be compared by referring them to the same absolute distance Thus, referring the image dl (Fig 3) to the actual distance of the

Fig 3

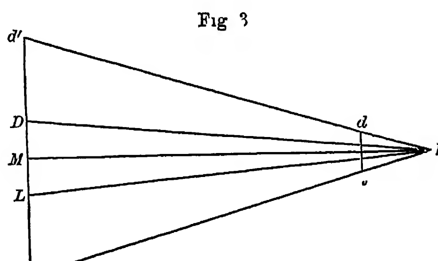

object DL, by the lines Edd', Ell' drawn from the eye at E, we have

$$d'l' : DL = d'M : DM = \tan \tfrac{1}{2}\, dEl : \tan \tfrac{1}{2}\, DEL$$

Hence, denoting the magnifying power by G, we have

$$G = \frac{d'l'}{DL} = \frac{\tan \frac{1}{2}\, dEl}{\tan \frac{1}{2}\, DEL} \qquad (1)$$

whence the proposition, (A), *The magnifying power of the telescope is equal to the tangent of half the apparent angular magnitude of the image seen through the ocular, divided by the tangent of half the apparent angular magnitude of the object seen without the telescope*

Referring again to Fig 2, we have the apparent magnitude of the image as seen through the ocular $= lcd$, and that of the object as seen by the naked eye $= lCd$, and

$$\tan \tfrac{1}{2}\, lcd : \tan \tfrac{1}{2}\, lCd = \frac{lm}{mc} : \frac{lm}{mC} = mC : mc$$

or

$$G = \frac{\tan \frac{1}{2}\, lcd}{\tan \frac{1}{2}\, lCd} = \frac{mC}{mc} \qquad (2)$$

whence the proposition, (B), *The magnifying power of the telescope is equal to the quotient of the focal length of the objective divided by the focal length of the ocular*

This principle serves for the calculation of the magnifying power when the focal lengths of the glasses are known, at least for the simple astronomical telescope here considered A mode of obtaining the magnifying power of any telescope by direct observation will be given below

We see then that with the same objective we can have various magnifying powers by simply varying the ocular, and the less the focal length of the ocular, the greater will be the magnifying power The more the telescope magnifies, the *nearer* will the object appear to us, and, consequently, the more distinctly will its several parts be seen Herein consists the *third* essential advantage in the employment of the telescope

8 *The field of view* —By the field of view is meant the space which can be viewed with the telescope at one and the same time The magnitude of the field depends upon the angle gCg' (Fig 4), which is contained by two rays from the centre of the objective to the extremities

Fig 4

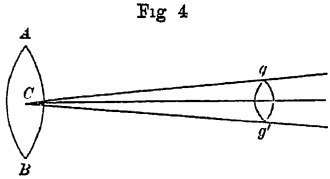

of a diameter gg' of the ocular, and consequently it depends upon the magnitude of the ocular and its distance from the objective. Most telescopes have *diaphragms*, or opaque rings, placed within the tube to cut off rays from the extreme edges of the objective, as well as stray light falling down the tube. If the inner edge of any diaphragm trenches upon the lines Cg, Cg', the magnitude of the field will be diminished, and will then depend upon the *free aperture* of the diaphragm, or upon that portion of the ocular upon which rays from the centre of the objective can fall.

As it is difficult to construct large eye pieces which shall give as perfect images near their edges as in the centre, it is usual to obtain a large field with a small eye piece by giving the latter a sliding motion at right angles to the axis of the telescope. In this case the whole available field depends also upon the quantity of motion possessed by the eye piece. Usually this motion can be given only in one direction, in which case the whole available field is oblong, its breadth being limited by the dimensions of the eye piece, and its length by the quantity of motion. Sometimes, however, two motions are provided, at right angles to each other, and then the whole of the free circular aperture of the diaphragm becomes available for the field.

9. *Brightness of images produced by the telescope, and the intensity of their light.* The image which the telescope gives of an object must possess a sufficient degree of brightness to make an impression upon our eye. Let us suppose two telescopes, the object glasses of which are of different diameters, to have the same magnifying power. Then the brightness of the two images formed will be proportional to the quantity of light which falls on the surface of the two objectives respectively, but these surfaces are proportional to the squares of the diameters of the objectives, and hence the brightness of the images is proportional to the square of these diameters. On the other hand, let us suppose two telescopes, with object glasses of equal diameters, to have different magnifying powers, then one and the same quantity of light is distributed over the larger and over the smaller image, and, consequently, in this case the brightness of the image is inversely proportional to the square of the magnifying powers.

It is to be observed, however, that not all the rays which fall upon the object glass reach the eye, partly on account of the want of absolute transparency of the glass, and still more on

account of the reflection of a number of rays from the surfaces of the lens Some light is also lost occasionally, when the breadth of the eye glass is not sufficient to embrace all the rays which proceed in a cone from the image of a radiant point formed at the focus, or when the pupil of the eye is not large enough to receive the whole cylinder which these rays form after passing through the eye glass Thus, in Fig 1, let $SABS$ be the cylinder of rays from a very distant point, falling upon the free opening of the object glass, $g'h'hg$, the cylinder of light which emerges from the eye glass, F the common focus of the two glasses On account of the similarity of the triangles ABF and $g'gF$, we have

$$AB : g'g = CF : Fc$$

But the magnifying power G is (Art 7) equal to $\frac{CF}{Fc}$, consequently, also,

$$G = \frac{AB}{g'g}$$

Now, *all* the rays which fall upon the object glass will enter the pupil of our eye only when $g'g$ is either equal to the diameter d of the pupil, or is less than d In the first case we shall have $G = \frac{AB}{d}$, in the second, $G > \frac{AB}{d}$ But if $G < \frac{AB}{d}$, we must have $gg' > d$, or the diameter of the cylinder of light emerging from the eye glass greater than the diameter of the pupil in that case, therefore, some of the light must be lost to the eye

Since every point of an object seen through a telescope must appear as a point, whatever may be the magnifying power of the telescope, it follows that the *intensity* of the illumination of the several points of the image in the telescope depends upon the quantity of light which proceeds from each point of the object and reaches our eye We must, therefore, not confound *intensity* with the *brightness* which results from the impression of the whole image upon the eye The intensity of the light is independent of the magnifying power, while the brightness is, as we have seen, inversely proportional to the square of the magnifying power According to these principles, the following explanation of the working of the telescope, given by the distinguished OLBERS, will be readily understood

"Let B be the brightness, I the intensity of light of an object seen through the telescope, both being supposed to be, for the naked eye, equal to unity Let D be the diameter of the object

glass, d that of the pupil of the eye, G the magnifying power of the telescope, and 1 m the ratio in which the light is diminished by its passage through all the glasses of the telescope, then we have

$$B = m \frac{D^2}{d^2 G^2} \qquad I = m \frac{D^2}{d^2} \qquad (3)$$

Now, so long as $G < \frac{D}{d}$, which, however, occurs only in telescopes of large objective apertures and low magnifying power, the quantity B must remain constant and $= m$, for, if G is less than $\frac{D}{d}$, the diameter of the cylinder of emergent rays from the ocular will be greater than can be received by the pupil, the eye then receives no more of the light than it would if the objective had the diameter Gd Hence, the greatest value of B is m, and can never be greater in the telescope Since in the best achromatic telescopes $m = 0\ 85$, we see that the brightness of an object is always greatest with the naked eye As soon as G is greater than $\frac{D}{d}$, the brightness rapidly diminishes as the square of G

"On the other hand, I, or the intensity of the light, is constant as soon as $G =$ or $> \frac{D}{d}$, provided that the field of view always includes the whole of the magnified object I can therefore become very great when D is great, and this is the reason why exceedingly faint stars can be seen through a telescope with a large objective The diameter d of the pupil (which may be assumed to be about 0 2 of an inch) is not only different in different observers, but also varies with the absolute intensity of the light of the object viewed,—*e g* it is less when we view the moon, greater when we view Saturn, less when we view the moon through a telescope of five inches aperture than through one of two inches aperture

"The sky, or 'ground of the heavens,' has a certain degree of brightness, not only in daytime, in twilight and moonlight, but even at night in the absence of the moon This brightness of the sky also diminishes in the telescope as $m \frac{D^2}{d^2 G^2}$, and therefore the ratio of the brightness of an observed object to the brightness of the sky remains constant for all magnifying powers This is the reason why for considerable magnifying powers we

do not observe a correspondingly great decrease of brightness. But, if we call this brightness of the sky b, although the ratio B b remains constant, our eye can, nevertheless, no longer distinguish the *difference* $B - b$ of the brightness of the object and the sky when this difference is very small Hence, faint nebulæ, tails of comets, &c become invisible under high magnifying powers The intensity of the light of the portion of the sky which we see in the telescope varies inversely as G^2, nearly * This intensity of the light of the field may be so great as wholly to prevent our seeing objects of feeble intensity This is the reason why with the comet-seeker (a telescope of large aperture and small magnifying power) we cannot see stars, even of the first magnitude, in the daytime, when we can see them without difficulty with telescopes of much smaller apertures and greater magnifying powers This also explains why with high magnifying powers we often discover very faint stars which are wholly invisible in the same telescope with lower powers "

The more perfect the telescope is, the more nearly will the image of a star resemble a bright point, and, according to the above, we may without hesitation always employ for the observation of fixed stars the highest magnifying powers

10 *Spherical and Chromatic Aberration* —A telescope of the simple construction above described would possess serious defects. All the parallel rays from an object which fall upon a simple spherical lens cannot be brought exactly to a common point in any case, and not even approximately unless the lens is small or of relatively great focal length The image of a fixed star will, therefore, not be a well defined point, but rather an ill defined spot of light, and the images of all objects will be the more distorted the greater the objective is in proportion to the focal length This deviation of the rays from a common point in the telescope is called the *spherical aberration*

In the simple astronomical telescope, still another difficulty exists for white rays of light, after they are refracted by a simple lens, are resolved into the colors of the prismatic spectrum, or of the rainbow, and, consequently, the image of any object will appear surrounded and disfigured by colored light This arises

* That is, the *effect upon the eye* of the whole of the light of that portion of the sky which is visible under the magnifying power G varies nearly as $\frac{1}{G^2}$, as is evident, since the field is diminished in this ratio

from the different degrees of refrangibility of the different colors The deviation of the rays of different colors from a common focus is called the *chromatic aberration*

With regard to the means by which the telescope is rendered almost wholly free both from spherical and from chromatic aberration, that is, rendered both *aplanatic* and *achromatic*, it must here suffice to state, in general terms, that the result is obtained by substituting for the simple lens a compound one of which the component lenses are made of glass of different degrees of refractive and dispersive powers There are generally two component lenses, as in Fig 5, one of which, AB, is a biconvex

Fig 5

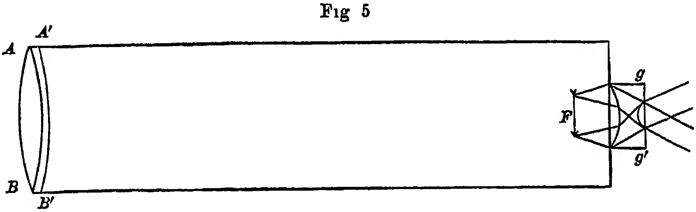

lens of *crown* glass, and is that which is turned towards the object, the other, $AA'BB'$, is a meniscus or concavo-convex lens of *flint* glass The latter kind of glass usually contains at least 33 per cent of oxyde of lead, from which crown glass is wholly free, and both its refractive and its dispersive powers exceed those of crown glass By giving the four spherical surfaces of the component lenses suitable curvatures, both the spherical and the chromatic aberrations produced by the crown glass lens are very nearly corrected by the flint glass lens

Even in the best telescopes an absolutely perfect compensation of the errors has not been reached Some idea of the relative excellence of the instrument may readily be obtained as follows The correction for spherical aberration is well made when the image of a star, in favorable states of the atmosphere, is a very small, well defined, round disc Having adjusted the eye piece, by sliding it out or in, until this disc is reduced to its least dimensions and most perfectly defined, the slightest motion of the eye piece from this position, either out or in, should disturb the perfection of the image: a telescope in which the character of the image remains sensibly the same during a considerable motion of the eye piece is imperfectly corrected for the spherical aberration. The correctness of the general figure of the lens is

judged of by sliding the eye piece in beyond the perfect focus, whereby the image becomes enlarged, but if the lens is symmetrical throughout, the image will remain circular, and in very perfect telescopes will present a number of complete concentric circular rings of light, a similar result should follow when the eye piece is drawn out An imperfect, unsymmetrical lens, with the eye piece out of focus, will give an image composed of incomplete and distorted rings, or only a confused and irregular mass of variously colored light If the glass of which the lens is composed is not perfectly homogeneous (one portion having greater refractive power than another), the images of bright stars of the first or second magnitudes will have what opticians call a *wing* on one side, which no perfection of figure or of adjustment can remove But the defective portion of the glass may be discovered by covering up successively different parts of the lens by means of caps of variable apertures in various positions, and some improvement in the performance of the lens may be obtained by excluding this defective portion, at the expense of light

The achromatism is judged of by pointing the telescope to some bright object, as the moon or Jupiter, and alternately pushing in and drawing out the eye piece from the place of most perfect vision in the former case, if the lens is good, a ring of purple will appear round the edge of the image, in the latter, a ring of pale green (which is the central color of the prismatic spectrum), for these appearances show that the extreme colors of the spectrum, red and violet, are corrected

11 *Achromatic eye pieces* —The eye pieces now most commonly used are of two kinds the *Huygenian* and the *Ramsden*

The *Huygenian* eye piece consists of two plano-convex lenses of crown glass, *A* and *B* (Fig 6), the convex surfaces of both being turned towards the object The first lens *A* receives the converging rays *Sa*, *Sb*, coming from the object glass, before they have reached the principal focus *F* of the object glass,

Fig 6

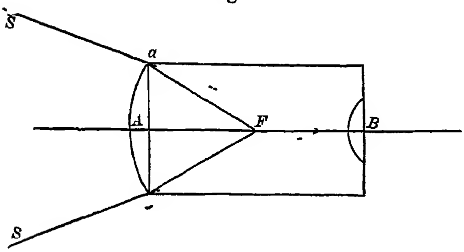

and brings them to a focus *F′* half-way between the two lenses

A and B. The focal length of the lens B being made equal to BF', the image formed at F' is distinctly visible to an eye behind B. Since this eye piece is adapted to rays already converging, instead of diverging rays, it is commonly called the *negative* eye piece.

The *Ramsden* eye piece is shown in connection with the telescope in Fig. 5. It also consists of two plano-convex lenses; but the plane surface of the lens nearest the object is turned towards the object. The diverging rays from an image F are rendered less divergent by the first lens, and finally parallel by the second lens; after emerging from the latter, therefore, they are adapted for distinct vision to an eye placed behind it. This eye piece being adapted for diverging rays, like the simple double convex lens, is called the *positive* eye piece. It is universally used wherever spider threads are placed in the focus of the object glass for the purposes of measurement, as in the transit instrument, &c.; for the permanency of the position of these threads is of the first importance, and this could not be insured unless the threads were so placed as to be independent of any motion of the eye piece. Threads are, however, often placed in the focus of a *Huygenian* eye piece merely to mark the centre of the field, as in the eye pieces of the telescopes of a sextant.

The optical qualities of the *Huygenian* eye piece are, however, superior to those of the *Ramsden*, the spherical aberration being more perfectly corrected; and it is, therefore, preferred for the mere examination of celestial objects when no measurements are to be made.

Neither of these eye pieces changes the apparent position of the image, which therefore remains inverted. Achromatic eye pieces designed to show objects in their erect positions usually consist of four lenses. They are used chiefly for land objects, and only in small telescopes. The great loss of light from the additional lenses is an insuperable objection to them for astronomical purposes.

The lenses composing the eye piece are fixed, at the proper distance from each other, in a separate tube, which has a sliding motion in another tube fixed to the telescope, so that it can be pushed in or drawn out and thus adapted for different eyes. For near-sighted persons it must be pushed in; for far-sighted persons, drawn out.

12 *Diagonal eye pieces* —When a telescope is directed towards an object near the zenith, it is always inconvenient, and often, with small instruments, impossible, for the observer to bring his eye directly under the telescope The inconvenience is obviated by employing an eye piece which bends the rays at right angles to the optical axis of the telescope, as in Fig 7, where the lens A receives the rays in the direction of the axis of the telescope and partially refracts them, they are then reflected by the plane surface M (placed at an angle of 45° with the axis) to the lens B, by which they are rendered parallel and adapted for distinct vision to the eye at B looking in the direction BM The surface M may be either a plane metallic mirror, or the interior face of a right prism of glass, the section of which is shown in the figure by the dotted lines The prism is usually preferred, as less light is lost by reflection from its interior face than from a metallic speculum

Fig 7

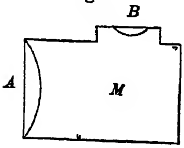

13 *To measure the magnifying power of a telescope* —*First Method* — The magnifying power depends upon the focal lengths of the object glass and eye piece (Art 7), and hence for the same telescope different eye pieces will give different magnifying powers We suppose, then, that the eye piece whose magnifying power is to be found is placed upon the telescope and very carefully adjusted for distinct vision of very distant objects If we then direct the telescope in daytime towards the open sky, we shall see near the eye piece, and a little way beyond it, a small illuminated circle, which is nothing more than the image of the objective opening of the telescope Let the diameter of this circle be measured by a very minutely divided scale of equal parts, then *the magnifying power is equal to the quotient arising from dividing the diameter of the object glass by the diameter of this illuminated circle* * For example, let the diameter of the object glass

* The demonstration of this rule is not usually given in our optical works Let ANB, Fig 8, be the objective, C the ocular, which we can regard as in effect a single lens, N the middle of the objective, n the middle of the small illuminated circle anb, which is the image of the objective opening formed beyond the ocular If we remove the object glass from the telescope tube, the image anb of the opening will still remain the same

Fig 8

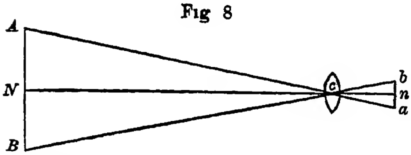

be 4 inches, that of the small illuminated circle $\frac{1}{20}$ of an inch, the magnifying power is $4 \div \frac{1}{20} = 80$

The chief difficulty in this method lies in the exact measurement of the diameter of the small illuminated circle. Various methods have been contrived for this purpose, but the most effective is by means of the instrument known as *Ramsden's Dynameter*.

Second Method (proposed by GAUSS).—If we reverse the telescope and direct the ocular towards any distant object, we shall, when looking through the objective, see the image of the object as many times diminished as we see it magnified when looking through the ocular. Select, therefore, two well defined points, lying in a horizontal line, and direct the telescope so that, looking into the objective, these points may appear to lie at about equal distances on each side of the optical axis. Then place a theodolite in front of the objective, level the horizontal circle, and bring the optical axis of its telescope nearly into coincidence with that of the larger telescope, so that looking into the objective of the latter, through the telescope of the theodolite, the selected points may be distinctly seen. Measure the apparent angular distance of the images of the points with the theodolite, by bringing the vertical thread successively upon these images and taking the difference a of the two readings of the horizontal circle. Remove the larger telescope, and measure in the same manner with the theodolite the angular distance A of the points themselves. Then the magnifying power G is given by the formula

---

as when the glass is in its place. Now, it is known, from the elements of optics, that if u is the distance of a bright object from a convex lens, v the distance of the image from the lens, f the focal length of the lens, we have the equation

$$\frac{1}{v} + \frac{1}{u} = \frac{1}{f}$$

Let F be the focal length of the objective, f that of the ocular, u the distance between them, then we have $NC = u = F + f$, $Cn = v$, and, consequently,

$$\frac{1}{v} = \frac{1}{f} - \frac{1}{F+f} = \frac{F}{f(F+f)}$$

Also,

$$\frac{AB}{ab} = \frac{NC}{nC} = \frac{F+f}{v} = \frac{F}{f}$$

But, by Art 6, $\frac{F}{f}$ expresses the magnifying power of the telescope; hence, also, $\frac{AB}{ab}$ expresses the magnifying power, as in the method of the text

$$G = \frac{\tan \frac{1}{2} A}{\tan \frac{1}{2} a} \tag{4}$$

or, if the angles A and a are very small, $G = \frac{A}{a}$

If the observed points are not very distant, we should in strictness measure the angle A by placing the theodolite at the point first occupied by the ocular, for A is the angle contained by the rays from the two points to the ocular, and a the angle contained by these rays after they have passed through the ocular and have been refracted by it

If the telescope cannot be removed conveniently, the angle A may be obtained by measuring the linear distance D of the middle point between the two observed points from the ocular, and the horizontal linear distance d between the points, then

$$\tan \frac{1}{2} A = \frac{d}{2D} \tag{5}$$

When the latter method is practised, however, it is necessary to observe that if the telescope of the theodolite, in measuring the angle a, is inclined to the horizon by the angle I, we must employ instead of a the angle a' given by the formula

$$\sin \tfrac{1}{2} a' = \sin \tfrac{1}{2} a \cos I$$

or, with sufficient precision,

$$\tan \tfrac{1}{2} a' = \tan \tfrac{1}{2} a \cos I$$

a reduction which was unnecessary where both A and a were measured by the theodolite, since the factor $\cos I$ would enter into both numerator and denominator of (4) But the reduction may also be neglected here, if by D is understood, not the direct distance from the ocular to the observed points, but the projection of this distance on the horizontal plane, and then the formula becomes $G = \frac{d}{D \sin a}$, with sufficient precision, since a is always very small

For accuracy, the angular distance of the points observed should be as great as can be embraced within the field of the telescope.

Example 1 —The angles A and a were directly measured with a theodolite, in the case of an equatorial telescope with a certain

eye piece, and were $A = 5° \ 10' \ 30''$, $a = 3' \ 10''$ We have, therefore, for this eye piece,

$$G = \frac{\tan 2° \ 35' \ 15''}{\tan 0° \ 1' \ 35''} = 98\ 12$$

Example 2 —For verification of the preceding measure, the angle A was also obtained without the theodolite, for which purpose there was measured the distance of the observed points from the ocular, $D = 303\ 2$ feet, and the distance between the points, $d = 26\ 98$ feet The inclination of the telescope of the theodolite was here observed to be $I = 10° \ 40'$, and as before by direct measure $a = 3' \ 10''$ We have first,

$$\tan \tfrac{1}{2} A = \frac{26\ 98}{606\ 4}$$

and hence

$$G = \frac{26\ 98}{606\ 4 \tan 1' \ 35'' \cos 10° \ 40'} = 98\ 30$$

The *horizontal* distance D was here 298 feet, with which, by the last formula above given, we have

$$G = \frac{26\ 98}{298 \sin 3' \ 10''} = 98\ 29$$

The magnifying power of this eye piece may therefore be taken at 98 3, or simply 98

Third Method (proposed by H B Valz, in the *Astronomische Nachrichten*, Vol vii) This very convenient method consists in directing the telescope towards any object of known angular diameter, and measuring the angle formed by rays from the extremities of a diameter after these rays have emerged from the eye piece The sun, the angular diameter of which is always known, is especially adapted for the purpose The image of the sun may be received upon a screen placed in the prolongation of the axis of the telescope with its flat surface carefully adjusted at right angles to that axis The telescope is to remain fixed, being properly directed so that the sun shall pass over the centre of its field, and as the image passes over the screen its linear diameter d is to be measured Also the perpendicular distance D from the middle of the eye piece to the screen Then, if a is

the true angular diameter of the sun, A the angular diameter of the image on the screen, subtended at the eye piece, we have

$$\tan \tfrac{1}{2}A = \frac{\tfrac{1}{2}d}{D}$$

and the magnifying power G, as before, is

$$G = \frac{\tan \tfrac{1}{2} A}{\tan \tfrac{1}{2} a} = \frac{d}{2D \tan \tfrac{1}{2} a} \tag{6}$$

Fourth Method—For small instruments, and where great accuracy is not required, the following process will answer Let a staff, which is very boldly divided into equal parts by heavy lines, be placed vertically at any convenient distance from the telescope, for example, fifty yards While one eye is directed towards the staff *through* the telescope, the other eye may observe the staff by looking along the outside of the tube One division of the staff will be seen by the eye at the eye piece to be magnified, so as to cover a number of divisions of the staff, and this number, which is the magnifying power required, may be observed by the other eye looking along the tube The staff here not being very distant, the focal adjustment of the telescope is not the same as for stars, the focal length is, in fact, somewhat greater than the "principal" focal length (Art 3), and the magnifying power obtained is proportionally greater than that which applies to very distant or celestial objects, the rays from which are sensibly parallel If we call the magnifying power obtained from the terrestrial object G', that for a celestial object G, F' the focal length employed, F the principal focal length, we have

$$F' : F = G' : G$$

For example, a telescope whose principal focal length was 24 inches, being directed towards a graduated staff, it was found that for distinct vision of the staff it was necessary to draw out the eye piece 0 75 inch Then, one division of the staff seen by the eye at the eye piece was observed by means of the other eye to cover 40 divisions Here we have $F = 24$, $F' = 24\ 75$, $G' = 40$, and hence

$$G = G' \ \frac{F}{F'} = 40 \times \frac{24}{24\ 75} = 38\ 8$$

Instead of using the divisions of a staff, which may not be sufficiently distinct, a disc of white paper may be placed against a black ground, and the size of the magnified image may be marked on the same ground by an assistant from signals made by the observer at the telescope

14 It was shown in Art 7 that the magnifying power is equal to $\frac{F}{f}$, F being the focal length of the objective, and f that of the ocular To apply this rule when the eye piece is composed of two lenses, it is necessary to find the focal length, f, of a single lens which is equivalent to the two lenses This is effected by the formula of optics

$$f = \frac{f' f''}{f' + f'' - d}$$

in which f', f'' are the focal lengths of the component lenses, and d the distance between them This formula, however, is but approximative (it gives f somewhat too great) it is better to measure the magnifying power directly by one of the methods above given

15 *Reflecting telescopes* —As these are rarely used for the purposes of *measurement*, we shall content ourselves with merely stating the forms of the two kinds which have been in most common use The simplest, and now most commonly used, is the *Herschelian* telescope, introduced by Sir WILLIAM HERSCHEL A polished concave speculum, *ab*, Fig 9, is placed at the bottom

Fig 9

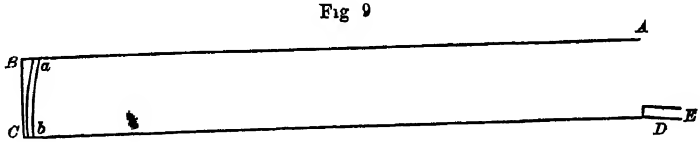

of a tube, *ABCD* It is ground to the form of a paraboloid, the focus of which is near the mouth of the tube, it is slightly inclined, so that the focus falls near one side of the tube, as at *D*, where the reflected rays from the speculum form an image which is viewed through an eye piece, *E*, of the usual form The head of the observer may intercept a small portion of the rays from a celestial object to the speculum, but this is of little conse-

quence, as the speculum is usually very large In Lord ROSSE's Herschelian, the diameter of the speculum is six feet

The reflecting telescope next in most common use is the *Newtonian*, which differs from the Herschelian only in receiving the reflected rays from the speculum upon a small plane mirror, *c*, Fig 10, placed in the middle of the tube near its mouth, which reflects these rays at right angles to the axis of the tube to an

Fig 10

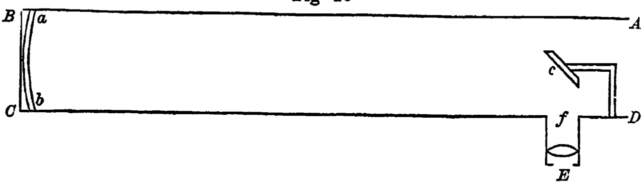

eye piece at *E*. In this form, the small plane mirror intercepts a portion of the light from the object, moreover, light is lost in the double reflection, but a slight advantage is gained in having the axis of the speculum coincide in direction with the axis of the tube The reflected rays reach the mirror *c* before they are brought to a focus they converge after reflection to the point *f*, where is produced the image which is examined through an eye piece by the eye at *E*

16 *Finding telescopes*—A telescope of great focal length and high magnifying power has a very small field, in consequence of which it becomes very difficult to find a small object in the sky This inconvenience is obviated by attaching to the outside of the tube a smaller telescope, called a *finder*, of low magnifying power and large field, with its axis adjusted parallel to that of the larger telescope The search for the object is made with the finder (both telescopes having a common motion), and, when found, it is brought to the middle of the field of the finder, it is then somewhere in the field of the larger telescope The middle of the field of the finder is indicated by the intersection of two coarse threads in the focus, or, still better, by four threads forming a small square, the middle point of which is the centre of the field.

CHAPTER II.

OF THE MEASUREMENT OF ANGLES OR ARCS IN GENERAL—CIRCLES—MICROMETERS—LEVEL

17 *Graduated Circles* —The most obvious mode in which an angle may be measured is that in which we employ a circle, or portion of a circle (constructed of metal or other durable material), the limb of which is mechanically divided into equal parts, as degrees, minutes, &c The centre of the circle being placed at the vertex of the angle to be measured, the arc of the circumference intercepted between the two radii which coincide in direction with the sides of the angle is the required measure * To give this mode precision when the angle is found by lines drawn to two distant points, the aid of the telescope is invoked This is connected with the circle in various ways, according to the nature of the instrument of which it forms a part, but, in general, we may conceive it to be essentially as follows To the tube of the telescope, *AB*, Fig 11, is attached a pivot, *C*, at right angles to the optical axis, which turns in a circular hole in the centre of the graduated circle *MN* An arm *aCb*, extending from the centre *C* to the graduations on the limb, is permanently attached to the telescope, and revolves with it To measure an angle subtended by two distant objects at the point *C*, the circle is to be brought into the plane of the objects and firmly fixed Then the telescope is

Fig 11

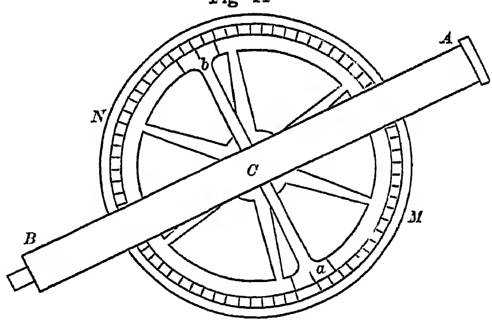

* In the sextant and other instruments of "double reflection," the vertex of the angle to be measured is not in the centre of the arc used to measure it See article "Sextant"

directed successively upon the two objects, and in each case the number of degrees indicated by a mark on either extremity of the arm *ab* is to be read off, the difference of the two readings, which is the number of degrees passed over by the arm, and, consequently, also by the telescope, will be the required measure of the angle. The same result is reached by permanently connecting the circle and telescope, which then revolve together, while a fixed mark near the limb of the circle serves to indicate the number of degrees through which the telescope revolves

In order to point the telescope with ease and accuracy upon an object, a *clamp* and *tangent screw* are commonly employed This contrivance, which may be seen upon almost every astronomical instrument, takes a great variety of forms, but in all cases the operation of it is as follows when the telescope is *approximately* pointed upon the object by hand, it is clamped in its position by a slight motion of the clamp screw, after which the telescope admits of no motion except that which is common to it *and the clamp* hence, by a fine screw which moves the clamp a slow delicate motion can be given to the telescope, whereby the sight-line marked by a thread in the focus is brought accurately upon the object

The great increase of accuracy in *pointing* a telescope which is obtained by the introduction of the spider threads in its focus brings with it the necessity of a corresponding increase of accuracy in *reading off* the number of degrees and fractions of a degree on the divided limb of the circle A single reference mark upon the extremity of an arm, as in Fig 11, enables us to determine only the number of *entire* divisions of the limb passed over, but, as this mark will generally be found between two divisions, some additional means are required for measuring the fraction of a division Two methods are now exclusively employed The first of these, in the order of invention, is

THE VERNIER *

18 Let *MN*, Fig 12, be a portion of the divided limb of a circle, *CD* the arm which revolves with the telescope about the centre of the circle The extremity of this arm is expanded

* So called after its inventor, PETER VERNIER, of France, who lived about 1630 By some it is called a *nonius*, after the Portuguese NUNEZ or NONIUS, but the invention of the latter (who died in 1577) was quite different

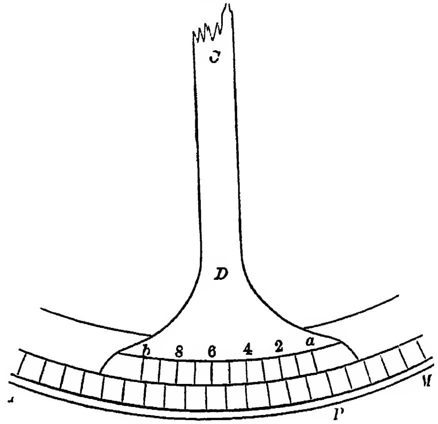

Fig 12

into an arc ab, which is concentric with the circle and is graduated into a number of divisions n which occupy the space of $n-1$ divisions of the limb Thus graduated, this small arc receives the name of a *vernier* The first stroke a is the zero of the vernier, and the reading is always to be determined by the position of this zero on the limb Let us put

d = the value of a division of the limb,
d' = the value of a division of the vernier,

then we have

$$(n-1)\,d = nd'$$

whence

$$d' = \frac{n-1}{n}\,d$$

and

$$d - d' = \frac{1}{n}\,d \qquad (7)$$

The difference $d-d'$ is called *the least count* of the vernier, which is, therefore, $\frac{1}{n}$th of a circle division If now the zero a falls between the two circle graduations P and $P+1$, the whole reading is Pd *plus* the fraction from P to a To measure this fraction, we observe that if the mth division of the vernier is in coincidence with a division of the limb, the fraction is $m \times (d-d')$ or $\frac{m}{n}d$ For example, if, as in our figure, the vernier is divided into 10 equal parts, occupying the space of 9 divisions of the limb, and if the 4th division is in coincidence, the whole reading is $Pd + \frac{4}{10}d$, and if $d = 10'$ and P corresponds to $20°\ 20'$ (P being the 122d division from the zero of the limb), then the whole reading is $20°\ 20' + \frac{4}{10} \times 10' = 20°\ 24'$ In this case the least count is $1'$ In practice, no calculation is necessary to obtain the fraction, for this is indicated by proper numbers against the graduations of the vernier itself

If the least count is given, to find n, we have

$$n = \frac{d}{d - d'}$$

d and $d - d'$ being, of course, expressed in the same unit For example, if the limb is divided to 10′, and the least count is to be 10″, we have

$$d = 600''$$
$$d - d' = 10''$$

whence

$$n = 60$$

and we must make 60 divisions of the vernier equal to 59 divisions of the limb

When a large number of divisions are made on the vernier, and the least count is very small, the graduations must be exceedingly delicate, otherwise, several consecutive divisions of the vernier may appear to be in coincidence with divisions of the limb The reading is then to be assisted by a microscope, or *reading glass*, placed over the vernier and having a lateral motion, whereby its optical axis can be brought immediately over that division of the vernier which is in coincidence

To increase the accuracy of a reading still more, two or more arms, each carrying a vernier, are employed, and the mean of the indications of all is taken The effect of reading off a circle at various points, in eliminating errors of the circle, will be treated of hereafter

The arm carrying a vernier, or the frame bearing several verniers, is often called the *alidade* Sometimes the several verniers are attached to a circle, which then receives the name of the *alidade circle*

19 We have assumed above that the divisions on the vernier are smaller than those on the limb This is the most common arrangement, but we may also have them greater by making n divisions of the vernier occupy the space of $n + 1$ divisions of the limb so that we have

$$(n + 1)\, d = nd'$$

whence the least count is, as before,

$$d' - d = \frac{1}{n}\, d$$

The only difference will be, that when the graduations of the limb proceed from right to left, those of the vernier must proceed from left to right, that is, the zero of the vernier must be the extreme left-hand stroke

20 In case a vernier has been used which is found to be too long or too short, the reading may be corrected as follows Let the error in its length be denoted by x, then (in the verniers of the ordinary form) we have (Art 18)

$$(n-1)\,d = nd' + x$$

whence

$$d - d' = \frac{1}{n}\,d + \frac{x}{n} \tag{8}$$

Hence a reading in which the fraction was $m(d - d')$ becomes $\frac{m}{n}\,d + m\,\frac{x}{n}$ The *correction* of the reading is, therefore, $+\,m\,\frac{x}{n}$ when the vernier is too short by x, and $-\,m\,\frac{x}{n}$ when it is too long by x For example, if the limb is divided to $10'$ and the vernier gives $10''$ (in which case $n = 60$), and we find that the vernier is too short by $x = +\,5''$, then we must add to every reading the correction $+\,m\,\frac{5''}{60}$, or, since every 6th graduation of the vernier gives one minute, we must add $0''.5$ for every minute read on the vernier

The actual length of the vernier is found by bringing its zero into coincidence with a division of the limb and observing where the next coincidence occurs If this second coincidence occurs at the last division of the vernier, its length is correct, but if the coincidence occurs at $\pm\,p$ divisions from the last, it is too short or too long by p times the least count This should be done at various points of the limb, and the mean of all the results taken, in order to eliminate the effect of accidental errors in the graduations of the limb

The vernier is now used chiefly on small circles and portable instruments, but when the highest degree of accuracy is sought for in reading off a circle, we have recourse to

THE READING MICROSCOPE

21 Let us conceive the arm which carried the vernier, instead of lying close to the plane of the circle, to be raised at some distance from it, and in place of the vernier let the extremity of

the arm carry a microscope AC (Plate II Fig 1), the optical axis of which is perpendicular to the plane of the circle MN and intersects the divisions on the limb The telescope and circle are to be supposed to revolve together, while the microscope remains fixed An image of the divisions is formed at the focus D of the object lens C Two lenses, B and A, constitute a positive eye piece through which this image is viewed HG is a micrometer, the interior of which is shown, enlarged, in Plate II Fig 2 A fine screw, *cc*, with a large graduated head, EF, carries the sliding frame *aa*, across which are stretched two intersecting spider threads These threads lie exactly in the focus of the microscope, and are consequently visible at the same time with the image of the divisions of the limb On one side of the field is a notched scale of teeth (which does not move with the cross-threads), the distance between the teeth being the same as that between the threads of the screw The middle notch is distinguished by a hole opposite to it, and every fifth notch is cut deeper than the rest At i (Fig 1) is an index to which the divisions of the micrometer head are referred Since one complete revolution of the micrometer head must carry the cross-threads a distance equal to the thickness of the thread of the screw, if the head is graduated into 100 parts we have the means of measuring a space equal to $\frac{1}{100}$th of the thickness of the thread of the screw Either by making the screw very fine, or increasing the number of graduations on the head, or by both, and at the same time increasing the optical power of the microscope, we can carry this subdivision of space to almost an unlimited extent

In order to understand the mode of reading the circle by this apparatus, let us conceive the intersection of the cross-threads to stand against the central notch, the zero of the micrometer being also exactly opposite the index *The point of the field then occupied by the intersection of the cross-threads is to be regarded as a fixed point of reference, and, as the telescope revolves from one position to another, the number of divisions of the limb which pass by this point will be the measure of the angular motion of the telescope* Suppose, then, the revolution has brought this point, not upon a graduation of the limb, but at a fraction of a division beyond a certain graduation P, then, to measure this fraction, we have only to move the cross-thread from the point of reference into coincidence with the graduation P, and read the number of divisions of the

micrometer head If more than one revolution of the screw is required, the whole number of revolutions will be shown by the number of notches in the field passed over by the cross-threads, and the fraction of a revolution by the micrometer head Then, knowing the relation between a division of the micrometer head and one of the circle, the value of the required fraction is at once found For example, suppose a division of the circle is equal to 5′, and that five revolutions of the micrometer screw just carry the cross-threads from one circle graduation to the next, and, further, that the micrometer head is divided into 60 equal parts, then each revolution of the screw represents 1′, and each division of the micrometer head represents 1″ If then we have made three whole revolutions, and the micrometer head reads 25 3, the required fraction is 3′ 25″ 3 If the graduation *P* was 289° 35′, the whole reading is 289° 38′ 25″ 3

The coincidence of the point of intersection of the threads with a graduation of the limb is made in the manner shown in Fig 2 In many of the German instruments, instead of a cross-thread, two very close parallel threads are used, the middle point between which is the point of reference, and a coincidence is made by bringing the circle division to bisect the space between them This bisection is, of course, estimated, but it may be effected with very great accuracy where the threads are very close Their distance should be very little greater than the breadth of the graduations of the limb BESSEL preferred the parallel threads, but it is, perhaps, doubtful whether they afford any advantage in the hands of most observers

The spiral springs *bb* serve to make the screw bear always on the same side of the thread, so that in reverse motions of the screw there is no lost or *dead* motion, that is, revolution of the screw without a corresponding movement of the cross-threads. But, to guard against the possible existence of lost motion, the coincidence of the cross-threads with a circle division should always be produced by a motion of the micrometer head in one and the same direction

22 *Error of Runs.*—When a reading microscope is in perfect adjustment, a whole number of the revolutions of the screw is equal to the distance of two consecutive graduations of the circle To effect this, provision is made for lengthening or shortening the microscope tube, and also for moving the whole microscope

farther from or nearer to the circle In this way, the magnitude of the image of a division as seen in the field can be changed until it corresponds exactly to a whole number of revolutions of the screw For example, if a whole number of revolutions is greater than the image of a circle division, the objective lens must be brought nearer to the ocular, and at the same time the whole microscope brought nearer to the circle.

But, as changes of temperature and other causes are found to produce changes in the value of a division of the microscope, and it is not expedient to be always changing the adjustment, it is usual, after making one very exact adjustment, to let it stand, and then determine from time to time the correction of a reading for any change of value which may appear The excess of a circle division above a whole number of revolutions is called *the error of runs*, and a proportional part of this excess must be allowed on all readings This error is to be found by measuring several divisions in different parts of the circle and taking the mean of all the results, in order to eliminate the effect of errors in the circle graduations themselves For example, if a division exceeds five revolutions of the screw by $+ 2''.2$, then for each minute in the fraction of a division obtained by the micrometer we must apply to the reading the correction $-\frac{2''.2}{5}$, or $-0''.44$ The error of runs will take the negative sign, and the correction for it the positive sign, when a circle division falls short of a whole number of revolutions of the screw

23 To increase the accuracy of a reading, several microscopes are used, having a fixed position relatively to each other, by which the fraction of a division in the reading is measured at different points of the circle and the mean of the different measures is taken Two microscopes are placed so as to read at opposite points of the circle, that is, the angular distance of the microscopes is 180°, or differs but little from 180°, three microscopes are placed at 120°, four at 90°, &c ; or, in general, whatever the number of microscope, they are placed so as to divide the circle into equal portions The whole degrees and minutes are read only at one of the microscopes In large instruments, where the field of the microscope takes in but a part of a degree, the number of degrees and minutes of the nearest circle division is read off by means of an index outside the microscope, or,

indeed, wholly separate from it, the microscope being used exclusively to measure the fraction of a division

24 The probable error of a reading of one microscope being ε, that of the mean of m microscopes ε_0, we have (Appendix *Method of Least Squares*)

$$\varepsilon_0 = \frac{1}{m}\sqrt{m\varepsilon^2} = \frac{\varepsilon}{\sqrt{m}}$$

that is, the probable error of the mean varies inversely as the square root of the number of microscopes For example, if the probable error of reading of one microscope is $1''$, that of the mean of two will be $\frac{1''}{\sqrt{2}} = 0''\,71$, that of four, $\frac{1''}{\sqrt{4}} = 0''\,5$, that of six, $\frac{1}{\sqrt{6}} = 0''.41$, &c , and the error will decrease but slowly as the number of microscopes increases It would require sixteen microscopes to reduce the error to $0''\,25$ On this account, the advantages of increasing the number of microscopes beyond four, except in instruments of the largest class, are usually regarded as outweighed by the greater liability of the apparatus to derangement

The use of a number of microscopes or verniers is, however, not solely to increase the accuracy of reading, but also to eliminate the errors of the circle itself, as will be seen in the following articles

ECCENTRICITY OF GRADUATED CIRCLES

25 The centre of the alidade is seldom, if ever, even in the best instruments, exactly coincident with the centre of the graduated arc To investigate the effect of such eccentricity, let C (Fig 13) be the centre of the alidade, C' that of the circle, CA a straight line joining C and the centre of one of the reading microscopes, $C'A'$ a parallel to CA When the microscope reading is at A, the true reading is at A' Let the diameter drawn through C and C' intersect the graduation at E, and let O be the zero of the graduation, which we will suppose is numbered from O towards A Put

Fig 13

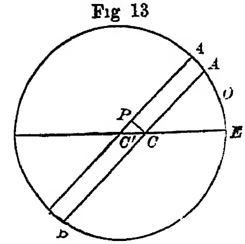

$$z = \text{the microscope reading},$$
$$z' = \text{the true reading},$$
$$E = EO,$$
$$e = \text{the eccentricity } CC',$$

It is to be assumed that such care has been bestowed upon the centring of the instrument that e is very small, and, therefore, that the arc $AA' = z' - z$ may be regarded as equal to the perpendicular CP. so that we have, since the angle $EC'A' = z' + E$,

$$z' - z = e \sin (z' + E) \tag{9}$$

in which e must be expressed in arc In the factor $\sin (z' + E)$ we may substitute z for z' without sensible error

When $z' + E = \pm 90°$, we have $z' - z = \pm e$ so that e is the maximum error of a reading, and this maximum occurs when the reading is 90° from E

26 Now, let AC and $A'C'$ be produced to meet the graduation again at the opposite points B and B', and let the alidade carry a second microscope at B The degrees and minutes may be supposed to be obtained from the microscope A, while B is used only to give the seconds Put

$$\begin{aligned} z &= \text{the division of the circle under } A, \\ A \text{ and } B &= \text{the readings of the microscopes,} \\ z' &= \text{the true reading corresponding to } A \end{aligned}$$

Then the whole reading given by A is $z + A$, and by (9) we have

$$z' = z + A + e \sin (z + E)$$

and the microscope B gives

$$180° + z' = 180° + z + B + e \sin (180° + z + E)$$

or

$$z' = z + B - e \sin (z + E)$$

The mean of the two microscopes is then

$$z' = z + \tfrac{1}{2}(A + B)$$

Hence the eccentricity is fully eliminated by taking the mean of two microscopes 180° apart In general, an even number of microscopes are employed, which are arranged in pairs, so that the mean of each pair, and, consequently, of the whole, will be free from the eccentricity.

27 The eccentricity may also be eliminated by three microscopes or verniers, whose mutual distance is 120° If $z + A$,

$120° + z + B$, $240° + z + C$ are the readings of the three microscopes, the true reading corresponding to A will be

$$\begin{aligned} z' &= z + A - e \sin(z + E) \\ z' &= z + B - e \sin(120° + z + E) \\ z' &= z + C - e \sin(240° + z + E) \end{aligned}$$

and since, by Pl Trig, we have

$$\sin(120° + z + E) + \sin(240° + z + E) = -\sin(z + E)$$

the mean of these three equations is

$$z' = z + \tfrac{1}{3}(A + B + C)$$

Indeed, it will readily be inferred from the discussion in Arts 31 and 32 that the eccentricity will be eliminated by taking the mean of any number whatever of equidistant microscopes

28 *To find the eccentricity* —The two opposite microscopes may not be perfectly adjusted at the distance of 180°, and hence we shall here put

$180° + \alpha =$ the angular distance of the microscope B from A,

and then, if we put, as before,

$z =$ the division under the microscope A,

A and $B =$ the readings of the two microscopes,

the true readings will be

$$\left.\begin{aligned} z' &= z + A + e \sin(z + E) \\ 180° + \alpha + z' &= 180° + z + B + e \sin(180° + z + E) \end{aligned}\right\} \quad (10)$$

for the second of which we take

$$z' = z + B - \alpha - e \sin(z + E)$$

If, therefore, we put

$$B - A = n$$

the difference of the two equations gives the equation of condition

$$n = \alpha + 2e \sin(z + E) \qquad (11)$$

in which α, e, and E are unknown Let the values of n be obtained from the readings of both microscopes at four equidistant

points of the circle, namely, z_0, $z_0+90°$, $z_0+180,°$ and $z_0+270°$, and denote these values by n_0, n_1, n_2, n_3, respectively then, by putting

$$P = z_0 + E,$$

we have

$$\begin{aligned}
n_0 &= \alpha + 2e \sin P &&= \alpha + 2e \sin P \\
n_1 &= \alpha + 2e \sin (P + 90°) &&= \alpha + 2e \cos P \\
n_2 &= \alpha + 2e \sin (P + 180°) &&= \alpha - 2e \sin P \\
n_3 &= \alpha + 2e \sin (P + 270°) &&= \alpha - 2e \cos P
\end{aligned}$$

whence

$$\left.\begin{aligned} 4e \sin P &= n_0 - n_2 \\ 4e \cos P &= n_1 - n_3 \end{aligned}\right\} \quad (12)$$

which determine both e and P, after which we have $E = P - z_0$ The value of α is evidently the mean of the values of n

Example

The readings of a pair of opposite microscopes of the Repsold Meridian Circle of the U S Naval Academy were as follows

z	A	B	Values of $n = B - A$
0°	$+4''\ 0$	$-\ 6''\ 7$	$n_0 = -10''\ 7$
90	$+6\ \ 9$	$-13\ \ 6$	$n_1 = -20\ \ 5$
180	$+5\ \ 3$	$-16\ \ 5$	$n_2 = -21\ \ 8$
270	$-1\ \ 2$	$-\ 1\ \ 2$	$n_3 =\ \ 0\ \ 0$

From these we obtain

$4e \sin P = +11''\ 1$	log 1 0453
$4e \cos P = -20''\ 5$	log n1 3118
$P = 151°\ 34'$	log tan P n9 7335
$e = 5''\ 83$	log $4e$ 1 3676

Hence, since $z_0 = 0°$, we have $E = 151°\ 34'$, and any single reading of the microscope A requires the correction for eccentricity

$$+ 5''\ 83 \sin (z + 151°\ 34')$$

The mean of the values of n gives $\alpha = -13''\ 25$, and the angular distance of the microscope B from A is $179°\ 59'\ 46''\ 75$

The same process may be used for any other four equidistant points of the circle, and the mean of the various results may be taken

29 With three nearly equidistant microscopes the eccentricity can be found from two complete readings at points 180° apart Let the angular distances of the microscopes B and C from A be denoted by β and γ, and, z being the division under A, put $P = z + E$, then we have, for the true reading at A,

$$z' = z + A + e \sin P$$
$$z' = z + B - \beta + e \sin (P + 120°)$$
$$z' = z + C - \gamma + e \sin (P + 240°)$$

Subtracting the first equation from the mean of the other two, and putting

$$\tfrac{1}{2}(B + C) - A = n$$

we find

$$n = \tfrac{1}{2}(\gamma + \beta) + \tfrac{3}{2} e \sin P$$

and subtracting the second from the third, and putting

$$\tfrac{1}{2}(C - B) = d$$

we find

$$d = \tfrac{1}{2}(\gamma - \beta) + \tfrac{1}{2}\sqrt{3}\, e \cos P$$

If we read a second time with the microscope A over the division $z + 180°$, and obtain the readings A', B', C', we shall have

$$\tfrac{1}{2}(B' + C') - A' = n'$$
$$\tfrac{1}{2}(C' - B') = d'$$

and since we shall have $180 + P$ instead of P, we shall obtain

$$n' = \tfrac{1}{2}(\gamma + \beta) - \tfrac{3}{2} e \sin P$$
$$d' = \tfrac{1}{2}(\gamma - \beta) - \tfrac{1}{2}\sqrt{3}\, e \cos P$$

Hence

$$e \sin P = \tfrac{1}{3}(n - n')$$
$$e \cos P = \tfrac{1}{3}\sqrt{3}\,(d - d')$$

which determine e and P We find also

$$\beta = \tfrac{1}{2}(B - A + B' - A')$$
$$\gamma = \tfrac{1}{2}(C - A + C' - A')$$

30 In order to determine the eccentricity with greater accuracy, and to eliminate, as far as possible, errors in reading and accidental errors of graduation, the circle may be read at a great number of equidistant points Each reading of a pair of opposite verniers or microscopes furnishes an equation of condition of the form (11), and from all these equations the most probable

value of the eccentricity will be deduced by the method of least squares The computation according to this method is rendered extremely simple by the application of some theorems relating to periodic functions, which, on account of their utility in this and similar investigations, will be here demonstrated

31 *Periodic Functions.*—The circumference of a circle being denoted by 2π, any commensurable fractional portion of it may be expressed by $2\pi \times \frac{p}{q} = \frac{2p\pi}{q}$, p and q being whole numbers, and the successive multiples of this fractional portion by $m \frac{2p\pi}{q}$, by supposing m to take successively the values 0, 1, 2, 3, &c If now we consider only the multiples from $m = 0$, to $m = q - 1$, we shall have the following theorems

THEOREM I — *When p is not a multiple of q,*

$$\Sigma \sin m \frac{2p\pi}{q} = 0 \tag{13}$$

$$\Sigma \cos m \frac{2p\pi}{q} = 0 \tag{14}$$

but, when p is a multiple of q,

$$\Sigma \sin m \frac{2p\pi}{q} = 0 \tag{15}$$

$$\Sigma \cos m \frac{2p\pi}{q} = q \tag{16}$$

where the summation sign Σ is used to denote the sum of all the quantities of the given form *between the given limits*, namely, from $m = 0$ to $m = q - 1$

To prove this, put

$$\cos \frac{2p\pi}{q} + \sqrt{-1} \sin \frac{2p\pi}{q} = T$$

then, by MOIVRE's formula [Pl Trig (440)],

$$\cos m \frac{2p\pi}{q} + \sqrt{-1} \sin m \frac{2p\pi}{q} = T^m$$

Taking the sum of all the expressions of this form from $m = 0$, to $m = q - 1$, we have

$$\Sigma \cos m \frac{2p\pi}{q} + \sqrt{-1}\, \Sigma \sin m \frac{2p\pi}{q} = \frac{T^q - 1}{T - 1} \tag{17}$$

But we have again, by MOIVRE's formula,

$$T^q = \cos 2p\pi + \sqrt{-1} \sin 2p\pi = 1$$

and, consequently, $T^q - 1 = 0$ The second member of the above formula, therefore, becomes zero, unless the denominator $T-1$ is zero, that is, unless $T=1$ Now, we can have $T=1$ only when $\sin\frac{2p\pi}{q} = 0$ and $\cos\frac{2p\pi}{q} = 1$, that is, only when p is a multiple of q In all other cases we have, therefore,

$$\Sigma \cos m\,\frac{2p\pi}{q} + \sqrt{-1}\,\Sigma \sin m\,\frac{2p\pi}{q} = 0$$

and, since the real and the imaginary terms must here be separately equal to zero, the first part of our theorem is established

When $T=1$, the second member of (17) becomes $\frac{0}{0}$, but is not really indeterminate, for, going back to the geometric progression of which this is the sum, we have

$$\frac{T^q - 1}{T-1} = T^0 + T^1 + T^2 + \qquad + T^{q-1} = q$$

and hence, *when p is a multiple of q*, we have

$$\Sigma \cos m\,\frac{2p\pi}{q} + \sqrt{-1}\,\Sigma \sin m\,\frac{2p\pi}{q} = q$$

which establishes the second part of the theorem

THEOREM II — *When $2p$ is not a multiple of q,*

$$\Sigma\left(\sin m\,\frac{2p\pi}{q}\right)^2 = \tfrac{1}{2}q \tag{18}$$

$$\Sigma\left(\cos m\,\frac{2p\pi}{q}\right)^2 = \tfrac{1}{2}q \tag{19}$$

but, when $2p$ is a multiple of q,

$$\Sigma\left(\sin m\,\frac{2p\pi}{q}\right)^2 = 0 \tag{20}$$

$$\Sigma\left(\cos m\,\frac{2p\pi}{q}\right)^2 = q \tag{21}$$

For we have, for any angle x,

$$\sin^2 x = \tfrac{1}{2} - \tfrac{1}{2}\cos 2x$$

and, therefore,

$$\Sigma\left(\sin m\,\frac{2p\pi}{q}\right)^2 = \Sigma\left(\tfrac{1}{2} - \tfrac{1}{2}\cos m\,\frac{4p\pi}{q}\right)$$

$$= \tfrac{1}{2}q - \tfrac{1}{2}\Sigma\cos m\,\frac{4p\pi}{q}$$

which, by Theorem I, gives either (18) or (20). Again

$$\Sigma\left(\cos m\,\frac{2p\pi}{q}\right)^2 = \Sigma\left[1-\left(\sin m\,\frac{2p\pi}{q}\right)^2\right]$$

$$= q - \Sigma\left(\sin m\,\frac{2p\pi}{q}\right)^2$$

which gives either (19) or (21)

THEOREM III.—*For all integral values of p and q we have, from $m=0$ to $m=q-1$,*

$$\Sigma \sin m\,\frac{2p\pi}{q}\cos m\,\frac{2p\pi}{q} = 0 \qquad (22)$$

for this is the same as the quantity

$$\tfrac{1}{2}\,\Sigma \sin m\,\frac{4p\pi}{q} = 0$$

32. Now, let the circle be read off by a pair of opposite microscopes, A and B, at any number of equidistant points. The circle is thus divided into a number of equal parts, each of which may be denoted by $\frac{2\pi}{q}$. If the first reading corresponds to the division z_0, the subsequent readings will correspond to $z_0+\frac{2\pi}{q}$, $z_0+2\,\frac{2\pi}{q}$, $z_0+3\,\frac{2\pi}{q}$, &c. to $z_0+(q-1)\frac{2\pi}{q}$. Each reading furnishes an equation of condition of the form (11), giving, therefore, the following system, where $P=z_0+E$.

$$n_0 = a + 2e\sin P$$

$$n_1 = a + 2e\sin\left(P+\frac{2\pi}{q}\right)$$

$$n_2 = a + 2e\sin\left(P+\frac{4\pi}{q}\right)$$

" " "

" " "

$$n_{q-1} = a + 2e\sin\left(P+\frac{2(q-1)\pi}{q}\right)$$

which are all included in the general form

$$n_m = a + 2e\sin\left(P+\frac{2m\pi}{q}\right)$$

m being taken from 0 to $q-1$.

Developing the sine in the second member, we have

$$n_m = a + 2e\sin P\cos\frac{2m\pi}{q} + 2e\cos P\sin\frac{2m\pi}{q}$$

In this form, the three unknown quantities are α, $e \sin P$, and $e \cos P$. The final equation in each unknown quantity, according to the method of least squares, is to be found by multiplying each equation of condition by the coefficient of the unknown quantity in that equation, and adding together the products. This process gives, by the aid of the theorems of the preceding article (observing that here $p = 1$),

$$\left.\begin{aligned} q\alpha &= \Sigma\, n_m \\ qe \sin P &= \Sigma\left(n_m \cos \frac{2m\pi}{q}\right) \\ qe \cos P &= \Sigma\left(n_m \sin \frac{2m\pi}{q}\right) \end{aligned}\right\} \qquad (23)$$

These formulæ embrace, as a particular case, the solution already given in Art. 28 for $q = 4$.

EXAMPLE

The following values of $n = B - A$ were obtained from the readings of two opposite microscopes of the meridian circle of the U. S. Naval Academy.

z	n	z	n	z	n	z	n
0°	− 10″ 7	90°	− 20″ 5	180°	− 21″ 8	270°	− 0″ 0
10	11 6	100	20 7	190	18 3	280	1 3
20	12 8	110	21 0	200	16 4	290	2 4
30	14 7	120	21 2	210	11 8	300	4 5
40	16 3	130	22 8	220	7 8	310	5 1
50	17 3	140	24 7	230	4 3	320	7 4
60	18 5	150	23 4	240	1 9	330	9 4
70	18 1	160	22 5	250	− 2 0	340	11 7
80	19 7	170	22 3	260	+ 0 3	350	11 6

We have here $q = 36$, and $\frac{2\pi}{q} = 10°$ so that $\frac{2m\pi}{q}$ is successively 0°, 10°, 20°, &c. We find, first, by taking the sum of all the values of n,

$$36\,\alpha = -476''\,2 \qquad\qquad \alpha = -13''\,23$$

and hence the distance of the microscope B from A was 179° 59′ 46″ 77.

To find $qe \sin P$, we multiply each n by the cosine of the angle to which it belongs, and add the products. In like manner,

$qe \cos P$ is found by multiplying each n by the sine of the angle to which it belongs, and adding the products * We thus form the following table, in which, for brevity, we put $n \cos z$ and $n \sin z$ for the quantities denoted in our formulæ (23) by $n_m \cos \frac{2m\pi}{q}$ and $n_m \sin \frac{2m\pi}{q}$

z	$n \cos z$	$n \sin z$	z	$n \cos z$	$n \sin z$
0°	− 10″ 70	− 0″ 00	180°	+ 21″ 80	+ 0″.00
10	− 11 42	− 2 01	190	+ 18 02	+ 3 .18
20	− 12 03	− 4 38	200	+ 15 41	+ 5 61
30	− 12 73	− 7 35	210	+ 10 22	+ 5 90
40	− 12 49	− 10 48	220	+ 5 98	+ 5 .01
50	− 11 12	− 13 25	230	+ 2 76	+ 3 29
60	− 9 25	− 16 02	240	+ 0 95	+ 1 65
70	− 6 19	− 17 01	250	+ 0 68	+ 1 .88
80	− 3 42	− 19 40	260	− 0 05	− 0 .30
90	0 00	− 20 50	270	0 00	0 .00
100	+ 3 59	− 20 39	280	− 0 23	+ 1 .28
110	+ 7 18	− 19 73	290	− 0 82	+ 2 26
120	+ 10 60	− 18 36	300	− 2 25	+ 3 .90
130	+ 14 66	− 17 47	310	− 3 28	+ 3 .91
140	+ 18 92	− 15 88	320	− 5 67	+ 4 .76
150	+ 20 26	− 11 70	330	− 8 14	+ 4 .70
160	+ 21 14	− 7 70	340	− 10 99	+ 4 .00
170	+ 21 96	− 3 87	350	− 11 42	+ 2 .01
Sums	+ 28 96	−225 50		+ 32 97	+ 53 .04

$36e \sin P = + \;\; 28'' 96 + 32'' 97 = + \;\; 61'' 93$ log 1.7919

$36e \cos P = - \; 225 \;\; 50 + 53 \;\; 04 = - \; 172 \;\; 46$ log $n2$ 2367

$P = 160° \; 15'$ log tan P $n9.5552$

$e = \;\; 5'' 09$ log $36e$ 2.2630

Then, since $z_0 = 0°$, we have $E = P$, and each reading of the microscope A requires the correction, for eccentricity,

$$+ 5'' 09 \sin (z + 160° \; 15') \tag{24}$$

* The several products may be taken by inspection from a traverse table, by entering the table with the angle z as a "bearing" and with n as a "distance," and taking out the corresponding "difference of latitude" and "departure," which will be, respectively, the products required in forming $qe \sin P$ and $qe \cos P$

ELLIPTICITY OF THE PIVOT OF THE ALIDADE.

33 If the pivot of the alidade is the horizontal axis of a vertical circle, as in the case of some meridian circles, or if, as in other cases, the alidade is fixed to a pier while the pivot of the horizontal axis of the circle revolves in a V, then any defect in the pivot, which renders a section at right angles to its axis other than a circle, will cause the centre of the alidade to vary its distance from the centre of the graduated circle during a revolution of the instrument If the section of the pivot is any *regular* figure, the variations in the readings of a single microscope may be regarded as a function of the division (z) which is under the microscope, and the correction of this reading may be denoted by $\varphi(z)$ The correction of the reading of the opposite microscope must be $-\varphi(z)$ In order to investigate the form of the pivot without involving the errors of eccentricity or of graduation, let us denote the correction of the division z for both these errors by $\psi(z)$, and that of the division $180° + z$, which is under the opposite microscope, by $\psi(180° + z)$ Then, A and B being the readings of the microscopes, and $180° + \alpha$ their constant distance from each other, we have

$$z' = z + A \quad + \quad \varphi(z) + \psi(z)$$
$$z' = z + B - \alpha - \varphi(z) + \psi(180° + z)$$

whence

$$0 = B - A - \alpha - 2\varphi(z) - \psi(z) + \psi(180° + z)$$

Now, let the division $180° + z$ be brought under the microscope A, and let A' and B' be the microscope readings, then we have the true reading z'' by the equations

$$z'' = 180° + z + A' \quad + \varphi(180° + z) + \psi(180° + z)$$
$$z'' = 180 \;\; + z + B' - \alpha - \varphi(180° + z) + \psi(z)$$

whence

$$0 = B' - A' - \alpha - 2\varphi(180° + z) + \psi(z) - \psi(180° + z)$$

therefore, if we put

$$\tfrac{1}{2}(B - A + B' - A') = n'$$

we have

$$n' = \alpha + \varphi(z) + \varphi(180° + z) \tag{25}$$

the errors of eccentricity and of graduation being wholly elimi-

nated. The form of the function φ is yet to be determined, since, however, it necessarily returns to the same value after one complete revolution, we may assume for it a general periodic series, namely

$$\varphi(z) = f' \sin(z + F') + f'' \sin(2z + F'') + f''' \sin(3z + F''') + \&c$$

in which f', F', f'', F'', f''', F''', &c are constants Hence also

$$\varphi(180^\circ + z) = -f' \sin(z + F') + f'' \sin(2z + F'') - f''' \sin(3z + F''') + \&c$$

and

$$\varphi(z) + \varphi(180^\circ + z) = 2f'' \sin(2z + F'') + 2f^{\mathrm{iv}} \sin(4z + F^{\mathrm{iv}}) + \&c \quad (26)$$

The combination of two readings 180° apart gives, therefore, the equation of condition

$$n' = \alpha + 2f'' \sin(2z + F'') + 2f^{\mathrm{iv}} \sin(4z + F^{\mathrm{iv}}) + \&c \qquad (27)$$

If we have read the circle at $2q$ equidistant points, so that the number of such equations is q, then the values of z are successively $0, \frac{\pi}{q}, \frac{2\pi}{q}, \quad \frac{(q-1)\pi}{q}$, and the general form of the equation of condition is

$$n'_m = \alpha + 2f'' \sin\left(m \frac{2\pi}{q} + F''\right) + 2f^{\mathrm{iv}} \sin\left(m \frac{4\pi}{q} + F^{\mathrm{v}}\right) + \&c \qquad (28)$$

m being taken from 0 to $q - 1$ If we treat these equations by the method of least squares, we shall readily find, by the aid of the theorems of Art 31,

$$\left.\begin{aligned}
q\alpha &= \Sigma n'_m \\
q f'' \sin F'' &= \Sigma\left(n'_m \cos m \frac{2\pi}{q}\right) \\
q f'' \cos F'' &= \Sigma\left(n'_m \sin m \frac{2\pi}{q}\right) \\
q f^{\mathrm{iv}} \sin F^{\mathrm{iv}} &= \Sigma\left(n'_m \cos m \frac{4\pi}{q}\right) \\
q f^{\mathrm{iv}} \cos F^{\mathrm{iv}} &= \Sigma\left(n'_m \sin m \frac{4\pi}{q}\right) \\
\&c \qquad & \qquad \&c
\end{aligned}\right\} \qquad (29)$$

EXAMPLE.

To investigate the form of the alidade pivot of the meridian circle, in the example of Art 32, the readings there given are combined as follows

z	$B - A$	$B' - A'$	n'	z	$B - A$	$B' - A'$	n'
0°	− 10″ 7	− 21″ 8	− 16″ 25	90°	− 20″ 5	− 0″ 0	− 10″ 25
10	11 6	18 3	14 95	100	20 7	1 3	11 00
20	12 8	16 4	14 60	110	21 0	2 4	11 70
30	14 7	11 8	13 25	120	21 2	4 5	12 85
40	16 3	7 8	12 05	130	22 8	5 1	13 95
50	17 3	4 3	10 80	140	24 7	7 4	16 05
60	18 5	1 9	10 20	150	23 4	9 4	16 40
70	18 1	− 2 0	10 05	160	22 5	11 7	17 10
80	19 7	+ 0 3	9 70	170	22 3	11 6	16 95

Since here $q = 18$, the sum of the values of n' gives

$$18\,a = -\,238''\,10 \qquad a = -\,13''\,23$$

Then, with the aid of a traverse table, we find the values of $n' \cos 2z$ and $n' \sin 2z$, as below

z	$n' \cos 2z$	$n' \sin 2z$	z	$n' \cos 2z$	$n' \sin 2z$
0°	− 16″ 25	− 0″ 00	90°	+ 10″ 25	+ 0″ 00
10	− 14 05	− 5 12	100	+ 10 34	+ 3 76
20	− 11 18	− 9 38	110	+ 8 96	+ 7 52
30	− 6 63	− 11 48	120	+ 6 43	+ 11 13
40	− 2 09	− 11 87	130	+ 2 42	+ 13 74
50	+ 1 88	− 10 64	140	− 2 79	+ 15 81
60	+ 5 10	− 8 83	150	− 8 20	+ 14 20
70	+ 7 70	− 6 46	160	− 13 10	+ 10 99
80	+ 9 12	− 3 32	170	− 15 93	+ 5 80
Sums	− 26 40	− 67 10		− 1 62	+ 82 95

$$18\,f'' \sin F'' = -\ 28''\,02 \qquad \log\ n1\ 4475$$
$$18\,f'' \cos F'' = +\ 15\ 85 \qquad \log\ \ 1\ 2000$$
$$F'' = 299°\ 30' \qquad \log \tan F''\ n0\ 2475$$
$$f'' = 1''\ 79 \qquad \log 18\,f''\ \ 1\ 5078$$

in the same manner, we find, from the sums of the products $n' \cos 4z$ and $n' \sin 4z$,

$$\begin{aligned} 18 f^{iv} \sin F^{iv} &= +\ 0''\ 15 \\ 18 f^{iv} \cos F^{iv} &= +\ 2''\ 00 \\ F^{iv} &= \quad 4^\circ\ 17' \\ f^{iv} &= \quad 0''\ 11 \end{aligned}$$

Hence we have

$$\varphi(z)+\varphi(180^\circ+z)=3''\ 58 \sin(2z+299^\circ\ 30')+0''\ 22 \sin(4z+4^\circ\ 17') \quad (30)$$

The term in $4z$ is so small that we may suppose that it proceeds from the accidental errors of reading, and *irregularities* of the pivot, and we may, therefore, disregard it, as well as the subsequent terms in $6z$, &c

Bessel has shown* that if the section of a pivot which rests in a V is an ellipse, the centre of this ellipse will, as the instrument revolves, move in the arc of a circle the centre of which is the angular point of the V †, that during a complete revolution the centre of the ellipse describes this arc four times,—twice forwards and twice backwards, and that the effect of this motion upon the reading of a single microscope is expressed by a term depending upon $2z$

Hence, the last term of (30) being neglected, the remaining term may be regarded as the effect of ellipticity of the pivot, and, since we must then have $\varphi(z) = \varphi(180^\circ + z)$, it follows that

$$\varphi(z) = 1''\ 79 \sin(2z + 299^\circ\ 30') \quad (31)$$

Upon the hypothesis that the pivot is elliptical, the observed values of n' should satisfy the equation (27), which in the present case becomes

$$n' = -\ 13''.23 + 3''\ 58 \sin(2z + 299^\circ\ 30')$$

at least within the errors of reading To show that this hypothesis explains the observations in the present case sufficiently well, the following comparison is made, in which the value of n' computed by the preceding formula is denoted by C, the observed value by O, the residual error, or $O - C$, by v

---

* *Astronomische Beobachtungen auf der Sternwarte in Königsberg*, Vol I p xii

† Provided the angle of the V is ninety degrees

z	O	C	v	vv	z	O	C	v	vv
0°	−16″ 25	−16″ 35	+0″ 10	0 0100	90°	−10″ 25	−10″ 11	−0″ 14	0 0196
10	14 95	15 55	+0 60	3600	100	11 00	10 91	−0 09	0081
20	14 60	14 48	−0 12	0144	110	11 70	11 98	+0 28	0784
30	13 25	13 26	+0 01	0001	120	12 85	13 20	+0 35	1225
40	12 05	12 03	−0 02	0004	130	13 95	14 43	+0 48	2304
50	10 80	10 95	+0 15	0225	140	16 05	15 51	−0 54	2916
60	10 20	10 15	−0 05	0025	150	16 40	16 31	−0 09	0081
70	10 05	9 71	−0 34	1156	160	17 10	16 75	−0 35	1225
80	9 70	9 70	0 00	0000	170	16 95	16 76	−0 19	0361

If we denote the mean error of a single observed value of n' by ε, we have (Appendix, *Method of Least Squares*), q being the number of observations,

$$\varepsilon = \sqrt{\left(\frac{\Sigma(vv)}{q-1}\right)} = \sqrt{\frac{1\ 4428}{17}} = 0''\ 29$$

and this quantity also expresses the mean error of a single reading of one microscope of this instrument This mean error of a reading was also found by comparing a number of successive readings of the same microscope on the same division, which gave 0″ 36: so that the agreement of the above computed and observed values of n' is even closer than is necessary to sustain the hypothesis of an elliptical form of the pivot. It is also evident that the addition of the term $0''\ 22 \sin(4z + 4° 17')$ of (30) would but slightly reduce the mean error of n'

34. The error introduced by the ellipticity of the pivot, like that produced by the eccentricity of the circle, is fully eliminated by taking the mean of the readings of a pair of opposite microscopes If, however, the arms of the alidade, carrying the microscopes, do not preserve a constant inclination to the horizon during a revolution of the instrument, the readings of both microscopes will be increased or diminished by the whole amount of the change of inclination, and, consequently, their mean will involve the same error A level placed on the alidade is usually employed to determine these changes of inclination, and the readings are finally corrected according to its indications

ERRORS OF GRADUATION

35 Errors of graduation of a divided circle may be either *regular* or *accidental*.

The regular or periodic errors are those which recur at regular intervals according to some law, and which may, therefore, be expressed as functions of the reading itself. Even the error of eccentricity, above considered, may be treated as such a periodic error of graduation, since its effect upon the reading (z) is the same as if the graduation everywhere required the correction $e \sin(z + E)$. The sum of all the corrections for such periodic errors, regarded as a function of the reading (z), and denoted by $\psi(z)$, must have the general form

$$\psi(z) = u' \sin(z + U') + u'' \sin(2z + U'') + u''' \sin(3z + U''') + \&c. \quad (32)$$

in which u', U', u'', U'', &c. are constants. The shorter the period of any error, the higher is the multiple of z in the term representing it.

Now, let the circle be read by q microscopes at q equidistant points, namely, at all the points expressed by

$$z_m = z + m \frac{2\pi}{q}$$

m being taken successively 0, 1, 2, 3 ... ($q - 1$), and z being the reading of the first microscope, then we shall have, for the correction of any one of these microscopes, the general expression

$$\psi(z_m) = u' \sin\left(z + U' + m \frac{2\pi}{q}\right) + u'' \sin\left(2z + U'' + m \frac{4\pi}{q}\right) + \&c.$$

The discussion of this series will be abridged if we express it under the following general form

$$\psi(z_m) = \Sigma_p u^{(p)} \sin\left(pz + U^{(p)} + m \frac{2p\pi}{q}\right)$$

in which p is successively 1, 2, 3, &c., and Σ_p denotes the sum of all the terms thus found. Developing the sine, this gives

$$\psi(z_m) = \Sigma_p u^{(p)} \sin(pz + U^{(p)}) \cos m \frac{2p\pi}{q} + \Sigma_p u^{(p)} \cos(pz + U^{(p)}) \sin m \frac{2p\pi}{q}$$

The mean of the q microscopes will, therefore, require the correction

$$\frac{1}{q} \sum_{m=0}^{m=q-1} \psi(z_m) = \frac{1}{q} \Sigma_p \left[u^{(p)} \sin(pz + U^{(p)}) \sum_{m=0}^{m=q-1} \cos m \frac{2p\pi}{q} \right]$$

$$+ \frac{1}{q} \Sigma_p \left[u^{(p)} \cos(pz + U^{(p)}) \sum_{m=0}^{m=q-1} \sin m \frac{2p\pi}{q} \right]$$

But we have (Art 31), from $m=0$ to $m=q-1$, $\Sigma \sin m \frac{2p\pi}{q} = 0$ in all cases, and also $\Sigma \cos m \frac{2p\pi}{q} = 0$, except when p is a multiple of q, or $p = iq$, in which case this latter sum is equal to q. Hence all the terms of the above expression which do not vanish are expressed by the formula

$$\frac{1}{q} \sum_{m=0}^{m=q-1} \psi(z_m) = \Sigma_{iq}\, u^{(iq)} \sin (i q z + U^{(iq)}) \qquad (33)$$

i being successively the integers 1, 2, 3 , whence the following important theorem *The terms of the periodic series not eliminated by taking the mean of q equidistant microscopes are those only which involve the multiples of q.*

Thus, the mean of two microscopes requires a correction of the form

$$u'' \sin (2z + U'') + u^{iv} \sin (4z + U^{iv}) + \&c\,,$$

the mean of three microscopes, the correction

$$u''' \sin (3z + U''') + u^{vi} \sin (6z + U^{vi}) + \&c\,,$$

the mean of four microscopes, the correction

$$u^{iv} \sin (4z + U^{iv}) + u^{viii} \sin (8z + U^{viii}) + \&c$$

&c &c

36 The values of the terms of the periodic series which are eliminated by means of a number of microscopes may be found from the readings of these microscopes themselves Thus, for two microscopes, the readings of which at the divisions z and $z + 180°$ are A and B, and whose angular distance is $180° + \alpha$, we have

$$\begin{aligned} z' &= z + A \qquad\quad + \psi(z) \qquad\qquad + \varphi(z) \\ z' &= z + B - \alpha + \psi(z + 180°) - \varphi(z) \end{aligned}$$

in which $\varphi(z)$ is the correction for the form of the pivot (Art 33) Hence, putting $B - A = n$, we have

$$n = \alpha + \psi(z) - \psi(z + 180°) + 2\varphi(z)$$

But we have

$$\psi(z) = u' \sin (z + U') + u'' \sin (2z + U'') + u''' \sin (3z + U''') + \&c$$

and hence, substituting $z + 180°$ for z,

$$\psi(z+180°) = -u' \sin(z + U') + u'' \sin (2z + U'') - u''' \sin(3z + U''') + \&c$$

For $\varphi(z)$ we have already found the form $f'' \sin(2z + F'')$, and therefore the value of n becomes

$$n = \alpha + 2u' \sin(z + U') + 2f'' \sin(2z + F'') + 2u''' \sin(3z + U''') + \&c \quad (34)$$

The readings being made for successive values of z expressed generally by

$$z_m = m \frac{2\pi}{q}$$

we have q equations of condition of the form

$$n_m = \alpha + 2u' \sin\left(m \frac{2\pi}{q} + U'\right) + 2f'' \sin\left(m \frac{4\pi}{q} + F''\right) + \&c \quad (35)$$

m being taken equal to 0, 1, 2, 3 . . . $q-1$, successively. The solution of these equations by the method of least squares gives

$$q\alpha = \Sigma n_m$$

$$qu' \sin U' = \Sigma\left(n_m \cos m \frac{2\pi}{q}\right) = \Sigma(n_m \cos z_m)$$

$$qu' \cos U' = \Sigma\left(n_m \sin m \frac{2\pi}{q}\right) = \Sigma(n_m \sin z_m)$$

$$qf'' \sin F'' = \Sigma\left(n_m \cos m \frac{4\pi}{q}\right) = \Sigma(n_m \cos 2z_m)$$

$$qf'' \cos F'' = \Sigma\left(n_m \sin m \frac{4\pi}{q}\right) = \Sigma(n_m \sin 2z_m)$$

$$qu''' \sin U''' = \Sigma\left(n_m \cos m \frac{6\pi}{q}\right) = \Sigma(n_m \cos 3z_m)$$

$$qu''' \cos U''' = \Sigma\left(n_m \sin m \frac{6\pi}{q}\right) = \Sigma(n_m \sin 3z_m)$$

&c &c &

Example

The values of n given on page 45 for thirty-six readings of the Meridian Circle of the Naval Academy give, by the preceding formulæ, $\alpha = -13''.23$ and

$U' = 160° 15'$, $F'' = 299° 30'$, $U''' = 68° 19'$
$u' = 5''.09$, $f'' = 1''.79$, $u''' = 0''.69$

The difference of the readings of the two microscopes A and B of this circle is therefore represented by the formula

$$n = -13''.23 + 10''.18 \sin(z + 160° 15') + 3''.58 \sin(2z + 299° 30') + 1''.38 \sin(3z + 68° 19')$$

of which the terms in z and $2z$ of course agree with those before found for the eccentricity and for the ellipticity of the pivot of the alidade

If now we compute the values of n by this formula for every $10°$, we shall find that they agree with the observed values given on page 45 within quantities which in almost every instance are less than $1''$ From this agreement we may presume that this circle is very accurately graduated throughout.

37 In a similar manner, the terms of the periodic series which do not involve the multiples of $4z$ can be found from the readings of four microscopes. If A, C, B, D are these readings at the divisions z, $z + 90°$, $z + 180°$, $z + 270°$ respectively, and if $180° + \alpha$ is the distance of the microscope B from A, while $180° + \gamma$ is that of D from C, then the mean of the readings of A and B gives

$$\begin{aligned} z' &= z + \tfrac{1}{2}(A + B) - \tfrac{1}{2}\alpha + \tfrac{1}{2}[\psi(z) + \psi(z + 180°)] \\ &= z + \tfrac{1}{2}(A + B) - \tfrac{1}{2}\alpha + u'' \sin(2z + U'') + u^{iv} \sin(4z + U^{iv}) + \&c \end{aligned}$$

and, consequently (exchanging z for $z + 90°$), the mean of the readings of C and D gives

$$z' = z + \tfrac{1}{2}(C + D) - \tfrac{1}{2}\gamma - u'' \sin(2z + U'') + u^{iv} \sin(4z + U^{iv}) - \&c$$

Taking the difference of these equations, and putting

$$\begin{aligned} n &= \tfrac{1}{2}(C + D) - \tfrac{1}{2}(A + B) \\ \beta &= \tfrac{1}{2}(\gamma - \alpha) \end{aligned}$$

we have the equation of condition

$$n = \beta + 2u'' \sin(2z + U'') + 2u^{vi} \sin(6z + U^{vi}) + \&c \qquad (36)$$

and from the q equations of this form we derive β, u'', U'', &c by the process already employed

The terms in z and $3z$ may be found from either pair of microscopes as in the preceding article.

38 *The accidental errors* of graduation are those which follow no regular law, and may with equal probability occur at any given division with either the positive or the negative sign An error of this kind in any division is to be regarded as peculiar to that division, and, therefore, as having no analytical connection with other errors of the same kind The use of a number of

microscopes tends to reduce the effect of such errors, without entirely eliminating them, for (as in Art 24) if ε is the probable accidental error of a division, the probable accidental error in the mean of m microscopes will be $\frac{\varepsilon}{\sqrt{m}}$

The general character of the graduation, as to its freedom from accidental errors, may be judged of by comparing the values of the n of the preceding articles, computed from the terms of the periodic series, with their observed values The differences will be composed of both errors of reading and accidental errors, which may be separated by employing an independent determination of the probable error of reading Thus, if we have $n = B - A$, and have found the probable error of an observed value of n to be ε, and then, if we put

$\varepsilon_1 =$ the probable error of a single reading,
$\varepsilon_2 =$ " " " " division,

the probable error of either A or B will be $\sqrt{(\varepsilon_1^2 + \varepsilon_2^2)}$, and that of $B - A$ will be $\sqrt{2(\varepsilon_1^2 + \varepsilon_2^2)}$, whence

$$\varepsilon^2 = 2(\varepsilon_1^2 + \varepsilon_2^2)$$

which will determine ε_2 when ε and ε_1 have been found

39 The accidental error of any division of the circle may be directly found by means of an additional microscope which can be set and securely clamped at any given distance from the regular or fixed microscopes. Let us denote this movable microscope by M, and let it be proposed to determine the error of the division z Bring the division 0° under the microscope A, and clamp the movable microscope M over the division z Let the true angular distance of M from A (which is as yet unknown) be denoted by $z + \mu$, and let the readings of the two microscopes, referred to the divisions 0 and z respectively, be called A and M, then, z denoting the nominal value and z' the true value of the arc from 0 to z, we shall have

$$z + \mu = z' + M - A$$

and the correction of the graduation z will be

$$z' - z = \mu - (M - A)$$

or rather, since every division (and, therefore, 0° included) may

be regarded as an error, this will be the difference of the corrections of the graduations 0 and z, and we may write

$$\varphi(z) - \varphi(0) = \mu - (M - A) \tag{37}$$

in which $\varphi(z)$ denotes the total correction of a division for both periodic and accidental errors The periodic errors being known from previous investigation, the accidental error may be separated

Now, to find the constant distance μ, we resort to the well known method of *repetition* First, bring any arbitrarily selected division Z under the microscope A, then $Z + z$ will be under M, let the readings of the two microscopes be A' and M' respectively Then bring the division $Z + z$ under A, and, consequently, the division $Z + 2z$ under M, and let the readings be A'' and M'' In this way, let m repetitions be made, the microscope A being successively placed upon the divisions Z, $Z + z$, $Z + 2z$, . . . $Z + (m - 1)z$, and M successively upon $Z + z$, $Z + 2z$, $Z + 3z$, . . . $Z + mz$, then we have, as in (37),

$$\begin{aligned}
\varphi(Z + z) - \varphi(Z) &= \mu - (M' - A') \\
\varphi(Z + 2z) - \varphi(Z + z) &= \mu - (M'' - A'') \\
\varphi(Z + 3z) - \varphi(Z + 2z) &= \mu - (M''' - A''') \\
&\cdots \\
\varphi(Z + mz) - \varphi(Z + (m - 1)z) &= \mu - (M^{(m)} - A^{(m)})
\end{aligned}$$

The mean of all these equations is

$$\frac{1}{m}[\varphi(Z + mz) - \varphi(Z)] = \mu - \frac{1}{m}\Sigma(M - A)$$

If the number m is large, the mth part of the difference of the accidental errors of the extreme divisions Z and $Z + mz$ may be regarded as evanescent, and then, if we regard the first member as composed only of the periodic errors already found, we shall have

$$\mu = \frac{1}{m}\Sigma(M - A) + \frac{1}{m}[\psi(Z + mz) - \psi(Z)] \tag{38}$$

where the function ψ denotes a periodic error, as in Art 35 If this process be repeated a number of times, each time commencing at a different division, the mean of all the values of μ may be regarded as entirely free from the effect of the accidental errors of the first and last divisions Thus, μ being found, the correction of the division (z) becomes known by (37)

If z is an aliquot part of the circumference $= \frac{2\pi}{m}$, we shall have

$\varphi(Z + mz) = \varphi(Z)$, since we have returned to the same division; and the value of μ is then rigorously

$$\mu = \frac{1}{m} \Sigma (M - A)$$

Thus, the fixed microscopes themselves, whose distance is $\frac{2\pi}{q}$, may be at once employed in this manner (without an additional microscope) to determine the errors of the divisions whose mutual distance is $\frac{2\pi}{q}$ If then we have four fixed microscopes and one movable one M placed at the distance z from A, we shall be able to find 1st, the errors of the four cardinal divisions 0°, 90°, 180°, and 270°, by the fixed microscopes, 2d, the errors of the divisions z, $90° + z$, $180° + z$, $270° + z$, by placing the microscope A successively upon 0°, 90°, 180°, and 270°, and reading M, 3d, the errors of the divisions $90° - z$, $180° - z$, $270° - z$, and $360° - z$, by placing M successively upon 90°, 180°, 270°, and 360°, and reading A Thus, after the errors of the four cardinal divisions are known, the operation just described gives the errors of eight divisions. A second operation with the microscope M at the distance z_1 from A gives in like manner the errors of eight more divisions, $\pm z_1$, $90° \pm z_1$, $180° \pm z_1$, $270° \pm z_1$, and, moreover, the errors of the divisions $\pm z \pm z_1$, $90° \pm z \pm z_1$, $180° \pm z \pm z_1$, $270° \pm z \pm z_1$, by placing the microscope A over $\pm z$, $90° \pm z$, &c successively while M is over $\pm z + z_1$, $90° \pm z + z_1$, &c, or placing M over $\pm z$, $90° \pm z$, &c successively while A is over $\pm z - z_1$, $90° \pm z - z_1$, &c By judiciously combining all the observations of this kind, the corrections of each degree of the circle may be found

In order to eliminate the effect of changes in the angular distance of the fixed and movable microscopes occurring during the observations and produced chiefly by changes of temperature, it is proper to repeat each series of observations at a given distance z *backwards*, commencing this repetition by placing the movable microscope M over the last division $Z + mz$ and the fixed one A over $Z + (m - 1)z$, and so returning to the first assumed division Z Also the readings on the eight divisions to be determined should be made several times, say, once before the first or *forward* repetition series, again, between the two repetition series, and finally, after the second or *backward* repetition series Thus, the whole operation will embrace

1st Observations on the eight divisions,
2d Repetition series *forwards*,
3d Observations on the eight divisions,
4th Repetition series *backwards*,
5th Observations on the eight divisions

By this symmetrical arrangement, the mean of the three determinations of the errors of the eight divisions corresponds to the mean state of the apparatus as found from the mean of the two repetition series.*

THE FILAR MICROMETER

40 For the measurement of small angles, not greater than the angular breadth of the field of the telescope, graduated circles may be wholly dispensed with, and a micrometer attached to the eye end of the telescope may be substituted with great advantage both in respect of accuracy and facility of manipulation Indeed, for many purposes to which the micrometer is adapted, divided circles are entirely out of the question, for example, the measurement of the angular distance between the two components of a double star.

Micrometers, however, are very frequently used in combination with graduated circles, as in the meridian circle.

41 *The filar micrometer* is the same in principle as the micrometer employed in the reading microscope (Art 21), only more elaborate and complete when intended to be used at the focus of a large telescope It is variously constructed, according to the instrument with which it is to be connected A very common form which involves the essential features of all the others is sketched in Plate II Fig 3, where the outside plate and the eye piece are removed and the field of view exhibited The plate *aa* is permanently attached to the eye end of the telescope tube at right angles to the optical axis The plate *bb*, carrying the thread *mm*, slides upon *aa*, and is moved by the screw *B* The plate *cc*, carrying the thread *nn*, slides upon *bb*, and is moved by the screw *C* The threads are at right angles to the

* This process, which is due to BESSEL, will be found more fully discussed in the *Konigsberg Observations*, Vol VII, and in the *Astron Nach*, Nos 481 and 482 See also C A F PETERS, *Untersuchung der Theilungsfehler des Ertelschen Verticalkreises der Pulkowaer Sternwarte* (St Petersburg, 1848), and HANSEN in the *Astron Nach*, No 338

direction of the motion produced by the screws. Their distance apart is changed only by the screw C, which carries a large graduated head, by means of which this distance is measured. The screw B merely shifts the whole apparatus bb, so that the threads may be carried to any part of the field of view. A notched scale in the field of view, the notches of which are at the same distance apart as the threads of the screw C, is attached either to the plate bb, or to the plate aa (in the figure, to the latter); in either case the number of notches between the threads indicates the whole number of revolutions of the screw by which the threads are separated, while the graduated head of C indicates the fraction of a revolution. Finally, at least one thread is stretched across the middle of the field at right angles to the micrometer threads; sometimes three or more equidistant and parallel threads; these are usually attached to the plate bb. In micrometer measures the thread mm usually remains fixed while nn moves; the former is therefore usually called the *fixed* thread, and the latter the *movable* thread. The threads at right angles to these are called *transverse* threads; sometimes *transit* threads.

That portion of the telescope to which the micrometer is immediately attached is a tube which both slides and revolves within the main tube of the telescope, so that (by sliding) the plane of the threads may be accurately placed in the focus of the object glass, and (by revolving) the threads may be made to take any required direction.

To measure directly the angular distance between two objects whose images are seen in the field, we have first to revolve the whole micrometer until the middle transverse thread passes through the two objects; then, bringing the fixed thread upon one of the objects and the movable thread upon the other, the distance is at once obtained in revolutions and parts of a revolution of the micrometer screw. This measure is then to be reduced to seconds of arc, for which purpose the angular value of a revolution of the screw must be known.

42. *To find the angular value of a revolution of the micrometer screw.*—This value evidently depends not only upon the distance of the threads of the screw, but also upon the focal length of the telescope, since the greater the focal length, the larger will be the image of any given object.

A FIRST METHOD of finding the value of the screw is, therefore, to measure the focal length, F, of the object glass, and the distance, m, between the threads of the screw (which is done by counting the number of threads to an inch), then, if R denotes the angular value of a revolution, we have

$$\tan \tfrac{1}{2}R = \frac{\tfrac{1}{2}m}{F} \qquad \text{or} \qquad R = \frac{m}{F \sin 1''} \tag{39}$$

as is evident from Fig 2, p 13, where we may suppose dl, at the focus of the lens AB, to be the space through which the micrometer thread is moved by a revolution of the screw, and the angular breadth of the object DL, of which dl is the image, to be $DCL = lCd$, and $Cm = F$, $dl = m$

43 SECOND METHOD —Measure with the micrometer any previously known angle A, and let M be the number of revolutions of the screw in the measure, then, assuming that the middle point of A is observed in the middle of the field,

$$\tan R = \frac{2 \tan \tfrac{1}{2}A}{M} \qquad \text{or, nearly,} \qquad R = \frac{A}{M} \tag{40}$$

The sun's apparent horizontal diameter (see Vol I Art 134) may be used for the angle A, if the field is sufficiently large to embrace the whole image of the sun, which, however, is the case only with small instruments, or with low magnifying powers.

The constellation of the *Pleiades* furnishes pairs of stars at various distances, suited to instruments of various capacities and BESSEL determined their distances with very great accuracy with a view to this as well as other applications *

The angle A in (40) is the *apparent* angular distance measured, so that, when two stars are employed, their apparent distance must be computed by subtracting the correction for refraction, for which see Chapter X

44 THIRD METHOD —Point the telescope at a star, and let the micrometer be revolved so that the transverse thread will coincide with the apparent path of the star in its diurnal movement, and the fixed micrometer thread will represent a declination circle Place the movable thread at any number M of revolutions

* BESSEL'S *Astronomische Untersuchungen*, Vol I p 209

from the fixed thread, and note the times of transit of the star over these threads by the sidereal clock, the telescope remaining fixed during the whole observation Denote the sidereal interval between these times by I, the declination of the star by δ, the true angular interval of the threads by $\imath$, then (as will be proved in the theory of the transit instrument) we shall find $\imath$ by the formula

$$\sin \imath = \sin I \cos \delta \tag{41}$$

or, when the star is not within 10° of the pole,

$$\imath = I \cos \delta \tag{41*}$$

after which the value of a revolution of the screw in seconds of arc is found by the formula

$$R = \frac{15 \imath}{M} = \frac{15 I \cos \delta}{M} \tag{42}$$

For extreme precision, the correction for refraction should be applied to $\imath$; but if the observations are made near the meridian the correction will rarely be appreciable.

We may in this process dispense with the use of the fixed thread by setting the movable thread successively at different points in the field, and noting the times of transit of the star over it together with the number of revolutions of the screw between the successive positions In this way the regularity of the screw may be tested throughout its whole length If the star is very near the pole, each observation should be compared with that made near the middle of the field, and the true intervals computed by the formula $\sin \imath = \sin I \cos \delta$

This method is applicable in all cases where the micrometer can be revolved so as to place the fixed and movable threads in the direction of a declination circle If the telescope is equatorially mounted, this can be done in all positions of the instrument, and the star may be in any part of the heavens, but a slow moving star near the meridian is to be preferred, if we wish to avoid the correction for refraction

The times of transit are supposed to be observed by a sidereal clock, the rate of which if it is large should be allowed for. If the time is noted by a mean time clock, the mean intervals are to be converted into sidereal intervals (Vol. I Art 49)

45 If the micrometer is attached to an instrument designed only for the measurement of zenith distances, or differences of zenith distance (as in the case of the Zenith Telescope), the movable threads being always perpendicular to a vertical circle, we can still employ this method of transits, by observing the pole star, or any star near the pole, at the time of its *greatest elongation* At this time the vertical circle of the star is tangent to its diurnal circle, and, consequently, the micrometer thread will coincide in direction with this declination circle, as required in the preceding method If the instrument is not moved in azimuth during the star's transit through the field, the formula for computing the interval i from the sidereal interval I is still, as in the transit instrument, $\sin i = \sin I \cos \delta$, but it must be observed that this formula here applies strictly only to the case where the thread is at one time at the point of greatest elongation, and therefore each observation should be compared with that taken nearest the computed time of elongation To find this time, we first find the hour angle t of the star by the formula (Vol I Art 18)

$$\cos t = \cot \delta \tan \varphi$$

in which φ is the latitude of the place of observation, and then, α being the star's right ascension, we have

$$\text{Sid T of gr elongation} = \alpha \pm t$$

the lower sign for the eastern elongation

If the instrument is slowly moved in azimuth as the star crosses the field, so as to make each observation of a transit in the middle of the field, the vertical distances between the different positions of the movable thread are, rigorously, differences of zenith distance, and the formula for the transit instrument is no longer strictly applicable I shall show, however, that it is practically sufficiently exact Let the zenith distance, hour angle, and azimuth of the star at the elongation be denoted by z_0, t_0, and A_0 respectively, those for any observation by z, t, A; and let A_0 and A be reckoned from the elevated pole At the time of the observation, the star, the zenith, and the pole form an oblique spherical triangle, and we have the general relations

$$\cos \delta \cos t = \cos \varphi \cos z - \sin \varphi \sin z \cos A$$
$$\cos \delta \sin t = \sin z \sin A$$

At the elongation the triangle becomes right angled at the star, and we have

$$\cos t_0 = \cos z_0 \sin A_0$$

$$\sin t_0 = \frac{\sin z_0}{\cos \varphi} = \frac{\cos z_0 \cos A_0}{\sin \varphi}$$

From these we deduce

$$\cos \delta \sin t_0 \cos t = \sin z_0 \cos z - \cos z_0 \sin z \cos A_0 \cos A$$
$$\cos \delta \cos t_0 \sin t = \cos z_0 \sin z \sin A_0 \sin A$$

the difference of which gives

$$\begin{aligned}\cos \delta \sin (t - t_0) &= - \sin z_0 \cos z + \cos z_0 \sin z \cos (A_0 - A)\\ &= \sin (z - z_0) - 2 \cos z_0 \sin z \sin^2 \tfrac{1}{2}(A_0 - A)\end{aligned}$$

where, if we neglect the last term and denote $t - t_0$ by I, and $z - z_0$ by i, we have the formula for the transit instrument To obtain an expression for this last term, we take the relations

$$\sin z \cos A = \cos \varphi \sin \delta - \sin \varphi \cos \delta \cos t$$
$$\sin z \sin A = \cos \delta \sin t$$

and combine them with

$$\cos A_0 = \sin \delta \sin t_0$$

$$\sin A_0 = \frac{\cos \delta}{\cos \varphi} = \frac{\sin \delta \cos t_0}{\sin \varphi}$$

whence

$$\begin{aligned}\sin z \sin (A_0 - A) &= \sin \delta \cos \delta - \sin \delta \cos \delta \cos (t - t_0)\\ &= \sin 2\delta \sin^2 \tfrac{1}{2} (t - t_0)\end{aligned}$$

Thus $\sin (A_0 - A)$ is very nearly proportional to the square of $\sin \frac{1}{2} (t - t_0)$, and is, consequently, so small that we may put $\sin \frac{1}{2} (A_0 - A) = \frac{1}{2} \sin (A_0 - A)$ in the last term of the above formula We may also in so small a term put z_0 for z Making these substitutions, and writing I and i for $t - t_0$ and $z - z_0$, we find

$$\sin i = \sin I \cos \delta + \tfrac{1}{2} \cot z_0 \sin^2 2\delta \sin^4 \tfrac{1}{2} I \tag{43}$$

Since not only $\sin \frac{1}{2} I$ is a small quantity, but also $\sin 2\delta$, it is evident that the last term will be inappreciable in all practical cases Thus, for the pole star, $\delta = 88° 30'$ and $I = 30^m = 7° 30'$, this term is only $0'' 0052 \cot z_0$.

For either method of observation, therefore, we can regard the formula $\sin \iota = \sin I \cos \delta$ as entirely rigorous.

But in either method we must correct the computed interval ι for refraction This computed interval is the difference of the true zenith distances at the two instants of transit, and the micrometer interval M represents the difference of the apparent zenith distances at these instants, hence, if r and r_0 are the refractions for the zenith distances z and z_0, we shall have

$$R = \frac{\iota - (r - r_0)}{M} = \frac{z - z_0 - (r - r_0)}{M}$$

If we put

$\Delta r =$ the difference of refraction for 1′ of zenith distance,

we shall have

$$r - r_0 = (z - z_0) \Delta r$$

or, very nearly,

$$r - r_0 = MR \Delta r$$

and, consequently,

$$R = \frac{\iota}{M} - R \Delta r \qquad (44)$$

The value of Δr may be taken from the refraction table for the zenith distance at the elongation, which will be found by the formula

$$\cos z_0 = \frac{\sin \varphi}{\sin \delta}$$

An example of this method will be given in the chapter on the Zenith Telescope.

46 Fourth Method —The angular distance of two threads in the focus of a telescope may be directly measured with a theodolite We have seen (Art. 4) that the rays which diverge from the focus and fall upon the object glass emerge from this glass in parallel lines If then these emerging rays be received by the lens of another telescope, they will be converged by the latter lens to its principal focus, where they will form an image of the point from which they diverged Hence, if two telescopes are placed with their optical axes in the same straight line and with their objectives turned towards each other, we may in either telescope see the images of threads at the principal focus of the other If our second telescope is connected with a

vertical or horizontal circle, as in the theodolite, the circle may be used to measure the angular distance of the threads in the first

First—If the micrometer threads are horizontal, that is, perpendicular to the vertical plane (as in the meridian circle when the micrometer is arranged to measure differences of zenith distance or of declination), the telescopes may have any inclination to the horizon, and the angular distance of two threads will be directly measured by moving the theodolite telescope in the vertical plane and bringing its cross-thread successively into coincidence with the images of the two micrometer threads Denoting the difference of readings of the vertical circle in the two positions by A, and the number of revolutions of the micrometer screw between the threads by M, we have $\tan R = \frac{2 \tan \frac{1}{2} A}{M}$, or, very nearly, $R = \frac{A}{M}$

Secondly—If the micrometer threads are parallel to a vertical plane (as in the meridian circle when the micrometer is arranged to measure differences of right ascension), the theodolite is placed as before, and the angular distance of the threads is measured with the horizontal circle But, in this case, if the telescopes are inclined to the horizon by the angle γ (which is obtained from the vertical circle of the theodolite), the angular distance A, read on the horizontal circle, will exceed that of the threads in the ratio 1 $\cos\gamma$ (see the theory of the altitude and azimuth instrument) so that we shall then have $R = \frac{A \cos\gamma}{M}$

This ingenious method was suggested by GAUSS *

47 FIFTH METHOD—When the telescope is connected with a graduated vertical circle and its micrometer is arranged to measure differences of zenith distance, the value of the screw may be found by means of this vertical circle as follows Let the telescope be directed towards the nadir and looking into a basin of mercury immediately under it The rays which diverge from a thread in the focus of a telescope emerge from the objective in parallel lines, they are therefore reflected by the mercury in

* In 1823, *Astron Nach*, Vol II p 371 RITTENHOUSE had previously (in 1785) pointed out the practicability of observing the threads of one telescope through another directed towards the objective of the first, in the *Transactions of the American Philosophical Society*, Vol II p 181

parallel lines, so that they must be converged by the objective again to the focus, where they form an image of the thread. It is evident that the distance of the reflected images of two micrometer threads will be the same as that of the threads themselves Let then EO, Fig 14, be a vertical line drawn through the centre O of the objective, and suppose the fixed and movable threads n and m to be at the same angular distance from EO, on opposite sides of it, or $EOn = EOm$ Then the rays from n, after passing through the objective, form a system of rays parallel to nO, and, after reflection from the mercury (the surface of which is perpendicular to EO), form a system of rays parallel to Om, and therefore the reflected image of n is seen at m For the same reason, the reflected image of m is seen at n Now let the telescope be revolved through an angle equal to EOn, so as to make the line nO a vertical line, then the image of n will be found in the vertical line, and will, consequently, be seen in coincidence with n itself. And if the telescope is revolved in the opposite direction through an angle equal to EOm, the image of m will be brought into coincidence with itself Hence the whole angular motion (A) of the telescope, as measured by the vertical circle, between the two positions in which n and m are seen in coincidence with their own reflected images, respectively, is the required angular distance of the threads, and, the number of revolutions of the micrometer screw between them being M, we have, as in other cases, $R = \frac{A}{M}$

Fig 14

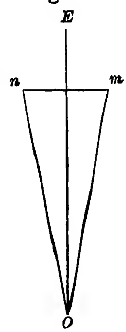

We may, however, dispense with the use of the fixed thread in this process Let the movable thread be placed in any part of the field, bring it into coincidence with its reflected image by revolving the telescope, and read the circle Then place it in any other part of the field, bring it into coincidence with its reflected image, and read the circle The thread having been moved through M revolutions, and the difference of the circle readings being A, we find R as before

In order that the reflected images of the threads may be visible, it is found necessary to throw light *down* the tube, that is, *from* the ocular For this purpose, one of the eye pieces (called a *collimating* or *nadir eye piece*) is furnished with a reflector, placed at an angle of 45° with the optical axis, which receives

light from a lamp held on one side and reflects it down the tube This reflector is sometimes placed within the eye piece, between the two lenses, the light is then received through an aperture in the side of the eye tube, and the reflector, if made of metal, is perforated in the centre in order that the field may be visible. A better plan is to place a small piece of very thin mica outside the eye piece, between the outer lens and the eye, and at an angle of 45° with the axis. The mica, being transparent, does not interfere with the view of the field, and is at the same time a very perfect reflector. This plan has the advantage that the mica reflector may be temporarily applied to any of the eye pieces in actual use

A mercury reflector used, as in this case, to give reflected images of the threads, we shall hereafter designate as a *mercury collimator* *

48 *Effect of temperature upon the value of a revolution of the micrometer screw*—Changes of temperature affect the angular value of a revolution of the screw in two ways *first*, by changing the absolute length of the screw itself, *secondly*, by changing the figure of the objective, and thereby also the focal length Perhaps we should add, also, the almost evanescent change in the focal length resulting from a change in the refractive power of the glass The whole effect, however, is very small, and may be assumed to be proportional to the change of temperature so that, if R_0 is the value of a revolution of the screw for an assumed temperature τ_0, R the value for any given temperature τ, we have

$$R_0 = R + R(\tau - \tau_0)x = R[1 + (\tau - \tau_0)x] \tag{45}$$

in which x is to be determined so as to satisfy the observed values of R at different temperatures as nearly as possible, which is done by the method of least squares

Example.—Suppose the following values of R have been observed

$R =$	26″.557,	26″ 532,	26″ 529,	26″ 500,	26″ 498,
for $\tau =$	10°	30°	40°	62°	75° (Fahr)

* The use of the mercury collimator in connection with the nadir eye piece was introduced by Bohnenberger in 1825 v *Astron Nach*, Vol IV p 327

and it is proposed to determine R_0 for $\tau_0 = 50°$ We shall have the equations

$$\begin{aligned}
R_0 &= 26''\,557\,(1 - 40x)\\
R_0 &= 26\ \ 532\,(1 - 20x)\\
R_0 &= 26\ \ 529\,(1 - 10x)\\
R_0 &= 26\ \ 500\,(1 + 12x)\\
R_0 &= 26\ \ 498\,(1 + 25x)
\end{aligned}$$

Let us assume $R_0 = 26\ 5 + y$, these equations become

$$\begin{aligned}
1062x + y - 0''\,057 &= 0\\
531x + y - 0\ \ 032 &= 0\\
265x + y - 0\ \ 029 &= 0\\
-\ 318x + y + 0\ \ 000 &= 0\\
-\ 662x + y + 0\ \ 002 &= 0
\end{aligned}$$

Hence, by the usual process in the method of least squares, we find the normal equations

$$\begin{aligned}
2019398x + 878y - 86''\,535 &= 0\\
878x + \ \ 5y - \ \ 0\ \ 116 &= 0
\end{aligned}$$

whence

$$x = +\,0\ 0000355 \qquad\qquad y = +\,0''\,017$$

and, consequently, $R_0 = 26''\,517$, and

$$R = \frac{26''\,517}{1 + 0\ 0000355\,(\tau - 50°)}$$

As the coefficient of $\tau - 50°$ is so small, we may take

$$\begin{aligned}
R &= 26''\,517\,[1 - 0\ 0000355\,(\tau - 50°)]\\
&= 26''\,517 + 0''\,000941\,(50° - \tau)
\end{aligned}$$

This gives for the values of R at the observed temperatures,

$R =$	$26''\,555$,	$26''\,536$,	$26''\,526$,	$26''\,504$,	$26''\,493$
for $\tau =$	$10°$	$30°$	$40°$	$62°$	$75°$

which agree with the observed values within the probable errors of such determinations

49 *The position filar micrometer* —When a filar micrometer is attached to an equatorially mounted telescope, there is usually combined with it a small graduated circle, the plane of which is parallel to that of the micrometer threads, by means of which

the angle which these threads, or the transverse threads, make with a declination circle may be ascertained The micrometer then serves to measure not only the distance between two stars, but also their *angle of position*, that is, the angle which the arc joining the two stars makes with a declination circle

The index error of the circle, or its reading for the position angle zero, is best obtained with the telescope in the meridian Let the micrometer be revolved until the movable thread is perpendicular to the meridian, which will be the case when a star of small declination remains upon the thread throughout its passage across the field The transverse thread will then represent the meridian, and in all other positions of the telescope, if the equatorial adjustment is good, will represent a declination circle * If the reading of the position circle is then P_0, and the micrometer is afterwards revolved so that its transverse thread passes through two stars in the field, and the reading becomes P, the apparent position angle of the stars is

$$p = P - P_0 \tag{46}$$

All position angles should be read from 0 to 360° in the same direction I shall always suppose them to be reckoned from the north through the east

50 I shall briefly notice some other micrometers hereafter (Chapter X) What has been given in relation to the filar micrometer was necessary in this place on account of the connection of this instrument with nearly every form of telescope

THE LEVEL.

51 The spirit level may here be classed among the instruments for measuring small angles, inasmuch as its use in astronomy is not so much to make a given line absolutely level as to measure the small inclination of the line to the horizon. It consists of a glass tube, ground on the interior to a curve of large radius, and nearly filled with alcohol or sulphuric ether (Water would freeze and burst the tube) The bubble of air occupying the space left by the fluid will always stand at the

* See, however, Chapter X in case the adjustment of the equatorial telescope is not quite exact

highest point of the curve of the tube, and therefore any change of the relative elevation of the two ends of the tube must be followed by a corresponding change in the position of the bubble This position of the bubble, therefore, which is read off by means of a scale, or by graduations marked on the tube itself, serves to measure all changes of inclination within the extreme ranges of the arc of the curve employed The larger the radius of the curve, the more sensitive will the level be There is, however, obviously a practical limit to the radius, which is determined by the kind of instrument to which the level is to be applied and the degree of accuracy aimed at

In order to apply the level to the horizontal axis of an instrument, it is either mounted upon two legs, the distance apart of which is nearly equal to the length of the axis, and these legs terminate in Vs, so that the level bears only at two points of the cylindrical pivots of the axis, in which case it is called a *striding* level or it hangs from the axis by arms, which are recurved and terminate in inverted Vs, and it is then called a *hanging* level

Plate II, Fig 4, represents a common form of the striding level, and Fig 5 is an end view of the legs The tube *ef* is in this level covered by a larger glass tube *abcd*, to protect the fluid from sudden changes of temperature These are secured to a bar *AB*, usually a hollow brass cylinder, which is connected with the legs by screws *s* and *t*, which serve to adjust the relation of the level tube to the line of bearing of the Vs of the feet, as will be explained hereafter

52 In order to investigate the method of using the level, let us first suppose EW, Fig 15, to be a truly horizontal line on which the level AB rests. Let O be the zero of the graduations, e and w the ends of the bubble Let the length of the bubble be $2l$ If the legs AE and BW were perfectly equal, and O were in the middle of AB, the readings of w and e from O would be exactly the same, and each equal to l But, if BW is the longer leg, the bubble will stand nearer to B by a number x of divisions, and if at the same time the zero O stands nearer to A than to B,

Fig 15

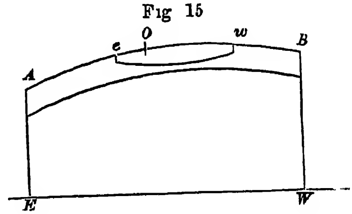

at a distance of y divisions from the middle, then the readings will be

$$\begin{array}{ll} \text{at } w, & l + x + y, \\ \text{at } e, & l - x - y \end{array}$$

If now W is raised so that EW becomes inclined to the horizon by the angle b, the bubble will stand nearer to the end B by a number z of divisions, so that the whole readings at w and e will be

$$\left.\begin{array}{l} w = l + x + y + z \\ e = l - x - y - z \end{array}\right\} \qquad (47)$$

To eliminate the errors x and y, let the level now be reversed, so that the end A stands over W and B over E The errors x and y will both change sign, but, the line EW being inclined as before, the readings of the ends of the bubble towards W and E, respectively, will be

$$\left.\begin{array}{l} w' = l - x - y + z \\ e' = l + x + y - z \end{array}\right\} \qquad (48)$$

From the equations (47) and (48) we deduce

$$\left.\begin{array}{l} \frac{1}{2}(w - e) = x + y + z \\ \frac{1}{2}(w' - e') = -(x + y) + z \end{array}\right\} \qquad (49)$$

whence

$$z = \tfrac{1}{2}\left[\tfrac{1}{2}(w - e) + \tfrac{1}{2}(w' - e')\right]$$

or

$$z = \frac{(w + w') - (e + e')}{4} \qquad (50)$$

whence the practical rule · *Place the level on the line whose inclination is to be measured, and read the divisions at the ends of the bubble ; reverse the level, and read again Add together the two readings lying towards one end of the line, and also the two readings lying towards the other end of the line One-fourth the difference of these sums is the measure of the inclination The line is elevated at that end which gives the greatest sum of readings.*

This gives the inclination expressed in divisions of the level, the value of the angle b corresponding to z divisions is known when the angular value d of a division is known, so that

$$b = dz \qquad (51)$$

53. The errors x and y are inseparable, we can only find their sum, which is

$$x + y = \frac{(w - e) - (w' - e')}{4} \tag{52}$$

If the errors of the level could be regarded as constant, the value of $x + y$ thus found would enable us to dispense with the reversal of the level, since either of the equations (49) would then determine z, but such constancy is never to be assumed

54 For greater accuracy, the level may be read a number of times in each position, taking care to lift it up after each reading, so that each observation may be independent of the others. The sums of all the readings at each end of the bubble are to be formed, and the difference of these sums divided by the whole number of readings. The number of readings in the two positions must be equal

EXAMPLE 1

A level on the axis of a transit instrument was read as follows

	W	E	$w - e$
1st Position	29 1	31 2	$-$ 2 1
2d "	35 4	24 9	$+$ 10 5
	64 5	56.1	4) $-$ 12 6
	56 1		$x + y = -$ 3 15 = error of the level
	4) 8 4		
	$z =$ 2 1		

The value of a division was $d = 1'' 25$; and hence

$$b = dz = 2'' 63$$

which is the elevation of the west end of the axis

EXAMPLE 2

The following readings were obtained with the same instrument:

	W	E
1st Position	29 0	31 3
2d "	35 4	24 9
2d "	35 6	24 6
1st "	29 2	31 0
	129 2	111 8
	111 8	
	8) 17 4	
	$z =$ 2 18	$b = 2'' 72$

By taking the first and last observations in the same position of the level, as in this example, any small change in the level itself, occuring during the observations, is eliminated.

55. The zero of the level is, however, not always placed near the middle of the tube; it may be at one end and the divisions numbered consecutively through the whole length of the tube. In this case, we have only to find the reading corresponding to the middle of the bubble in each position of the level: the half difference of these readings will evidently be the required inclination. It will be necessary, in the record of the observation, to note the position of the ends of the level, or to indicate in some manner the direction in which the divisions increase, which is usually effected most readily by a conventional use of the algebraic sign, as in the following:

Example

A level which is graduated from the end A towards the end B reads as follows when placed on the axis of a transit instrument:

	W	E	Reading of middle of bubble	or thus
A east	$+64.0$	$+13.5$	$+38.75$	$+77.5$
B "	-10.1	-60.7	-35.40	-70.8
			$2)\ +3.35$	$4)\ +6.7$
			$z = +1.675$	$z = +1.675$

Since in the case of a transit instrument we wish to find the *elevation* of the *west* end (a negative elevation being interpreted as a depression), we here mark the level readings with the positive sign when they increase towards the west, and with the negative sign when they increase towards the east. The value of z will then be obtained, with its proper sign, by simply taking the mean of all the readings, as in the last column above.

56. In the above examples, the diameters of the two pivots of the axis on which the level rests are assumed to be the same. When this is not the case, a correction becomes necessary, which will be considered in its place under "Transit Instrument," Chapter V.

57 *To find the value of a division of the level* —This is most readily done by means of a simple instrument called a *level-trier* A horizontal bar is supported by two feet at one end and by a single foot-screw at the other The level is placed on the bar, and the number of turns of the foot-screw necessary to carry the bubble over any given number of divisions is observed. The angular value of a turn of the foot-screw is known from the distance of its threads and the length of the bar. The head of the screw is graduated so that a fraction of a turn may be noted

We can also determine the value of a division by attaching the level tube to a vertical circle and noting the number of seconds on the circle corresponding to a motion (of the circle and level together) which carries the bubble over a given number of divisions Thus, suppose we read the ends A and B of a level thus attached to a circle, and also read the circle itself, as follows.

A	B	Circle
5 0	40 2	0° 0′ 40″
41 3	3 8	0 1 25 3
36 3	36 4	45 3

$$(\text{mean})\ 36\ 35\, d = 45''\ 3$$
$$d = 1''\ 246$$

When the level is applied to a telescope which is provided with a micrometer, the value of the divisions of the level may be found from those of the micrometer An example of this method will be given in connection with the Zenith Telescope, Chapter VIII.

58. *To find the radius of curvature of a level.*—Let n be the length of a division in linear units, d the value of a division in arc, found as above, then the radius will be

$$r = \frac{n}{d \sin 1''}$$

Suppose that in the level of the preceding article we have $n = 0\ 103$ inch, then we find, for this level, $r = 17051$ inches, or 1421 feet

59 *The value of a division of a level may be affected by changes of temperature.*—This will be discovered by taking observations for determining this value at two temperatures as different as pos-

sible The proper value to be used for any intermediate temperature will then be found by interpolation

60 *It is also possible that the radius of curvature of different portions of the tube may be different*—This, of course, is a radical defect in the construction of the instrument its effect is to give different angular values to divisions of equal absolute length in different portions of the tube The existence of such a defect will be discovered by determining the value of a division independently at various points, and it is proper to examine all our levels in this manner A level thus defective should be rejected as unfit for any refined observation, but, if no other can be had, a careful investigation might determine a system of corrections to be applied to the different readings

61 It remains to be shown how to effect the mechanical adjustment of the level 1st The bubble should stand *nearly* in the middle of the tube when the level stands upon any horizontal line This is quickly brought about by finding the error of the level $= x + y$, (as in Example 1, Art 54) and then turning the screws t, t', Plate II Fig. 5, until the bubble has moved through this quantity in the proper direction 2d The axis of the tube should be parallel to the line joining the angle of the Vs of the feet, and, consequently, parallel to the axis of an instrument on which it rests This is tested by slightly revolving or rocking the level on the axis of the instrument, so that the legs are thrown out of a perpendicular on either side If the axis of the level tube is not parallel to the line joining the feet, but lies *cross-wise* with respect to that line, this revolution will cause the bubble to change its position, and it will be easy to see in what direction the correction must be made. The adjustment is made by the screws s, s'.

CHAPTER III

INSTRUMENTS FOR MEASURING TIME

62 *Chronometers*.—The chronometer is merely a very perfect watch, in which the balance wheel is so constructed that changes of temperature have the least possible effect upon the time of its oscillation Such a balance is called a *compensation* balance A chronometer may be well compensated for temperature and yet its *rate* may be gaining or losing on the time it is intended to keep the compensation is good when changes of temperature do not affect the rate It is not necessary that a chronometer's rate should be zero (or even very small, except that a small rate is practically *convenient*), it is sufficient if the rate, whatever it is, remains constant The indications of a chronometer at any instant require a correction for the whole accumulated error up to that instant If the correction is known for any given time, together with the rate, the correction for any subsequent time is known The methods of finding these quantities are given in Vol I, Chapter V

63 *Winding*.—Most chronometers are now made to run either eight days or two days The former are wound every seventh day, the latter daily, so that in case the winding should be forgotten for twenty-four hours the chronometers will still be found running But it is of importance that they should be wound regularly at stated intervals, otherwise an unused part of the spring comes into action, and an irregularity in the rate may result

Chronometers are wound with a given number of half turns of the key It is well to know this number, and to count in winding, in order to avoid a sudden jerk at the last turn still the chronometer should always be wound *as far as it will go*, that is, until it resists further winding This resistance is produced not by the end of the chain, but by a catch provided to act at the proper time and thus protect the chain

When a chronometer has stopped, it does not again start immediately after being wound up It is necessary to give the whole instrument a quick rotatory movement, by which the balance wheel is set in motion This must be done with care, however, and with little more force than is necessary to produce the result, afterwards the chronometer must be guarded from all sudden motions

The hands of a chronometer can be moved without injury to the instrument, so that it may be set proximately to the true time It is, however, not advisable to do this often

64 *Transporting*—Chronometers transported on board ship should be placed as near the centre of motion as possible, and allowed to swing freely in their gimbals, so that they may preserve a horizontal position They should also be kept as nearly as possible in a uniform temperature

When transported by land, the chronometer should no longer be allowed to swing in its gimbals, but is to be fastened by a clamp provided for the purpose, for the sudden motions which it is then liable to receive would set it in violent oscillation in the gimbals, and produce more effect than if allowed to act directly

Pocket chronometers should be kept at all times in the same position. consequently, if actually carried in the pocket during the day, they should be suspended vertically at night

It has been found that the rates of chronometers have been affected by masses of iron in their vicinity, indicating a magnetic polarity of their balances Such polarity may exist in the balance when it first comes from the hands of the maker, or it may be acquired by the chronometer standing a long time in the same position with respect to the magnetic meridian In order to avoid any error that might result from this polarity (whether known or unknown), it will be well to keep the chronometers always in the same position. Hence, they should not be removed from the ship to be *rated;* but their rates should be found after they are placed in the position they are to occupy

The rate of a chronometer when transported is seldom the same as when at rest. The travelling rate is found by comparing the observations taken at the same place before and after the journey, or from observations at two places whose difference of longitude is perfectly well known A list of well determined

"differences of longitude" is given in RAPER's *Practice of Navigation*, for the use of navigators in finding the sea rates of their chronometers (See Vol I Art 258)

65 *Correction for temperature* —An absolutely perfect compensation for temperature in chronometers is hardly to be expected It has been found* that the average temperature compensation of chronometers is of such a nature as to cause the instrument to lose on its daily rate when exposed to a temperature either above or below a certain point for which the compensation is most perfect Professor BOND found for a large number of chronometers that if ϑ_0 be the temperature of best compensation, ϑ that of actual exposure, the rate may be expressed for a range of 20° above and below ϑ_0 by the formula

$$m = m_0 + k\,(\vartheta - \vartheta_0)^2 \tag{53}$$

in which k is a constant, and has, with rare exceptions, a positive sign, and m_0 and m are the *rates* at the temperatures ϑ_0 and ϑ, respectively, losing rates being positive

M LIEUSSON, from a very extended examination of the performance of chronometers on trial at the Observatories of Greenwich and Paris, finds that the rate varies both with the temperature and with the age of the oil with which the pivots are lubricated The thickening of the oil tends to diminish the amplitude of the vibration of the balance, and thus produces an acceleration of the chronometer This acceleration is almost exactly proportional to the time, so that for any time t the rate may be found by the complete formula

$$m = m_0 + k\,(\vartheta - \vartheta_0)^2 - k't \tag{54}$$

in which k' is the daily change of rate resulting from the gradual thickening of the oil. The constants k and k' will be different for every chronometer, and are determined by experiment for each instrument

66 *Comparison of Chronometers.*—When one or more chronometers are to be regulated by means of astronomical observa-

---

* LIEUSSON, Récherches sur les variations de la marche des pendules et des chronomètres, Paris, 1854 G P BOND, in his report on the longitude in the Report of the Superintendent U S Coast Survey for 1854, App p 141

tions, these observations are made with but one of them, and the corrections of all the others are found by comparing them with this On board ship the chronometers are never brought on deck, but the observations are made with a watch (often called a "hack-watch"), which is compared with the chronometer either before or after, or both before and after, the observations The double comparison is necessary where extreme precision is required, in order to eliminate any difference of the rates of the watch and chronometer

Example

An observation is recorded by a hack-watch at the time $10^h\ 12^m\ 13^s\ 3$, and the following comparisons are made with the chronometer Required the time of the observation by the chronometer

Chron	$8^h\ 17^m\ 0^s$	$8^h\ 27^m\ 0^s$
Watch	10 8 9 5	10 18 8 0
Reduction	—1 51 9 5	— 1 51 8 0

Here the watch loses $1^s\ 5$ in 10^m hence, in 4^m, the time from the first comparison to the observation, it loses $1^s\ 5 \times \frac{4}{10}$ or $0^s\ 6$, so that the difference at the time of the observation is $1^h\ 51^m\ 8^s\ 9$; therefore we have

Watch time of obs	=	$10^h\ 12^m\ 13^s\ 3$
Reduction to chron	=	— 1 51 8 9
Chron time of obs	=	8 21 4 4

Comparison by coincident beats —When two chronometers are compared which keep the same kind of time, and both of which beat half seconds, it will mostly happen that the beats of the two instruments are not synchronous, but one will fall after the other by a certain fraction of a beat, which will be pretty nearly constant, and must be estimated by the ear This estimate may be made within half a beat, or a quarter of a second, without difficulty, but it requires much practice to estimate the fraction within $0^s\ 1$ with certainty But if a mean time or *solar* chronometer is compared with a *sidereal* chronometer, their difference may be obtained with ease within *one-twentieth* of a second. Since 1^s sidereal time is less than 1^s mean time, the beats of the sidereal chronometer will not remain at a constant fraction behind those of the solar chronometer, but will gradually gain

on them, so that at certain times they will be coincident. Now, if the comparison is made at the time this coincidence occurs, there will be no fraction for the ear to estimate, and the difference of the two instruments *at this time* will be obtained exactly The only error will be that which arises from judging the beats to be in coincidence when they are really separated by a small fraction, and it is found that the ear will easily distinguish the beats as not synchronous so long as they differ by as much as 0^s 05, consequently the comparison is accurately obtained within that quantity Indeed, with practice it is obtained within 0^s 03, or even 0^s 02 Now, since 1^s sidereal time $= 0^s$ 99727 mean time, the sidereal chronometer gains 0^s 00273 on the solar chronometer in 1^s, and therefore it gains 0^s 5 in 183^s, or very nearly in 3^m Hence, once every three minutes the two chronometers will beat together * When this is about to occur, the observer begins to count the seconds of one chronometer, while he directs his eye to the other, when he no longer perceives any difference in the beats, he notes the corresponding half seconds of the two instruments.

Example

A solar and a sidereal chronometer were compared by coincident beats, as follows:

Solar chron	$4^h\ 16^m\ 0^s$	$4^h\ 19^m\ 10^s$.
Sidereal "	1 3 11 5	1 6 22
Difference	3 12 48 5	3 12 48

Here the interval between the two comparisons being about 3^m, the sidereal chronometer has gained a beat In order to judge of the accuracy of the comparisons, let us reduce the second to the time of the first. The solar interval is, by the solar chronometer, $3^m\ 10^s$, the corresponding sidereal interval is, by the tables, $3^m\ 10^s$ 52, the second comparison reduced to the time of the first stands as follows

Solar chron	$4^h\ 16^m\ 0^s$
Sid "	1 3 11 48
Difference	3 12 48 52

* They will either beat together, or at least their beats will both fall within a space of time equal to one-half of 0^s 00273

that is, it agrees with the first comparison within $0^s.02$ Suppose that at the second comparison the time when the beats were coincident was mistaken, and the observer made his comparison 10^s later, he would have had 10^s more on each chronometer, and consequently would have put down the comparison thus

Solar chron	$4^h\ 19^m\ 20^s$
Sid "	1 6 32

The mean interval between the comparisons would have been $3^m\ 20^s$, and the equivalent sidereal interval is $3^m\ 20^s\ 55$, so that this second comparison reduced to the time of the first would have stood thus

Solar chron	$4^h\ 16^m\ 0^s$
Sid "	1 3 11 45
Difference	1 12 48 55

that is, the two comparisons would still have agreed within $0^s\ 05$ The observer can in this way satisfy himself by a few trials that the two chronometers can really be compared within $0^s\ 05$ with certainty

When two solar chronometers are to be compared together, it will be most accurately done by comparing each with a sidereal chronometer by coincident beats, and reducing the comparisons as follows

Example

Two solar chronometers A and B are compared with a sidereal chronometer C, as below

	C $6^h\ 13^m\ 20^s$		A $4^h\ 40^m\ 10^s\ 5$
	C 6 15 15		B 5 21 13
Sid interval	1 55	=	1 54 69 solar
	B reduced to time of A	=	5 19 18 31
	Difference of A and B	=	0 39 7 81

The intermediate chronometer used for comparison is not necessarily a sidereal one It may be a mean time chronometer which does not beat half seconds, for example, a pocket chronometer which beats 13 times in 6 seconds In this case each beat of the pocket chronometer is worth $\frac{6}{13}$, and therefore differs from that of a chronometer beating half seconds by $\frac{1}{26}$ of a second.

The inaccuracy of a coincidence cannot exceed this quantity, and the comparison may, therefore, also be made within $\frac{1}{26}$ of a second

67 *Probable error of an interpolated value of a chronometer correction* —When the corrections ΔT and $\Delta T'$ for the times T and T' are given, the correction for any other time $T + t = T' - t'$ is found by interpolation Denoting the rate by δT, and the required correction by x, we have

$$\text{either } x = \Delta T + t \ \delta T \qquad \text{or} \qquad x = \Delta T' - t' \ \delta T$$

Now, granting that the given quantities ΔT and $\Delta T'$ are perfectly correct, the interpolated values of x will also be correct if there are no *accidental* irregularities in the going of the chronometer. But such accidental irregularities certainly exist, and tend to diminish the *weight* to be assigned to any interpolated value of the correction If the mean (accidental) error in a unit of time is ε, the mean error in the interval t is, by the theory of least squares, $\varepsilon\sqrt{t}$, and the weight is inversely proportional to the square of this error, that is, inversely proportional to t. We shall have then

$$x = \Delta T + t \ \delta T \text{ with the weight } \frac{k}{t}$$

$$x = \Delta T' - t' \ \delta T \quad \text{“} \quad \text{“} \quad \text{“} \quad \frac{k}{t'}$$

in which k is an undetermined constant

Multiplying each value by its weight, and dividing the sum by the sum of the weights (according to the usual process in the method of least squares), we have

$$x = \frac{t' \ \Delta T + t \ \Delta T'}{t + t'}, \text{ with the weight} = k\left(\frac{t + t'}{tt'}\right) \tag{55}$$

$$\text{or with the mean error} = \varepsilon\sqrt{\frac{tt'}{t + t'}}$$

This error is zero either for $t = 0$ or $t' = 0$, and is a maximum for $t = t'$, that is, when the correction is found for the middle time between the two given times T and T'

68 If, however, the chronometer has accelerated or retarded uniformly, the error will obtain a different expression Let the

rate at the time T be δT and at the time T' be $\delta' T$ The acceleration in a unit of time is

$$\delta'' T = \frac{\delta' T - \delta T}{t + t'} \tag{56}$$

The rate at the middle instant between T and $T + t$ is $\delta T + \frac{1}{2} t \ \delta'' T$, and at the middle instant between T' and $T' - t'$ it is $\delta' T - \frac{1}{2} t' \ \delta'' T$, hence we have

$$x = \Delta T + t\,(\delta T + \tfrac{1}{2} t \ \delta'' T) = \Delta T + t \ \delta T + \tfrac{1}{2} t^2 \ \delta'' T$$
$$x = \Delta T' - t'\,(\delta' T - \tfrac{1}{2} t' \ \delta'' T) = \Delta T' - t' \ \delta' T + \tfrac{1}{2} t'^2 \ \delta'' T$$

Multiplying the first by t', the second by t, and dividing the sum of the products by $t + t'$, we have

$$x = \frac{t' \ \Delta T + t \ \Delta T'}{t + t'} - tt' \ \frac{\delta' T - \delta T}{t + t'} + \tfrac{1}{2} tt' \ \delta'' T$$

or

$$x = \frac{t' \ \Delta T + t \ \Delta T'}{t + t'} - \tfrac{1}{2} tt' \ \delta'' T \tag{57}$$

whence it appears that the error of the value obtained by simple interpolation, or upon the supposition of a uniform rate, is $\frac{1}{2} tt' \ \delta'' T$, and this error is also a maximum for the middle instant between T and T', when $t = t'$, and vanishes for $t = 0$ or $t' = 0$

69. Every chronometer has, moreover, its own peculiarities which render the application of any formula for weight more or less uncertain STRUVE found that, for the greater number of the chronometers which he tried, the mean error of an interpolated value of their corrections could be expressed by the empirical formula $\varepsilon \ \frac{tt'}{t + t'}$, differing from the above theoretical formula by the omission of the radical sign (*Expédition Chronométrique*, p 101)

70 *Clocks.*—The astronomical clock is provided with a compensation pendulum, by which the effect of temperature is even more completely eliminated than in chronometers. The only forms in use are the *Harrison* (the *gridiron*) and the *mercurial* pendulum

In the gridiron pendulum the rod is composed (in part) of a number of parallel bars of steel and brass, so connected together

that the expansion of the steel bars produced by an increase of temperature tends to depress the "bob" of the pendulum, the greater expansion of the brass bars tends to raise it, so that when the total lengths of the steel and brass bars have been properly adjusted a perfect compensation occurs, and the centre of oscillation remains at a constant distance from the point of suspension. The rate of the clock, so far as it depends upon the length of the pendulum, will therefore be constant

In the mercurial pendulum, the weight which forms the bob in other cases is replaced by a cylindrical glass vessel nearly filled with mercury With an increase of temperature the rod lengthens, but the mercury expanding must rise in the cylinder, so that when the quantity of mercury is properly proportioned to the length of the rod the centre of oscillation remains at the same distance from the point of suspension If a clock is to be exposed to sudden changes of temperature, the gridiron pendulum will be preferable to the mercurial, as the large body of mercury will obtain the temperature of the air more slowly than the thin metal rods

In setting up the clock the chief point to be observed is that its alternate beats are exactly equal The pendulum usually carries a pointer at its lower extremity which indicates upon an arc below the pendulum the extent of a vibration. Let the pendulum be drawn towards one side gently, until a tooth of the escapement wheel is just freed, and mark the point of the arc at which this occurs, then let the pendulum be drawn towards the other side, and mark the point of the arc at which a tooth escapes Find the middle point *A* of the included arc Then let the pendulum come to rest in a vertical position: if the pointer is on *A* the adjustment is correct, and the vibrations on each side will be isochronous, if not, the clock case must be moved until the vertical pendulum is directed exactly towards *A* The equality of the vibrations may also be tested by the electro-chronograph, hereafter described

What has been said above respecting the comparison of chronometers will apply, with scarcely any modification, to that of clocks, or of a clock with a chronometer

In the observatory, a clock regulated to *sidereal* time is the indispensable companion of the transit instrument The standard or *normal* clock of an observatory is carefully mounted upon a stone pier which is disconnected from the walls or floors of the

building, and also protected as much as possible from changes of temperature For the latter purpose it is sometimes imbedded in a stone pier, in an air-tight compartment below the surface of the ground STRUVE found that the changes of barometric pressure, by varying the resistance which the air opposes to the motions of the pendulum, caused a variation in the rate of the normal clock of the Pulkowa Observatory of 0ˢ 32 for a variation of one English inch of the barometer *

71. *The electro-chronograph* —This contrivance may be regarded as an appendage of the astronomical clock, and bearing the same relation to it that the reading microscope bears to a divided circle; for its chief use is to subdivide the seconds of the clock, and thus to measure micrometrically the smallest fractions of time In order to effect this micrometric subdivision, the clock beats are converted from audible into visible signals, which are recorded on paper by means of an electro-magnet The instant of the occurrence of any phenomenon is also registered by a visible signal on the same paper, and thus referred to the preceding clock beat with great precision This general statement covers a great variety of special contrivances leading to the same end We shall here treat only of those which, thus far, have been most used.

72 The simplest form of register is that known on our telegraphic lines as MORSE's, in which a fillet of paper is reeled off at a uniform velocity by means of a train of wheels moved by a weight. The fillet passes over a small cylinder and just under a hard steel point, or pen (as it is called, for brevity), which is so connected with the armature of an electro-magnet that whenever the electric circuit of the galvanic battery is established, the pen is pressed upon the paper and leaves a visible mark The wire from one pole of the battery which passes around the electro-magnet does not return directly to the other pole, but first passes through the clock, where, by a contrivance presently to be described, the circuit is broken and restored at every second The Morse fillet in running off, therefore, receives an impression every second, and thus becomes graduated into spaces representing seconds. These spaces are greater or less according to the

* *Description de l'observatoire astronomique central de Poulkova*, p 220

velocity with which the paper runs off, an inch per second is even more than sufficient, as it is easy to divide an inch into fifty parts by a scale, even without the aid of a magnifier

It is of importance that the paper should run off with a uniform velocity, at least, no sudden changes of velocity should occur In the Morse register this regularity is maintained by an ordinary fly-wheel In the *spring-governor*, invented by the Messrs BOND, a fly-wheel and pendulum are both used The pendulum secures the condition that the seconds shall be of the same length, while the fly is supposed to maintain a uniform motion during the second In this and in other chronographic instruments there is substituted for the fillet a sheet of paper wrapped about a cylinder which makes one revolution per minute As the cylinder revolves, a fine screw causes it to move also in the direction of its length, so that the pen records in a perpetual spiral, and when the paper is removed from the cylinder the successive minutes are found recorded in successive parallel lines One such sheet will contain the record of upwards of two hours' work This cylindrical register is preferable to the Morse fillet for most chronographic purposes, on account of the convenience with which the sheets may be read off and filed away for subsequent reference

In SAXTON's cylindrical register the movement is regulated by a combination of the crank motion with the vibration of two pendulums

Professor MITCHEL employed a circular disc upon which the successive minutes occupied concentric circles, each of which was graduated into seconds with great precision by connection with the clock

73 The connection of the clock with the register is made in one of two ways, either so as to *break* the circuit every second, or so as to *make* it

The method most used of causing the clock to break the circuit is that suggested by Mr SAXTON, of the Coast Survey *ACB*, Fig 16, is a small and very light "tilt-hammer," usually made of platinum wire, mounted upon a pivot *C*, so that the end *A* shall slightly preponderate and rest upon a platinum plate *E*. The end *B* is bent into an obtuse angle The wire *F* from one pole of the galvanic battery is constantly connected with the tilt-hammer through the metallic support *D* Another wire *G* is

Fig 16

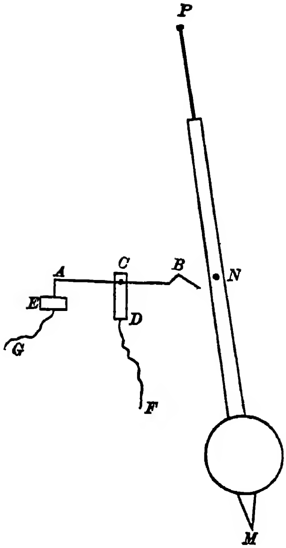

connected with the plate E, and goes first to the electro-magnet of the register and thence to the other pole of the battery This apparatus is placed in the clock case in front of the pendulum PM, with the vertex of the angle B in a vertical line below the point of suspension P A small pin N projecting from the pendulum rod passes over the angle B at each vibration of the pendulum, and, by thus depressing the end B of the tilt-hammer, raises the end A from the plate E and breaks the circuit, which otherwise is complete through the connection of the portion AC of the tilt-hammer with both the wires F and G The interval of time during which the circuit is broken will be longer or shorter according as the pin N strikes the sides of the angle B farther from or nearer to its vertex It may be adjusted so that the break shall last but one-twentieth of a second, or for a shorter time if required

Now, if the pen of the register is kept pressed upon the paper by the attraction of the electro-magnet, it is clear that the breaks produced by the clock will produce corresponding breaks in the continuous line made by the pen, and the paper will be graduated into seconds, thus

But if the pen is pressed upon the paper by a spring acting *against* the attraction of the magnet, then each break produced by the clock will give a corresponding short mark on the paper with an intervening blank, so that the paper will be graduated into seconds, thus:

The first of these methods is commonly preferred

In the cylindrical registers a pen carrying ink is used, and the breaking of the circuit by the clock does not cause the pen to

rise from the paper, but moves it laterally; in this case the paper is graduated into seconds, thus

Dr Locke also employed a tilt-hammer for breaking the circuit, but the hammer was worked by the teeth of a wheel placed on the axis of the escapement wheel of the clock

At the Washington Observatory, the record on the paper of the cylindrical registers has also been made by fine punctures produced by a needle point The needle has a little play which prevents its resisting the motion of the cylinder during the time required for the needle to enter and leave the paper.

74. The most simple method by which the pendulum *makes* the circuit at each beat is also the suggestion of Mr Saxton A small globule of mercury is placed just below the pendulum, as at *A*, Fig 17, upon a metallic support which by the wire *F* is in connection with one pole of the battery Another wire *G* is connected with the metallic support of the pendulum rod at *P*, and is connected with the other pole of the battery through the electro-magnet A fine point *m* upon the extremity of the pendulum passes through the globule at each vibration and establishes the electric circuit, for a small fraction of a second, through the pendulum itself The effect will be to graduate the paper in one of the above mentioned ways according to the arrangement of the register.

Fig 17

75. Having thus obtained a graduated visible time-scale, its application to the exact recording of an astronomical observation is very simple We have only to let one of the wires in connection with the magnet pass, on its way to the battery, *through the hand of the observer*, where the circuit may be broken and restored at pleasure A small piece of apparatus called a *signal-key* is used for this purpose It consists of a piece of wood, five or six inches in length, Fig 18, on which is fastened a metallic spring *AB*, which by a very slight pressure of the finger can be brought into contact with a metallic

plate at *C*. Conceive the wire in its circuit from the magnet to the battery to be severed at the key, let one end *F* be connected with the spring *AB*, the other end *G* with the plate *C*. The continuity of the wire may be regarded as restored whenever the spring is pressed into contact with the plate *C*.

Fig. 18

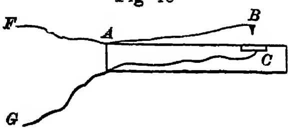

This constitutes a *make-circuit key*. It is easy to see how the arrangement may be reversed, so that by pressing the spring the continuity of the wire is interrupted, constituting a *break-circuit key*. Now, whenever the observer taps on his key he will produce upon his graduated time scale a mark similar to that of the clock, but mostly distinguishable from it. For example, on a Morse-fillet, and with a break-circuit key, we have

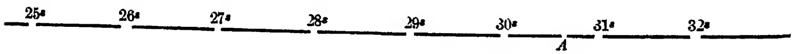

Here, at *A*, is a record of an astronomical observation occurring between the 30th and 31st second. By a scale of equal parts, we find the distance of *A* from 30^s is 0.61 of the distance from 30^s to 31^s, and hence the instant of the observation is $30^s.61$.

In order to identify the seconds on the register, a peculiar mechanical contrivance (which need not be described here) is employed, by means of which one of the breaks is omitted at the beginning of each minute of the clock; thus, for example

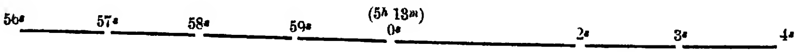

The observer has only to identify the minute and write it on the fillet, as in this example. For greater security, sometimes, every fifth minute is also distinguished by the omission of two consecutive breaks, thus

A record on a cylindrical register stands thus

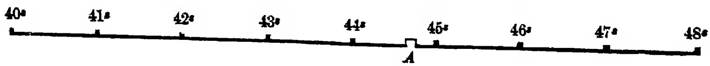

where the observation *A* occurs at $44^s.71$. The observer's signal is generally distinguishable from the clock signals, as in this example, by its form.

In all the forms of recording it must be observed that the *beginning* of the break, or dot, marks the point of time recorded.

In order to read off the record with the greatest convenience, a glass scale is used, on which are etched eleven equidistant parallel lines, dividing the second of the chronograph into tenths; the hundredths are obtained by estimation (Plate I Fig 3)

When the length of a second on the register is greater than the perpendicular distance of the extreme lines of the scale, we have only to place the scale obliquely on the line of seconds, always causing their extreme lines to pass through two consecutive second dots Sometimes the lines on the scale are made divergent, it is then always applied so that the line of seconds shall be perpendicular to the middle line of the scale, and at the point where the distance of the extreme lines is equal to the length of the second (Plate I Fig 2)

76 When the pen of the chronograph is made to press upon the paper by the attraction of the electro-magnet upon its armature, a certain small fraction of time elapses after the closing of the circuit (by the clock or by the observer) before the signal is actually impressed upon the paper This time is called the *armature time* If it were certainly constant, and the same for the clock signals and for those of the observer, it would have no effect upon the difference of time between any two recorded phenomena But the armature time probably varies both with the strength of the battery and the length of the wire through which the electric current passes The variable error which would thus be introduced into our results is avoided, or at least very much reduced in magnitude, by employing *break-circuit* signals exclusively, for the interval of time between the *breaking* of the circuit and the *cessation* of the action of the magnet is probably smaller and more constant than that between the *making* of the circuit and the *commencement* of the action of the magnet

77 To give the reader a just appreciation of the degree of accuracy attained in the recording of time by the chronograph, full size specimens of the records on three different kinds of registers are given in Plate I Figs 4 and 5 are specimens of clock signals as recorded on a Morse-Fillet and Saxton's Cylindrical Register used on the United States Coast Survey Fig 6 is a specimen of clock signals and a number of actual

observations of stars' transits recorded on BOND's Spring-Governor Register, which has been obligingly furnished by Professor G P BOND Figs 2 and 3 exhibit in full size the manner in which the glass scales for reading these records are ruled. Fig 1 exhibits the reticule of a transit instrument, provided with twenty-five transit threads, for determining the longitude by the electric telegraph. (Vol. I., p 344).

CHAPTER IV.

THE SEXTANT, AND OTHER REFLECTING INSTRUMENTS

78 THE SEXTANT, of all astronomical instruments, is the most especially adapted to the purposes of the navigator and the scientific explorer, as it is at once portable and extremely simple of manipulation, requires no fixed support, and furnishes its data with the least expenditure of the time of the observer Being held in the hand, and having small dimensions, the extreme accuracy of fixed instruments is not to be expected from it, but in the hands of a practised observer the precision of the results obtained with it is often surprising *

79 The optical principle upon which the sextant and other reflecting instruments are founded is the following "If a ray of light suffers two successive reflections in the same plane by two plane mirrors, the angle between the first and last directions of the ray is twice the angle of the mirrors"

Let M and m, Fig. 19, be the two mirrors Since the direct and reflected rays are always found in a plane perpendicular to the reflecting surface,—called the *plane of reflection*,—it follows that, after two successive reflections from two surfaces, the last direction of the ray will be found in the same plane as the first only when the plane of reflection is perpendicular to both mirrors In the diagram, let the plane of reflection be that of the paper,

* The first *inventor* of the sextant (or quadrant) was NEWTON, among whose papers a description of such an instrument was found after his death, not, however, until after its re-invention by THOMAS GODFREY of Philadelphia, in 1730, and, perhaps, by HADLEY, in 1731

the lines M and m being the intersections of this plane with the surfaces of the mirrors Let AM be the direct ray falling upon the mirror M, which we shall first suppose to lie in the direction MC, let Mm be the direction of the ray after the first reflection, and mE its direction after the second reflection Draw MB parallel to Em, MP perpendicular to MC, and Mp perpendicular to the mirror m The angle AMB is the difference of the first and last directions of the ray The angle PMp is the same as the angle contained by the mirrors, being obviously equal to MCm We have, therefore, to prove that $AMB = 2PMp$.

Fig 19

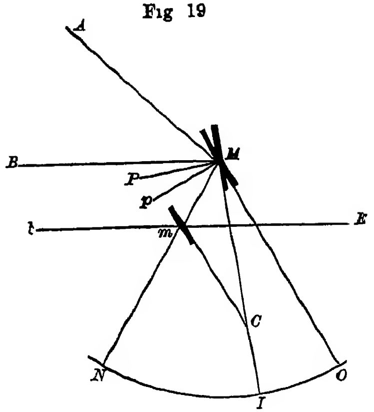

If we conceive a perpendicular drawn at m, parallel to Mp, we easily see that pMm is equal to the angle of incidence of the ray Mm falling upon m, and pMB is equal to the angle of reflection of the same ray, and since these angles, by a principle of Optics, are equal, we have

$$pMm = pMB = PMp + PMB$$

But, on the same principle, we have

$$PMm = PMA = AMB + PMB$$

The difference of these two equations gives

$$PMp = AMB - PMp$$

whence

$$AMB = 2PMp$$

80 In order to apply this principle, let the mirror M be attached to an index arm MCI, which revolves upon a pivot at M in the centre of a graduated arc OIN, and let m be permanently secured in a fixed position at right angles to the plane of this arc. Let MO be the direction of the central mirror and of the index arm when it is parallel to the fixed mirror m, and let the graduation of the arc commence at O In this position, an incident ray BM from a distant object B will be reflected first to m and then in the direction mE, which will be parallel to the

first direction BM If then the object is so distant that two rays from it, BM and bm, falling upon the two mirrors, will be sensibly parallel, an observer's eye at E will receive both the direct ray bm and the reflected ray mE at the same time Hence the observer will see two images of the same object—a direct and a reflected image—in *coincidence*

In the next place, let the mirror M be revolved into the position MCI, in which a ray AM from a second object A is reflected finally into the line mE The observer now sees the direct image of the object B in apparent coincidence with the reflected image of the object A The angular distance AMB of the two objects is then equal to twice the angle of the mirrors, that is, to twice MCm or to twice OMI The arc OI, which measures this angle, is then the measure of one-half the angular distance of the objects If the arm MI carries a vernier at I, the exact value of the arc will be obtained In order to avoid the necessity of doubling this value after reading, a half degree of the arc is numbered as a whole degree thus, an arc of 60° is divided into 120 equal parts, each of which is reckoned as a degree As the index arm MI cannot pass beyond the position MmN, where it comes against the fixed mirror, it is not found practicable, in this form of the instrument, to extend the arc OD much beyond 60°, and it is from this circumstance that the instrument derives its name

81 Plate III Fig 1 represents the most common form of the sextant constructed upon these principles

The frame is of brass, constructed so as to combine strength with lightness, the graduated arc, inlaid in the brass, is usually of silver, sometimes of gold, or platinum The divisions of the arc are usually 10′ each, which are subdivided by the vernier to 10″ The handle H, by which it is held in the hand, is of wood The mirrors M and m are of plate glass, silvered The upper half of the glass m is left without silvering, in order that the direct rays from a distant object may not be intercepted. To give greater distinctness to the images, a small telescope E is placed in the line of sight mE It is supported in a ring KK, which can be moved by means of a screw in a direction at right angles to the plane of the sextant, whereby the axis of the telescope can be directed either towards the silvered or the transparent part of the mirror This motion changes the plane of

reflection, which, however, remains always parallel to the plane of the sextant. the use of the motion being merely to regulate the relative brightness of the direct and reflected images

The vernier is read with the aid of a glass *R* attached to an arm which turns upon a pivot *S*, and is carried upon the index bar

The *index glass M*, or central mirror, is secured in a brass frame, which is firmly attached to the head of the index bar by screws *a*, *a*, *a* This glass is generally set perpendicular to the plane of the sextant by the maker, and there are no adjusting screws connected with it.

The fixed mirror *m* is usually called the *horizon glass*, being that through which the horizon is observed in taking altitudes. It is usually provided with screws by which its position with respect to the plane of the sextant may be rectified

At *P* and *Q* are colored glasses of different shades, which may be used separately or in combination, to defend the eye from the intense light of the sun

I shall first treat of those common adjustments of the sextant which the observer is obliged to attend to in the ordinary use of the instrument, and shall afterwards treat fully of its mathematical theory

82 *Adjustment of the index glass*—The reflecting surface of the glass must be perpendicular to the plane of the sextant. The simplest test of its perpendicularity is the following Set the index near the middle of the arc, then, placing the eye very nearly in the plane of the sextant, and near the index glass, observe whether the arc seen directly and its reflected image in the glass appear to form one continuous arc, which will be the case only when the glass is perpendicular The glass leans *forward* or *backward* according as the reflected image appears *too high* or *too low* It may be corrected by putting a piece of paper under one edge of the plate by which the glass is secured to the index arm, first loosening the screws *a*, *a*, *a* (Pl III Fig 1) for that purpose Or we may make the adjustment, as it is done by the instrument makers, by removing the glass and filing down one of the metallic points against which the glass bears when secured in its frame

83 *Adjustment of the horizon glass*—This must also be perpen-

dicular to the plane of the sextant The index glass having been previously adjusted, if by revolving it (by means of the index arm) there is found one position in which it is parallel to the horizon glass the latter must also be perpendicular to the plane of the sextant The test of this parallelism is the following Put in the telescope, and direct it towards a star Move the index until the reflected image of the star appears to pass the direct image If one image passes exactly over the other, it will be possible to bring both into exact coincidence, so as to form but a single image, and it is evident that when this coincidence takes place the mirrors must be parallel If one image passes on either side of the other, the horizon glass needs adjustment

The perpendicularity of the horizon glass may also be tested as follows. Hold the instrument so that its plane shall be nearly vertical, and bring the direct and reflected images of the sea horizon into coincidence Then incline the instrument until its plane makes but a small angle with the horizon, if the images still coincide, the two glasses are parallel consequently, if the index glass is perpendicular to the plane of the sextant, the horizon glass is also in adjustment

Any distant and well defined terrestrial object may be substituted for the star or the sea horizon A star, however, is to be preferred, and one of the third magnitude will afford greater precision than the brighter ones

84. *Adjustment of the telescope*—The sight-line of the telescope must be parallel to the plane of the sextant Two parallel wires or threads are placed in the telescope, which are to be made parallel to the plane of the sextant by revolving the sliding tube containing them; then all contacts or coincidences of images are to be made midway between these two wires The sight-line of the sextant telescope is, therefore, a line drawn through the optical centre of the object lens and the middle point between these parallel threads

Select two objects from 100° to 120° apart, as the sun and moon, and bring the reflected image of one into contact with the direct image of the other, at the thread nearest the plane of the instrument, then move the instrument so as to throw the images upon the other thread, if the contact remains perfect, the line of sight midway between the threads is parallel to the

plane of the sextant. If the limbs of the two objects appear to *separate* on the thread farthest from the instrument, the object end of the telescope *droops* towards the sextant, otherwise it rises

It is to be observed that when the telescope is adjusted and two images are brought into contact at either thread, they will not be in contact in the middle of the field, but will there overlap, consequently, the reading of the sextant will be less for a contact in the true sight-line in the middle of the field than for one on either side If the telescope is out of adjustment, the middle of the field is no longer in the true sight-line, and the contacts observed there give angles which are too great The correction for a given inclination of the telescope will be investigated in a subsequent article.

This adjustment may also be examined as follows Place the sextant horizontally on a table, and place two small metallic sights *A*, *A* (Fig 20) on the arc At a distance of at least 15 or 20 feet, let a well defined mark be placed so as to be in the same straight line with the upper edges of the sights, and in such a position that it may also be seen through the telescope. The top edges of the sights should be at the same distance from the plane of the sextant as the axis of the telescope The threads of the telescope being made parallel to the plane of the sextant, the mark should be seen in the middle between them

Fig 20

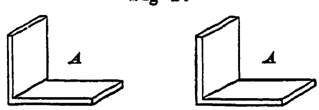

The adjustment of the telescope when necessary is effected by means of two small opposing screws in the ring which carries it

85 *The index correction* —Having made the preceding adjustments, it is necessary to find the point of the graduated arc at which the zero of the vernier falls when the two mirrors are parallel, for all angles measured by the instrument are reckoned from this point (Art. 80) If this point is to the left of the actual zero of the scale by a quantity r, all readings in the arc will be too great by r, if it is to the right of the actual zero, all readings will be too small by the same quantity If we wish the reading to be zero when the mirrors are parallel, we must place the zero of the vernier on the zero of the arc, and then revolve the horizon glass about a vertical line, until the direct

and reflected images of the same object coincide Some instruments are provided with a pair of opposing screws by which this revolution can be effected, but in others no such adjustment is possible In fact, the adjustment is unnecessary, as we can always determine the correction to be applied to our readings to reduce them to what they would be if the adjustment were made This *index correction* is found as follows.

1st *By a star* —Bring the direct and reflected images of a star into coincidence, and read off the arc The index correction is numerically equal to this reading, and is positive or negative according as the reading is on the right or the left of the zero For example, the direct and reflected images of a star being in coincidence, we read on the arc 5′ 20″, then, calling the index correction x, we have

$$x = -5' 20''$$

In another sextant the direct and reflected images of a star being in coincidence, we read on the extra arc 2′ 40″, then

$$x = +2' 40''$$

This method may be used with the sea-horizon instead of a star, but not with great precision

2d *By the sun* —Measure the apparent diameter of the sun by first bringing the upper limb of the reflected image to touch the lower limb of the direct image, and again by bringing the lower limb of the reflected image to touch the upper limb of the direct image. Denote the readings in the two cases by r and r', then, if $s =$ the apparent diameter of the sun and R is the reading of the sextant when the two images are in coincidence, we have

$$r = R + s$$
$$r' = R - s$$

whence

$$R = \tfrac{1}{2}(r + r')$$

and the index correction is $x = -R$ The practical rule derived from this is as follows If the reading in either case is *on* the arc, mark it with the *negative* sign, if *off* the arc (*i e* on the extra arc), mark it with the *positive* sign; then the index correction is one-half the algebraic sum of the two readings For example, we have read as follows.

On the arc	$-31' 20''$
Off the arc	$+33\ 10$
	$+\ 1\ 50$
	$x = +\ 0' 55''$

We have $s = \frac{1}{2}(r - r')$ hence, if the observations are good, we ought to find that half the algebraic difference of the readings is equal to the sun's diameter as given in the Ephemeris on the day of the observation But, in order that this comparison may be a good criterion, we should measure the sun's *horizontal* diameter, which is not sensibly affected by refraction (Vol I. Art 134)

In order to obtain the index correction with the greatest precision, the mean of a number of measures of the sun's diameter should be taken

EXAMPLE —March 15, 1858, the following measures of the sun's horizontal diameter were taken

	On the arc	Off the arc
	$-31' 20''$	$+33' 10''$
	" 10	" 0
	" 15	" 20
	" 25	" 15
	" 20	" 10
	" 20	" 10
Means	$-31\ 18\ 3$	$+33\ 10\ 8$
		$-31\ 18\ 3$
		$x = +\ 56''\ 3$
Observed sun's diameter,		$s = 32' 14''\ 6$
By the Ephemeris,		$s = 32\ 13\ 3$

86 *To measure the angular distance of two objects with the sextant* — Place the threads of the telescope parallel to the plane of the instrument Direct the telescope towards the fainter of the two objects, and revolve the sextant about the sight-line until its plane produced passes through the other object, observing to have the index glass on the side towards this object Then move the index until the reflected image of the second object is nearly in contact with the direct image of the first, clamp the index, and make an exact contact (at the middle point between the threads) by means of the tangent screw The reading of the arc will be the *instrumental distance* applying to this the index correction according to its sign, the result will be the *observed distance.*

In order to make a good observation, it is important that th
two images whose contact is observed should be equally bright
Hence, we direct the telescope towards the fainter object, so tha
it may be the brighter one which suffers the double reflection
But in observing the distance of the moon from a star it wil
generally be found that, even after the double reflection, the imag
of the moon is so bright that the star will appear very indistinc
unless the telescope is raised (by the screw for that purpose) s
that the sight-line is directed through the transparent part of th
horizon glass, for then, a portion of the reflected rays from th
moon being lost, the intensity of its light is rendered mor
nearly equal to that of the star When the distance of the su
and moon is observed, the telescope is usually directed toward
the moon, and the intensity of the sun's rays is diminished b
putting one or more of the colored shades between the index an
horizon glasses It will be found necessary in this case also t
regulate the distance of the telescope from the plane of th
instrument, in order to give the image of the moon the sam
intensity as that of the sun It is a common error of inexpe
rienced observers with the sextant to have the images too bright
It is essential to a good observation, 1st, that the images be wel
defined by carefully adjusting the focus of the telescope, 2d, tha
they be so faint as not in the least to fatigue the eye, yet perfectl
distinct, 3d, that their intensities should be as nearly as possibl
equal

In the case of the moon and a star, we observe the distance o
the star from that point of the moon's bright limb which lies i
the great circle joining the star and the moon's centre T
ascertain that this point has actually been brought into contac
with the star, the sextant must be slightly revolved or *vibrate*
about the sight-line (which is directed towards the star), thu
causing the moon to sweep by the star, the limb of the moo
should appear to graze the star as it passes, or, rather, the lim
should pass through the centre of the star's light, for in th
feeble telescope of the sextant the star does not appear as a wel
defined point

In the case of the moon and a planet we bring the reflecte
image of the moon's limb to the *estimated* centre of the planet.

In the case of the moon and the sun, the contact of the neares
limbs is observed, vibrating the instrument as above stated, an
making the limbs just touch as they pass each other.

It facilitates the observation of lunar distances to set the index approximately upon the angular distance before commencing the observation The approximate distance for a given time may be found from the Ephemeris (see Vol I Art 65), the distance thus found is in the case of the sun and moon to be diminished by the sum of the semidiameters of the two bodies (say 32′), and in the case of the moon and a star or planet it is to be diminished or increased by the moon's semidiameter (say 16′), according as the bright limb is nearer to or farther from the star than the moon's centre This proceeding is also a check against the mistake of employing the wrong star

87. *To observe the altitude of a celestial body with the sextant and artificial horizon*—The artificial horizon is a small rectangular shallow basin of mercury, over which is placed a roof, consisting of two plates of glass at right angles to each other, to protect the mercury from agitation by the wind The mercury affords a perfectly horizontal surface which is at the same time an excellent mirror.* If MN (Fig 21) is the horizontal surface of the mercury, SB a ray of light from a star, incident upon the surface at B, BA the reflected ray, then an observer at A will receive the ray BA as if it proceeded from a point S' whose angular depression MBS' below the horizontal plane is equal to the altitude SBM of the star above that plane If then SA is a direct ray from the star, parallel to SB, an observer at A can measure with the sextant the angle $SAS' = SBS' = 2SBM$, by bringing the image of the star reflected by the index glass into coincidence with the image S' reflected by the mercury and seen through the horizon glass The instrumental measure, corrected for index error, will be double the apparent altitude of the star

Fig 21

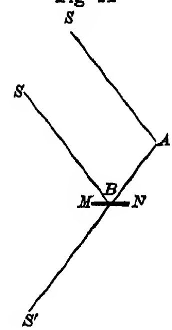

The sun's altitude will be measured by bringing the lower

* Observers are sometimes annoyed by impurities in the mercury which float on its surface, and imagine that it is important to have very pure distilled mercury I have found it preferable to use mercury amalgamated with tin (a few square inches of tin foil added to the mercury of an ordinary horizon will answer) When the mercury is poured out, a scum of amalgam will cover its surface this scum can be drawn to one side of the basin with a card or the smooth edge of a folded piece of paper, leaving a perfectly bright reflecting surface, entirely free even from the minutest particles of dust.

limb of one image to touch the upper limb of the other Half the corrected instrumental reading will be the apparent altitude of the sun's *lower* or *upper* limb, according as the *nearest* or *farthest* limbs of the direct and reflected suns were brought into contact For examples, see Vol I Arts 145, 151, &c

In observations of the sun with the artificial horizon, the eye is protected by a single dark glass over the eye piece of the telescope, thereby avoiding the errors that might possibly exist in the dark glasses attached to the frame of the sextant

The glasses in the roof placed over the mercury should be made of plate glass with perfectly parallel faces If they are at all prismatic, the observed altitude will be erroneous The error may be removed by observing a second altitude with the roof in reversed position, and, in general, by taking one-half of a set of altitudes with the roof in one position and the other half with the roof in the reverse position It is easily proved that the error in the altitude produced by the glass will have different signs for the two positions · so that the mean of all the altitudes will be free from this error

Instead of the mercurial horizon, a glass plate is sometimes used, standing upon three screws, by means of which it is levelled, a small spirit level being applied to the surface to test its horizontality The lower surface of the plate is blackened, so that the reflexion of the celestial object takes place only at the upper surface.

88 In the observation of the altitude of a star with the artificial horizon, it requires some practice to find the image of the star reflected from the sextant mirrors, and sometimes, when two bright stars stand near each other, there is danger of employing the reflected image of one of them for that of the other A very simple method of avoiding this danger, by which the observation is also facilitated, has been suggested by Professor KNORRE, of Russia * From very simple geometrical considerations it is readily shown that at the instant when the two images of the same star—one reflected from the artificial horizon, the other from the sextant mirrors—are in coincidence, the inclination of the index glass to the horizon is equal to the inclination of the sight-line of the telescope to the horizon glass, and is,

* *Astron Nach*, Vol VII p 262

therefore, a *constant angle*, which is the same for all stars. If, therefore, we attach a small spirit level to the index arm, so as to make with the index glass an angle equal to this constant angle, the bubble of this level will play when the two images of the star are in coincidence in the middle of the field of view. With a sextant thus furnished, we begin by directing the sight line towards the image in the mercury, we then move the index until the bubble plays, taking care not to lose the image in the mercury; the reflected image from the sextant mirrors will then be found in the field, or will be brought there by a slight vibratory motion of the instrument about the sight line.

It is found most convenient to attach the level to the stem which carries the reading glass, as it can then be arranged so as to revolve about an axis which stands at right angles to the plane of the sextant, and thus be easily adjusted. This adjustment is effected by bringing the two images of a known star, or of the sun, into coincidence, then, without changing the position of the instrument, revolving the level until the bubble plays.

89. Observations on shore may be rendered more accurate by means of a stand to which the sextant can be attached, and which is so arranged that the sextant can be placed in any required plane and there firmly held. The manipulation must be learned from the examination of the stands themselves, which are made in various forms.

90. On account of the feeble power of the sextant telescope and consequent imperfect definition of the sun's limb, the apparent diameter of the sun is somewhat increased. This error, however, may be removed by taking the mean of two sets of altitudes, one of the lower limb and one of the upper limb.

91. *To measure an altitude of a celestial object from the sea horizon.*—Direct the telescope towards that part of the horizon which is beneath the object. Move the index until the image of the object reflected in the sextant mirrors is brought to touch the horizon at the point immediately under it. To determine this point, the observer should move the instrument round to the right and left (by a swinging motion of the body, as if turning on his heel), and at the same time vibrate it about the sight line, taking care to keep the object in the middle of the field of view,

the object will appear to sweep in an arc the lowest point of which must be made to touch the horizon, by a suitable motion of the tangent screw

In general, altitudes for determining the time should be taken when the altitude varies most rapidly, and this is near the prime vertical. (See Vol. I Arts 143 and 149) If the object is the sun, the lower limb is usually brought to touch the horizon, if the moon, the bright limb

The apparent altitude of the point observed is found by correcting the sextant reading for the index error, and subtracting the dip of the horizon (Vol I Art 127) To obtain the apparent altitude of the sun's or moon's centre, we must also add or subtract the *apparent* semidiameter (Vol I Art 135)

92 As the sea horizon is often enveloped in mist, even when the celestial bodies are visible, various attempts have been made to obtain an artificial horizon adapted for use on shipboard. The simplest apparatus heretofore proposed for the purpose is that of Capt. BECHER, of the English Navy "Outside the horizon glass of the sextant is a small pendulum about an inch and a half long, suspended in oil (in order to check its sudden oscillations), to the pendulum is attached a horizontal arm, carrying at the inner end a slip of metal which is seen in the field of the telescope at the usual focus, and whose upper edge when it coincides with a given line is the true horizon The error is easily determined by a known altitude, and is the same for all altitudes The apparatus, which is in a very compact form, is easily attached to any reflecting instrument, and is shipped and unshipped at pleasure. A lamp is attached for observing at night"* With this apparatus, when the motion of the ship is not too great, an altitude can be obtained within 5′ by a practised observer, and this is often sufficient

93 *Method of observing equal altitudes with the sextant*—Some observers set the sextant at pleasure, and note two instants, namely, the contact of the nearest and farthest limbs of the two images of the sun (one from the sextant, and the other from the mercurial horizon), both morning and evening, without touching

* RAPER'S *Practice of Navigation*, 2d edition, p 151 It does not appear, however, how the slip of metal behind the horizon glass could be distinctly seen in the field of the *telescope* A plain tube must be used

the index in the mean time With a star they obtain but one observation on each side of the meridian This practice is designed to secure the condition that the altitudes observed before and after meridian shall be absolutely identical, which may not be the case of the index if the sextant is moved and brought back again to the same reading The errors to be feared, however, from not setting the index correctly on a given reading, are, in general, so much less than errors of observation, that it is better to sacrifice this merely theoretical consideration for the sake of multiplying the observations The following method will be found convenient in practice

1st *For the sun*—In the morning, bring the lower limb of the sun, reflected from the sextant mirrors, and the upper limb of that reflected from the mercury, into approximate contact; move the 0 of the vernier forward (say about 10′ or 20′) and set it on a division of the limb; the images will now appear *overlapped*, and will be *separating;* wait for the instant of contact: note it by the chronometer, and immediately set the vernier on the next division of the limb, that is, 10′ in advance, note the instant of contact again, and proceed in the same manner for as many observations as are thought necessary. If the sun rises too rapidly, let the intervals on the limb be 20′

Now, find (roughly) the time when the sun will be at the same altitude in the afternoon, and just before that time set the vernier on the last altitude noted in the morning (of course employing the same sextant), the images will be *separated*, but will be *approaching,* wait for the instant of contact note it by the chronometer, set the vernier *back* to the next division of the limb (10′ or 20′, as the case may be), note the contact again, and so proceed until all the A.M. altitudes have been again noted as P M altitudes

If, instead of noting the times directly by the chronometer, a watch is employed (compared with the chronometer both before and after each observation), it will generally be found necessary to allow for its gain or loss on the chronometer, so as to obtain the exact difference between the two at the instant of observation

The mean of all the A M chronometer times and the mean of all the corresponding P M times are regarded as two simple observations of the same altitude, and the computation proceeds from these according to the method and example of Vol. I Art. 140

2d *For a star.*—Set the sextant, and note the *coincidences* of the

two images of the star in the same manner as the contacts of the sun's limbs are observed.

In selecting stars for this observation, it is to be observed that the nearer the zenith the star passes, the less may the elapsed time be; and when the star passes exactly through the zenith, the two altitudes may be taken within a few minutes of each other. But with the ordinary sextants altitudes near 90° cannot be taken with the artificial horizon, as the double altitude is then nearly 180°. The prismatic sextants and circles of Pistor and Martins are adapted for measuring angles of all magnitudes up to 180°, and are, therefore, especially suitable for these observations.

94. *To examine the colored glasses.*—The two faces of any one of the colored glasses, or shades, may not be parallel. The glasses then act like prisms with small refracting angles, which change the direction of the rays passing through them, and, consequently, vitiate the angles measured. To examine them, measure the sun's diameter with a suitable combination of shades; then invert one of the shades, turning it about on an axis perpendicular to the plane of the sextant, and repeat the measure; the half difference of the two measures will be the error produced by that shade. A number of measures must, of course, be taken in both positions of the shade, in order to eliminate accidental errors of observation.

In order to save the necessity of this examination, the shades are so arranged in Pistor and Martin sextants that they may be instantaneously reversed. We have then only to take one-half of a set of observations with one position of the shades, and the other half with the reverse position, and take the mean of all the measures, in order fully to eliminate the errors of these glasses.

95. *To find the constant angle between the sight line and the perpendicular to the horizon glass.*—A knowledge of the value of this angle will be useful in following out the theory of the errors of the sextant in the subsequent articles. It varies in different instruments, and must be found for each by a special examination. Let the sextant be placed on a firm horizontal support; direct the sight line towards a distant object B, Fig. 22, and bring the two images of the object into coincidence. The mirrors M and m are then parallel; and, if we put

$\beta =$ the angle between the sight line and the perpendicular to the horizon glass,

we have

$$BMm = MmE = 2\beta$$

We have, therefore, only to find some means of measuring the angle BMm. Leaving the sextant in its present position, place a theodolite in the line Mm produced, with its telescope TN on a level with the sextant mirrors and looking into the index glass, adjust it so that the image of B reflected from M shall be seen upon the cross-wire w in the focus. Rays from w passing through the object glass N emerge in parallel lines, as if from an infinitely distant object lying in the direction MNT. Bring the sextant telescope to look into the theodolite telescope, and reflect the image of B to the *cross-wire*: the reading of the sextant corrected for the index error is the measure of the angle BMm, or of 2β. If the object is not very distant, the angle subtended by the distance Mm at the object may be appreciable. This angle may be called the *sextant parallax*, and denoted by p. We shall have

Fig 22

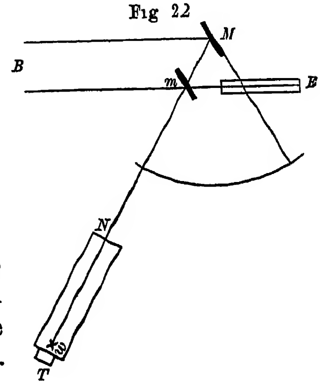

$$BMm = 2\beta - p$$

When the object and its reflected image are in coincidence, let the reading be R, and let x be the true index correction for an infinitely distant object, then we have

$$R + x = -p \tag{58}$$

and when the object is reflected to the cross-wire of the theodolite, let the sextant reading be R', then we have

$$R' + x = 2\beta - p \tag{59}$$

and from these two equations,

$$R' - R = 2\beta \tag{60}$$

By this method I found for one of TROUGHTON'S sextants, at the Naval Academy, $2\beta = 33° \, 6'$.

96. *The sextant parallax* for an object at a known distance is found with the aid of the angle β. Let

f = the distance of the index and horizon glasses,
d = the distance of the object from the index glass.

The perpendicular drawn from M upon mE is equal to $f \sin 2\beta$, and for the angle p at the object, subtended by this perpendicular, we have

$$\sin p = \frac{f \sin 2\beta}{d} \qquad \text{or} \qquad p = \frac{f \sin 2\beta}{d \sin 1''} \tag{61}$$

From this formula we may find a rough value of β when p has been determined for a near object by means of (58) and f and d are carefully measured.

The distance of an object for which the sextant parallax will be $1''$ will be found by the equation $d = f \sin 2\beta \operatorname{cosec} 1''$. In the sextant mentioned in the preceding article we have $f = 3$ inches, whence $d = 5.33$ miles.

In measuring horizontal angles between terrestrial objects, the effect of the sextant parallax may be eliminated by determining the index correction from the object which is seen directly through the horizon glass. This index correction will involve the parallax, and, when applied to the sextant reading of the angular distance between the objects, will give the angle subtended by the objects at the centre of the sextant. The sextant must, of course, remain in the same position in the measure of the angle and the determination of the index correction.

97. *To determine the error produced by a prismatic form of the index glass.*—Let us first consider the case of a glass with parallel faces. Let MM', NN', Fig. 23, be the parallel faces, of which NN' is silvered. An incident ray AB is refracted by the glass at B, and takes the direction BC; at C it is reflected into CB', and at B' it is refracted into BA'. If we put

Fig. 23

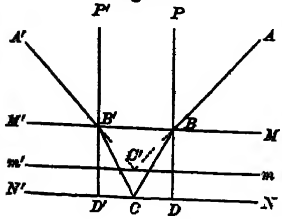

m = the index of refraction for glass,
φ = the angle of incidence ABP,
ϑ = the angle of refraction DBC,
$\varphi' = A'B'P'$,
$\vartheta' = D'B'C$,

we have, by Optics,

$$\sin\varphi = m \sin\vartheta$$
$$\sin\varphi' = m \sin\vartheta'$$

But when the faces MM' and NN' are parallel, the normals BD and $B'D'$ are also parallel, moreover, the incident ray BC upon NN', and the reflected ray CB', make equal angles with DD' hence, also $\vartheta = \vartheta'$, and, consequently, $\varphi = \varphi'$ If AB and $A'B'$ are produced to meet in C'', we see that $A'B'$ has the same direction that it would have had if it had been reflected directly from the plane surface $mC'm'$ parallel to MM' or to NN' The refraction which the ray suffers in passing through the glass, therefore, produces no error when the surfaces of the glass are parallel. It may here be remarked, also, that it is not necessary that the reflecting surface of the mirror should stand exactly over the centre of the arc of the sextant

Let us next consider the case of a glass whose faces are not parallel, as $M'B$, $N'D$, Fig 24, which, produced to meet in M, form a prism $MM'N'$. Let us assume that these faces are perpendicular to the plane of the sextant, and, consequently, that the refracting edge of the prism is also perpendicular to this plane The incident and reflected rays will be found in a plane parallel to that of the sextant The ray being traced through the glass, we shall have, as before, employing the same notation,

Fig 24

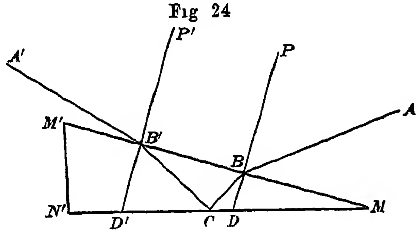

$$\left.\begin{aligned}\sin\varphi &= m \sin\vartheta \\ \sin\varphi' &= m \sin\vartheta'\end{aligned}\right\} \qquad (62)$$

but here ϑ and ϑ' are no longer equal If we put

$$M = \text{the angle of the prism} = M'MN'$$

we shall evidently have

$$90^\circ - \vartheta = CBB' = BCD + M$$
$$90^\circ - \vartheta' = CB'B = B'CD' - M$$

and, since $BCD = B'CD'$, the difference of these equations gives

$$\vartheta' - \vartheta = 2M \qquad (63)$$

From (62) and (63), φ, m, and M being given, we can determine φ', or the difference $\varphi' - \varphi$. From (62) we deduce

$$\cos \tfrac{1}{2}(\varphi + \varphi') \sin \tfrac{1}{2}(\varphi' - \varphi) = m \cos \tfrac{1}{2}(\vartheta + \vartheta') \sin \tfrac{1}{2}(\vartheta' - \vartheta)$$

whence, by (63),

$$\sin \tfrac{1}{2}(\varphi' - \varphi) = m \sin M \frac{\cos \tfrac{1}{2}(\vartheta + \vartheta')}{\cos \tfrac{1}{2}(\varphi + \varphi')}$$

As M is always a very small angle, approximate values may be employed in the second member of this equation. It will be sufficient to take

$$\sin \tfrac{1}{2}(\varphi' - \varphi) = m \sin M \frac{\cos \vartheta}{\cos \varphi}$$

or

$$\varphi' - \varphi = 2 mM \sec \varphi \sqrt{1 - \frac{\sin^2 \varphi}{m^2}}$$

which may be reduced to the form

$$\varphi' - \varphi = 2 M \sqrt{1 + (m^2 - 1) \sec^2 \varphi}$$

or, finally, by putting

$$q^2 = m^2 - 1$$

to the form

$$\varphi' - \varphi = 2 M \sqrt{1 + q^2 \sec^2 \varphi} \tag{64}$$

The error varies with φ, and consequently with the angle measured. If

$$\gamma = \text{the angle given by the sextant,}$$

we have, in Fig. 19, $PMm = PMp + pMm$, or

$$\varphi = \tfrac{1}{2}\gamma + \beta \tag{65}$$

The whole error in the measured angle will be the difference of the errors produced at the reading γ and at the zero point of the sextant, and at the zero point we have $\varphi = \beta$. Hence the error will be the difference of the values of (64) for $\varphi = \frac{1}{2}\gamma + \beta$ and $\varphi = \beta$, so that, if γ' denotes the true value of the angle, we shall have

$$\gamma - \gamma' = 2 M \left[\sqrt{1 + q^2 \sec^2 (\tfrac{1}{2}\gamma + \beta)} - \sqrt{1 + q^2 \sec^2 \beta}\right] \tag{66}$$

For glass we have usually $m = 1.55$, and hence $q^2 = 1.4025$. If $M = 10''$, $\beta = 10°$, and $\gamma = 120°$, we shall find $\gamma - \gamma' = 41''$.

The effect of the error in the glass is evidently less for small values of β than for large ones. Moreover, the smaller the angle β, the larger the angle which can be measured with the sextant, for all reflection from the index glass ceases when $\varphi = 90°$, and this value gives by (65) $\gamma = 180° - 2\beta$ as the limit of possible measures with the instrument

The preceding investigation is confined to the case in which both faces of the glass are perpendicular to the sextant plane, but it suffices to show the nature of the effect produced This case is, moreover, that in which the effect is greatest

The glass reflects from its outer face as well as from its silvered face, though in a less degree If the faces are parallel, the rays from a distant object reflected from the two faces will be parallel after leaving the glass; they will, therefore, be converged to the same focus in the telescope and produce but a single image of the object But if the glass is prismatic there will be two images, a fainter image superposed upon the stronger one and not quite coincident with it The effect will be to give an image with an indistinct outline, a star will present a somewhat enlarged or elongated image We can, therefore, very readily determine whether the glass is prismatic by examining the reflected image of a star when the index is set upon a reading of about 120°

The best makers will reject a glass that does not stand this test If, however, an instrument is found to be defective in this respect, we may determine the error produced by it as follows After carefully adjusting the instrument and finding its index correction, measure a large angle between two well defined terrestrial objects Then take out the index glass and invert it (so that the edge, which was before uppermost, may now be next the plane of the instrument), readjust the instrument, determine the new index correction, and again measure the angle between the two objects Half the difference of the two measures will be the error in either measure produced by the glass The same process repeated for a number of angles of various magnitudes will furnish a table of errors, from which the error for any particular angle may be obtained by interpolation

98 *A prismatic form of the horizon glass* affects all angles, the index correction included, by the same quantity, and therefore produces no error in the results.

99. *To determine the error produced by a small inclination of the sight line to the plane of the sextant*.—The directions of lines in space are most clearly represented by points on the surface of a sphere described about an assumed centre with an arbitrary radius (Vol I Art 1) The radii drawn parallel to any given lines in space will intersect each other under the same angles as those lines, and these angles will be measured by the arcs of great circles joining the extremities of the radii on the surface of the sphere Let us here take the centre of the sextant arc as the centre of such a sphere Let O, Fig 25, be that centre, OP the direction of the perpendicular to the index glass, Op that of the perpendicular to the horizon glass. The points P and p are the poles of the great circles whose planes are parallel to those of the glasses, and may be called, briefly, the poles of the index glass and horizon glass, respectively. Let OA be the direction of the sight line When the instrument is perfectly adjusted, the lines OP, Op, and OA are in the same plane, which is parallel to that of the sextant The course of a ray which reaches the eye will be most readily followed by tracing it backwards from the eye Thus, the ray OA coinciding with the sight line is reflected from the horizon glass in the direction BO, so that $pB = pA$. It is then reflected from the index glass in the direction OC, so that $PB = PC$, and OC is therefore the direction of an object whose image is reflected to the eye in the same direction, AO, in which another object is seen directly. Hence AOC, or AC, is the angular distance of the objects. From this construction we obtain easily $AC = 2Pp$, which is the fundamental property of the sextant (Art 79)

Fig 25

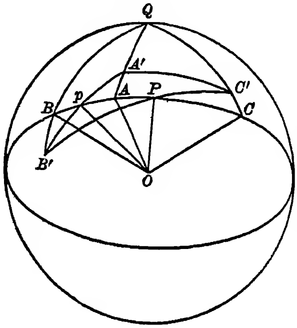

But if the sight line is inclined to the plane of the instrument, it meets the sphere in a point A' not in the great circle Pp. The inclination is measured by the arc AA' perpendicular to Pp, which is a part of the arc $QA'A$ drawn through A' and the pole Q of the great circle. The point Q may be called the pole of the sextant plane Tracing the ray OA' backwards, we observe that the plane of reflexion from the horizon glass is represented by the great circle $A'pB'$, determined by the ray and the

normal Op, so that if we take $pB' = pA'$, the reflected ray takes the direction $B'O$. The plane of reflexion from the index glass will be represented by the great circle $B'PC'$, and by taking $PC' = PB'$, OC' will be the direction of the reflected ray. Hence, $A'C'$ will be the true angular distance of the two objects observed in contact, while AC or $2Pp$ will be the angle given by the sextant. Let

$$\begin{aligned} \gamma &= \text{the angle given by the sextant} = AC, \\ \gamma' &= \text{the true angle} \qquad\qquad\quad\; = A'C', \\ i &= \text{the inclination of the sight line} = AA'. \end{aligned}$$

It is evident that $CC' = BB' = AA'$, and therefore $QA'C'$ is an isosceles triangle of which the angle $Q = \gamma$, the side $A'C' = \gamma'$, and the side QA' or $QC' = 90° - i$. If then we divide this triangle into two rectangular ones by a perpendicular from Q, we obtain

$$\sin \tfrac{1}{2}\gamma' = \cos i \sin \tfrac{1}{2}\gamma \tag{67}$$

for which, as i is always very small, we may take the approximate equation*

$$\gamma' - \gamma = - i^2 \sin 1'' \tan \tfrac{1}{2}\gamma \tag{67*}$$

According to the second method of adjustment in Art. 84, if the mark is placed at a distance of 20 feet, and if the error of its position in a vertical direction is not more than $\frac{1}{2}$ an inch (which is a large error in such a case), the telescope adjusted to it will have an inclination which will be found by the equation $\sin i = \frac{0.5}{20 \times 12}$, which gives $i = 7' 10''$. Taking this value of i, the formula (67*) gives $\gamma' - \gamma = - 0''.897 \tan \frac{1}{2}\gamma$, and for $\gamma = 120°$, $\gamma' - \gamma = - 1''.5$. The error may therefore be regarded as evanescent when ordinary care has been bestowed upon the adjustment. When the error exists, the observed angles are always too great.

100. If the contact of the images of two objects is made on either side of the middle of the field of the telescope, the actual sight line is inclined, although the axis of the telescope may be parallel, to the sextant plane.

---

* This approximate equation can be deduced from (67) or taken directly from Sph. Trig. (112).

The inclination of this actual sight line can be estimated by the aid of the angular distance of the threads To find this distance, place the threads at right angles to the plane of the sextant, bring the direct image of a distant, well defined line on one thread, and the reflected image on the other thread, and read the arc, then move the index until the images have exchanged places on the threads, and again read the arc, the half difference of the two readings is the angular distance of the two threads

Let this distance of the threads be denoted by δ, and suppose an angle γ is observed by making the contact at a distance $n\delta$ from one of the threads (the fraction n being estimated at the time of making the observation), then the inclination of the actual sight line to the true sight line corresponding to the middle point between the threads will be $i = \frac{1}{2}\delta - n\delta$, with which value of i, the correction of the observed angle γ, will be found by (67*)

The distance δ in the best sextant telescopes will not exceed 30′ When the instrument is held in the hand, we cannot make all contacts exactly in the middle of the field, but, if we assume that we can always make them at a distance greater than $\frac{1}{3}\delta$ from either thread (which a little practice will enable us to do), we shall always have $i < \frac{1}{6}\delta$, or $i < 5'$, and hence the correction $\gamma' - \gamma < 0''\,44 \tan \frac{1}{2}\gamma$ For any tolerably good observer, therefore, this correction will be practically insensible

At the same time, however, we see the importance of making the contacts as near to the middle of the field as possible, since the error always has the same sign and all the measured angles are liable to be too great If a contact is made on either thread, and we have $\delta = 30'$, the error in γ will be $3''\,93 \tan \frac{1}{2}\gamma$, or $6''\,8$ for $\gamma = 120°$

101 The distance δ of the threads may also be used to find the inclination of the axis of the telescope, or rather of the true sight line. Measure an angular distance of 120° or more, between two well defined objects, bring the images in contact first on one thread and then on the other (the threads being placed parallel to the plane of the instrument), and let the readings on the arc be γ and γ_1 Then, γ' being the true reading in either case, and i the inclination of the true sight line, we have

$$\gamma' - \gamma = -\left(\frac{\delta}{2} - i\right)^2 \sin 1'' \tan \tfrac{1}{2}\gamma$$

$$\gamma' - \gamma_1 = -\left(\frac{\delta}{2} + i\right)^2 \sin 1'' \tan \tfrac{1}{2}\gamma_1$$

whence, taking $\tan \frac{1}{2}\gamma = \tan \frac{1}{2}\gamma_1$ in the second members,

$$i = \frac{\gamma_1 - \gamma}{2\,\delta \sin 1''} \cot \tfrac{1}{2}\gamma \tag{68}$$

It is evident that, when i is positive, the greater measure is γ_1, taken on the thread nearest the plane of the instrument, and $\frac{\delta}{2} + i$ is the distance from this thread to the point in the field which represents a direction parallel to the plane of the sextant Hence the first method of adjusting the telescope given in Art 84

102 *To find the error produced by a small inclination of the index glass* —The horizon glass, being adjusted by means of the index glass (Art 83), may be supposed to have the same inclination Let pP (Fig 26) be the great circle of the sextant plane; let the poles of the mirrors be at P' and p', and put

Fig 26

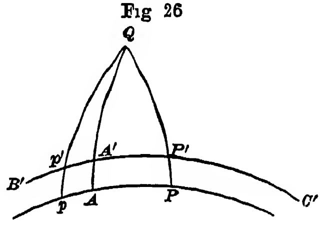

$l =$ the inclination of the index glass $= PP' =$ that of the horizon glass $= pp'$

If we suppose that the sight line is adjusted by the first method of Art 84, it will be found in a plane perpendicular to both mirrors, and its direction will be represented by a point A' in the great circle $p'P'$ The direct ray from the eye to an object A' will be reflected in the direction B', and thence to C', these points all lying in the same great circle, $A'C'$ will be the true distance γ' of the objects observed, and $p'P' = \frac{1}{2}\gamma'$ will be the true angle of the mirrors, while $pP = \frac{1}{2}\gamma$ will be the angle given by the sextant reading In the isosceles triangle $P'Qp'$, we have the angle $p'QP' = \frac{1}{2}\gamma$ and $Qp' = QP' = 90° - l$, and, dividing it into two right triangles by a perpendicular from Q, we obtain

$$\sin \tfrac{1}{2}\gamma' = \cos l \sin \tfrac{1}{2}\gamma \tag{69}$$

whence, very nearly,

$$\gamma' - \gamma = -2 l^2 \sin 1'' \tan \tfrac{1}{2}\gamma \tag{69*}$$

By the method of adjusting the index glass given in Art 82, it may easily be placed within 5′ of its true position, and for $l = 5' = 300''$, and $\gamma = 120°$, this formula gives $\gamma' - \gamma = -0''.5$ Hence, with ordinary care, this error will also be practically insignificant

The inclination of the sight line, in this solution, is variable with the angle measured Denoting it by $i' = AA'$, we readily find, by the aid of a perpendicular from Q upon $p'P'$,

$$\tan i' = \tan l \, \frac{\cos(\tfrac{1}{2}\gamma - \beta)}{\cos \tfrac{1}{2}\gamma} \tag{70}$$

in which $\beta = Ap$, or

$$i' = l \sec \tfrac{1}{2}\gamma \cos(\tfrac{1}{2}\gamma - \beta) \tag{70*}$$

103 If, however, the sight line is not determined as above supposed, but has a constant inclination to the plane of the sextant, denoted by i, its inclination to the plane of reflection $p'P'$ will be $i' - i$, and the additional error produced by this inclination will be found by (67*) to be

$$-(i' - i)^2 \sin 1'' \tan \tfrac{1}{2}\gamma$$

Combining this with (69*), the complete formula is

$$\gamma' - \gamma = -2 l^2 \sin 1'' \tan \tfrac{1}{2}\gamma - [l \sec \tfrac{1}{2}\gamma \cos(\tfrac{1}{2}\gamma - \beta) - i]^2 \sin 1'' \tan \tfrac{1}{2}\gamma$$

which can be put under the form

$$\gamma' - \gamma = -2 \sin 1'' \tan \tfrac{1}{2}\gamma \left[l^2 + \sec \tfrac{1}{2}\gamma \, [l \cos(\tfrac{1}{2}\gamma - \beta) - i \cos \tfrac{1}{2}\gamma]^2\right] \tag{71}$$

which agrees with ENCKE's formula in the Berlin *Jahrbuch* for 1830, p. 292.

Taking, as an extreme case, $l = 5'$, $i = -5'$, $\gamma = 120°$, $\beta = 30°$, this gives $\gamma' - \gamma = -4''.0$

104 *To find the error produced by a small inclination of the horizon glass* —Assuming that the index glass and the telescope are in adjustment, let the pole of the horizon glass be at p', Fig. 27, the pole of the index glass being at P, and the sight line directed towards A in the plane of the sextant The ray from the eye towards A is reflected to B' in the arc Ap', so that $p'B' = p'A$.

and thence to C', which is at the distance $CC' = BB'$ from the great circle pPC $AC = \gamma$ is the angle given by the sextant, and $AC' = \gamma'$ is the true angular distance between the two objects whose images are observed in contact

Fig 27

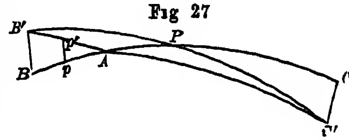

Putting

$$k = \text{the inclination of the horizon glass} = pp',$$
$$m = CC' = BB', \qquad \beta = Ap,$$

we have from the triangles App' and ABB', very nearly,

$$m = 2k \cos \beta$$

and, from the triangle $AC'C$,

$$\cos \gamma' = \cos m \cos \gamma$$

whence

$$\gamma' - \gamma = \tfrac{1}{2} m^2 \sin 1'' \cot \gamma = 2k^2 \sin 1'' \cos^2 \beta \cot \gamma \qquad (72)$$

This error is sensible only for small values of γ For $\gamma = 0$ the expression becomes infinite, for in fact it is inapplicable in this case, since when the horizon glass is inclined it is impossible to make a contact of two images of the *same point* But in the determination of the index correction by the sun, the limbs of the two images will be brought into contact alternately on each side of the true zero point of the arc, and we shall have $\gamma = \pm 0° 32'$ For this case, with $\beta = 30°$ and $k = 30''$ (which ought to be the maximum error in the adjustment by Art 83), we find $\gamma' - \gamma = \pm 0''.7$, and even this error is eliminated from the index correction itself For all angles greater than 0° 32′ the error is wholly inappreciable

105 *To find the eccentricity of the sextant*—As the arc of the sextant is limited, the method of determining whether the centre about which the index arm revolves is coincident with the centre of the graduations by means of two verniers 180° apart (Art 28) is not applicable We can find the eccentricity only by comparing various angles measured with the sextant with their known values found by some other means Thus, the angular distances of a number of terrestrial points situated in a horizontal plane may be accurately determined with a good theodolite and then also measured with the sextant

Or we may measure with the sextant the distance of two well known fixed stars and compare it with the apparent distance computed from their right ascensions and declinations The refraction, however, must be taken into account, which may be done in either of two ways 1st, The true distance of the stars will be found as in the case of the moon and a star, Vol I Art 255 Then the apparent distance will be found by the formulæ (448) and (449) of Vol I, in which we must for this case suppose h', H', d' to be the true altitudes and distance, and h_1, H_1, d_1 to be their apparent values affected by refraction The altitudes will be computed by Art 14, Vol I, the local time, and consequently the hour angles of the stars, being given

2d We may compute the zenith distances and parallactic angles of the stars for the time of the observation by Vol I Art 15, and then the refraction in right ascension and declination by Art 120 We shall then have the apparent right ascensions and declinations, from which the apparent distance will be directly computed by the method of Vol I Art 255

Now, let γ be the sextant reading, x the index correction (here supposed to be unknown, as we must regard the zero point as likewise affected by the eccentricity), γ' the true value of the measured angle, e the eccentricity, then, since the readings of the sextant are double the true arcs, we have, by (9),

$$\gamma' - (\gamma + x) = 2e \sin(\tfrac{1}{2}\gamma' + E)$$

or, putting $n = \gamma' - \gamma$,

$$x + 2e \cos E \sin \tfrac{1}{2}\gamma' + 2e \sin E \cos \tfrac{1}{2}\gamma' = n \tag{73}$$

To find the three unknown quantities x, $2e \cos E$, and $2e \sin E$, we must have three such equations derived from three angles falling in different parts of the arc,—for example, near 0°, 60°, and 120° If we have measured a large number of angles, of various magnitudes, we can treat the equations by the method of least squares

As the index correction is liable to change from one observation to another, we can let γ represent the reading corrected for the index error found at each observation, and then x will be the correction of the zero point for eccentricity.

THE SIMPLE REFLECTING CIRCLE

106 If the arc of the sextant is extended to a whole circumference, the index arm may be produced and carry a vernier upon each extremity The mean of the readings of the two verniers may then be taken at every observation, and will be wholly free from the error of eccentricity This constitutes a simple reflecting circle, the manipulation of which is in every respect the same as that of the sextant It has not only the advantage of eliminating the eccentricity, but at the same time of diminishing the effect of errors of reading and accidental errors of graduation, since every result is derived from the mean of two readings at two different divisions of the arc The only objection to the instrument is found in the slight increase of its weight

The simple reflecting circles of TROUGHTON are read by three verniers at distances of 120°, but, as the eccentricity is already fully eliminated by two verniers, the third can increase the accuracy of a result only by diminishing the effect of errors of reading and of graduation If ε_2 is the probable error of the mean of two readings, that of the mean of three readings will be

$$\varepsilon_3 = \varepsilon_2 \sqrt{\tfrac{2}{3}} = 0\ 81\, \varepsilon_2$$

so that if two verniers reduce the error to 5″ the third will only further reduce it to 4″, an increase of accuracy which for a single observation is not worth the additional complication and weight and the trouble of reading As was to be expected, these instruments, though of very refined and perfect construction, have been but little used

The prismatic reflecting circles of PISTOR and MARTINS noticed below have but two verniers, and combine many practical advantages

THE REPEATING REFLECTING CIRCLE

107 In the repeating reflecting circle the small mirror, or horizon glass, is not permanently attached to the frame of the instrument, but is attached to an arm which revolves about the centre of the instrument As the telescope must always be directed through this glass, it is also attached to the same arm and revolves with it This arm also carries a vernier at its extremity

Let ETH (Fig 28) be the revolving arm to which are attached the small mirror m, the telescope T, and the vernier, or index H, M the central mirror which is revolved by the arm MI, carrying the vernier, or index I In accordance with the nomenclature in nautical works, we shall call H the *horizon index*, and I the *central index*

Fig 28

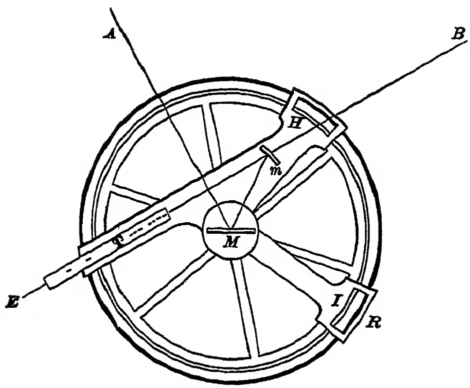

The arc is graduated from 0° to 720° in the direction HIE

Let A and B be the objects whose angular distance is to be measured First let the central index I be clamped at any assumed point of the arc Bring the plane of the instrument to pass through the two objects. Direct the telescope towards the right hand object B, and, without touching the central index, move the horizon index H (or rather revolve the instrument, keeping the telescope bearing on B), until the image of the left hand object A is reflected from the central mirror M to the horizon glass m, and thence to the eye, and thus into coincidence with the object B seen directly. This completes the first part of the observation Now, leaving the horizon index H clamped in this position, unclamp the central index I, direct the telescope to the left hand object A, Fig. 29, and move the index I forward (in the direction of the graduations) until the reflected image of the right hand object B is brought to coincide with the direct image of A. This completes the second part of the observation.

Fig 29.

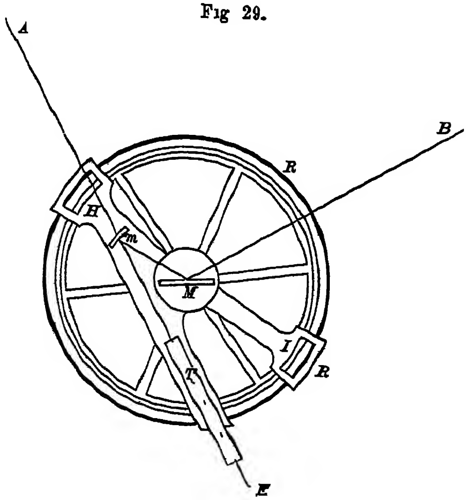

Then, *the difference between the readings of the central index in its two positions is twice the angular distance of the objects* For let R, Fig 29, be the point of reading of the central index before the first contact, and R' that after the second contact At each contact the angle of the mirrors is equal to one-half the angle measured (Art 80), and it is evident that the points R and R' are at equal distances on each side of that point of the arc at which the central index would have stood had we stopped its motion when the mirrors were parallel Hence the angle RMR' is twice the angle of the mirrors at either contact Denoting the angle measured by γ, and the readings by R and R', we have, therefore,

$$2\gamma = R' - R$$

The half difference of the two readings is then the mean of *two* measures of the required angle, while with the sextant two observations are necessary to furnish one measure of an angle, since one observation must be made to determine the index correction, which is here dispensed with

If we now recommence the observations, starting from the last position of the central index, this index will be found after the fourth contact at a reading R'', which differs from R' by twice the angle γ. so that we have

$$2\gamma = R'' - R'$$

and, consequently,

$$4\gamma = R'' - R$$

Continuing this process as long as we please, we shall have, after any even number n of contacts, a reading R_n of the central index, and

$$n\gamma = R_n - R$$

or

$$\gamma = \frac{R_n - R}{n} \tag{74}$$

Hence it is necessary to read off the arc only before the first and after the last observed contact, which is one of the greatest advantages of this instrument for use on board ship in night observations

108 If the distance of the objects is changing, as in the case of a lunar distance or an altitude, the difference between the

first and last readings will be the *sum* of all the individual measures, and the value of γ found by dividing this sum by the number of observations will be the *mean* of all these measures. The time of each observation having been noted, this value of γ will be the value of the observed angle at the mean of these times, provided the angular distance is changing *uniformly*

109. We have thus far supposed the telescope to be directed alternately towards each object, but (as in the measurement of a lunar distance, for example) it is expedient to look directly at the fainter object and reflect the brighter one. This can be done by reversing the face of the instrument after each contact, for the relative position of the mirrors will thus be inverted without requiring the line of sight to be shifted from one object to the other

It is convenient in practice to distinguish the two kinds of observation by the relative positions of the mirrors For this purpose, let a plane be conceived to be passed through the axis of the telescope at right angles to the plane of the circle; the instrument is thus divided into two portions, of which that which is on the same side of the perpendicular plane as the central mirror will be called the *right*, and that which is on the opposite side, the *left*; these designations, however, having no reference to the right and left of the observer when the instrument is held in various positions

An *observation to the right* is one in which the object reflected from the central mirror is on the right of the instrument

An *observation to the left* is one in which the object reflected from the central mirror is on the left of the instrument

A *cross observation* is one consisting of two observations, one to the right and one to the left

The observation to the right is precisely like that with the sextant. We may, in fact, use the instrument as a sextant Clamp the horizon index at any point of the arc; bring the direct and reflected images of the same object into coincidence by moving the central index, and read off this index Call this reading R, then, making any observation to the right, let the reading be R', the angle measured is $R' - R$, and $-R$ may be regarded as the index correction, as in the sextant

110. In observing altitudes with the repeating circle, the tele-

scope is directed to the image in the artificial horizon The central index is, for convenience, set upon zero, and we commence with an observation to the left, as in Fig 28, holding the instrument in the left hand The next observation is to the right, as in Fig 29, and the instrument is held in the right hand.

111 In order to facilitate the repetition of the observations, the horizon glass and telescope carry with them an inner circular arc, which is called the *finder* This finder moves under the central index arm alternately backwards and forwards in the successive observations, and, consequently, when the two places of the index arm have been once noted on the finder, it can be brought approximately to these places for the succeeding observations, whereby the images will be already approximately in contact. Two sliding *stops* are usually placed on the finder, and, when once set, serve to indicate the two positions of the central index. The finder is also roughly graduated for the same purpose

112 The adjustment and verification of the glasses and telescope are in every respect the same as for the sextant The theory of the errors is also similar, only we have a compensation of some of them which is worthy of notice and will be considered below

Dark glasses or shades are placed, as in the sextant, behind the horizon glass and between the horizon glass and central mirror, for observations of the sun In cross observations, the errors of these glasses are eliminated, since their positions with respect to the incident rays are reversed at each alternate contact In observations to the left, however, Fig 28, it is evident that when the angular distance between the objects A and B is small, colored glasses midway between M and m would intercept a portion of the direct rays from A on their way to M. In this case, therefore, it becomes necessary to substitute for them a large shade immediately in front of the central mirror The same shade serves for the observation to the right, but, as the angle of incidence of rays falling upon it is no longer the same as in the observation to the left, the error of the shade is not wholly eliminated However, as the angle of incidence is small in both positions, the errors produced by a prismatic form of the shade will be small, and the partial compensation of these

errors which occurs will leave a residual error mostly inappreciable

113. *To determine the error produced by a prismatic form of the central mirror in a cross observation with the circle.*—Let us consider the two contacts separately

1st *The observation to the right* is the same as with the sextant, and hence we have, for this observation, by (66),

$$\gamma - \gamma' = 2M\left[\sqrt{1 + q^2 \sec^2(\tfrac{1}{2}\gamma + \beta)} - \sqrt{1 + q^2 \sec^2 \beta}\right] \quad (75)$$

in which M, q, β, γ, and γ' have the same signification as in Art 97

2d In *the observation to the left*, the central mirror is reversed with respect to the incident ray, and therefore the sign of M must be changed But the angle of incidence ω is also changed Let M and m, Fig 30, be the positions of the mirrors, AM a ray from the left-hand object A reflected from the central mirror to m, and thence to E in coincidence with the direct ray from the object B Producing the faces of the mirrors, we readily find, from the triangle MCm,

Fig 30.

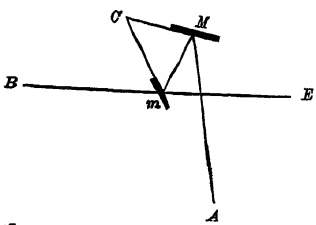

$$\varphi = \tfrac{1}{2}\gamma - \beta$$

This value is to be used in the equation (64) The error in the measured angle will be the difference of the values of (64) for $\varphi = \frac{1}{2}\gamma - \beta$ and $\varphi = -\beta$, and we shall therefore obtain for it a formula differing from (75) only in having $-\beta$ instead of $+\beta$ and $-M$ instead of $+M$. Hence the error in an observation to the left is

$$\gamma - \gamma' = -2M\left[\sqrt{1 + q^2 \sec^2(\tfrac{1}{2}\gamma - \beta)} - \sqrt{1 + q^2 \sec^2 \beta}\right] \quad (76)$$

3d For the error in *the cross observation* we have, by taking the mean of (75) and (76),

$$\gamma - \gamma' = M\left[\sqrt{1 + q^2 \sec^2(\tfrac{1}{2}\gamma + \beta)} - \sqrt{1 + q^2 \sec^2(\tfrac{1}{2}\gamma - \beta)}\right] \quad (77)$$

If we suppose, as in Art 97, $q^2 = 1.4025$, $M = 10''$, $\gamma = 120°$ $\beta = 10°$, we find, by these formulæ, that the error of an observation to the left is 41″, that of an observation to the right is 11″, and that of a cross observation is 15″ The error of the central mirror, though not wholly eliminated, is reduced to about one-third that of a sextant observation

BORDA,* to whom we owe the most important improvements in the reflecting circle, gave the numerical values of the formulæ (75), (76), and (77), in a small table with the argument γ, for a circle in which $\beta = 10°$ Table XXXIV of BOWDITCH's Navigator is derived from similar formulæ

The error produced by the central mirror for a given angle may be found by Art 97, and then by means of BORDA's table we may infer the correction for any other angle, by simple proportion

114. The errors of reading, of imperfect graduation, and of eccentricity are all nearly eliminated by taking a sufficient number of cross observations. For these errors affect only the first and last readings, and are divided by the number of observations If the sum of all the measures is very nearly 720° or 1440°, &c , so that the central index has made one or more complete revolutions, the eccentricity is wholly eliminated

The error resulting from an inclination of the sight line of the telescope is not reduced by repetition, since it makes every measure too great (Art. 99)

In theory, therefore, the repeating circle is very nearly a perfect instrument, capable of eliminating its own errors As, however, we cannot pretend to measure "*what we cannot see*," the refinement of the circle may really be thrown away, so long as the optical power of its telescope is so feeble In fact, the results obtained with the circle do not appear to have surpassed those obtained with the sextant so much as was expected from its theoretical perfection This may, however, be due, in a degree, to the mechanical imperfections arising from the centring of two axes one within another †

---

* *Description et usage du Cercle de Réflexion, par* CH DE BORDA, 4me ed Paris, 1816

† It seems that the instrument makers have supposed that it was necessary that both the horizon and the central indices should be perfectly centred In GAMBEY's circles the axis of the central index turns within that of the horizon index, and any *shake* of the latter is communicated to the former But, if we use the instrument as prescribed in the text, *reading off only the central index*, it is quite unimportant whether the horizon index is correctly centred or not It is only necessary that it should revolve in a plane parallel to the plane of the instrument, and should remain firmly clamped throughout each cross observation, and this will be secured by giving it a broad bearing about the centre The axis of the central index ought then to pass directly into the solid frame of the instrument, and the horizon index should turn upon a fixed collar, which would entirely separate it from the former From

115 The circle, as above described, is capable of measuring no angles greater than about 140°. In this respect, therefore, it does not excel the sextant. A very simple addition proposed by M DAUSSY obviates this difficulty On the horizon index arm EH, Fig 31, he places a second small mirror n, which is of only one-half the height of the silvered part of the horizon glass m The angle at which it stands is more or less arbitrary, but it is convenient to have it make an angle of about 45° with the mirror m Let A be any distant object, and let the instrument be held so that a ray An, falling upon n, shall be reflected in the line nm to m and thence to the eye at E Now move the central index until the ray AC, from the same object, is reflected from the central mirror MN in the line Cm, passing *over* the small mirror n to the horizon glass, and thence to the eye in coincidence with the first ray. (This observation is like the ordinary one of determining the zero point of a sextant or circle, only the line of sight is directed to a point about 90° from the object) The mirror MN and the small mirror n are now parallel Let R be the reading of the central index Now let B be a second object which may be even more than 180° from A reckoned in the direction HRR'. Move the central index until this object is reflected from the central mirror $M'N'$ to m, and thus into coincidence with the image of A reflected from n Let R' be the

Fig 31

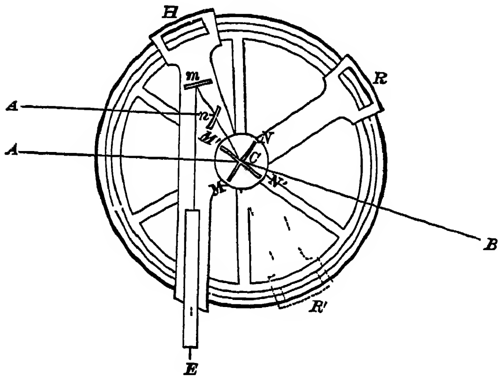

---

the fact that such a construction has not been heretofore adopted, I infer that this part of the theory of the instrument has not been well considered

If this change is made, and the instrument is used on land upon a stand, I cannot see any reason why we should not realize all the theoretical advantages of the instrument, especially if we considerably increase the optical power of the telescope

The opinion of Sir JOHN HERSCHEL (*Outlines of Astronomy*, Art 188) that "the abstract beauty and advantage of this principle" (of repetition) "seem to be counterbalanced in practice by some *unknown cause, which probably must be sought for in imperfect clamping*," is hardly sustained by practical experience with instruments having a single central axis

reading. The angular motion of the mirror MN being always equal to one-half the angular distance of the objects, $R' - R$ is the required angle. M. DAUSSY calls this contrivance a *dépressiomètre*, or *dip-measurer*, from its application to the measurement of the dip of the sea horizon, by measuring the angular distance between two diametrically opposite points of the horizon, this angular distance being 180° *plus* or *minus* twice the dip according as we measure through the zenith or through the nadir. It finds, however, another important application in observations with the artificial horizon when the altitude exceeds 65° or 70°, and the double altitude is consequently too great to be measured in the usual manner. The additional mirror is usually furnished with the *Gambey* circles, and is readily applied to any instrument. Since the angle at which it stands is not required to be found, the only adjustment necessary is to make it perpendicular to the plane of the instrument, which is done by the aid of the same test as that which is used in adjusting the horizon glass; we have only to observe that the two images of the same object A (which for this purpose may be a bright star) reflected from MN and n can be brought into coincidence in the middle of the field of the telescope, the mirrors MN and m having of course been previously adjusted.*

THE PRISMATIC REFLECTING CIRCLE AND SEXTANT

116. The prismatic reflecting circle, constructed by PISTOR and MARTINS of Berlin, differs from the simple reflecting circle (Art. 106) by the substitution of a glass prism for the horizon glass, and by the position of this prism with respect to the central mirror.

ABC, Fig. 32, represents the circle; M the central mirror upon the index arm ac, which carries a vernier at each end a and c; m the prism, which is nearer the telescope T than the central mirror, and is permanently attached to the frame of the instrument. The prism has two of its faces nearly perpendicular to each other, and the third face acts as the reflector. A ray from the central mirror entering one of the perpendicular faces is totally reflected at the inner face and passes out through the

* Special instruments for measuring the dip of the sea horizon have been contrived. For an account of TROUGHTON'S *Dip-Sector*, see SIMMS'S *Treatise on Mathematical Instruments*.

other perpendicular face in the direction of the sight line of the telescope The height of the prism is only one-half the diameter of the object lens of the telescope, and therefore direct rays from any object passing over the prism enter the telescope and are brought to the same focus as the reflected rays When the central mirror is parallel to the longest side of the prism, as in Fig 32, two images of the same object are in coincidence, and the index correction is determined as in the sextant, except that every reading is here the mean of the readings of the two verniers.

Now revolving the index into the position, Fig 33, an object

Fig 32

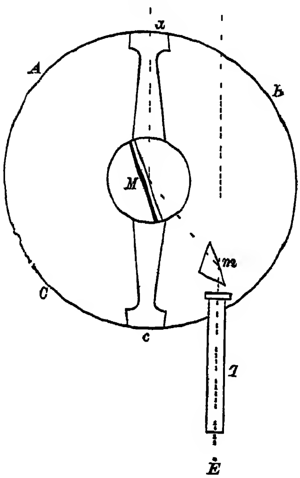

Fig 33

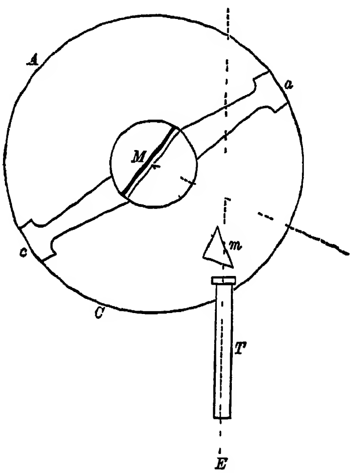

to the right will be reflected into coincidence with the direct object, and the angular distance of the two objects is given by the reading corrected for the index error When the central mirror becomes nearly perpendicular to the line *Mm*, the prism intercepts the rays from the right hand object This occurs when the angular distance of the two objects is about 130° Beyond this point the head of the observer also intercepts the rays, until we come to the position of Fig. 34

In this position two objects 180° apart can be brought into optical coincidence. But, although the prism does not interfere with the rays from the second object, the head of the observer may, and this is obviated by placing a small prism *D* at the eye end of the telescope, to reflect the two images which are in coincidence, to the eye in the direction *DE*.

Continuing the motion of the index, we see, by Fig. 35, that angles greater than 180° can now be obtained until the index arm comes against the prism, which occurs when the angle is about 280°. The angles thus measured may be reckoned either as between 280° and 180° or between 80° and 180°. Of these, the angles falling between 80° and 130° may be observed in two reversed positions of the instrument, constituting a cross observation, as with the repeating circle, whereby the index correction becomes unnecessary, and the errors arising from a prismatic form of the central mirror are partially eliminated.

Fig. 34.

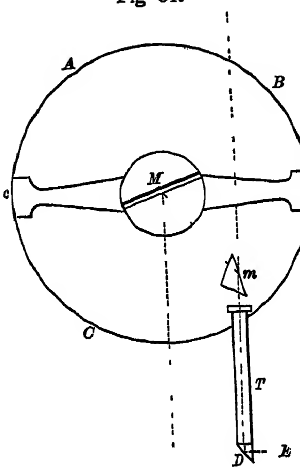

Fig. 35.

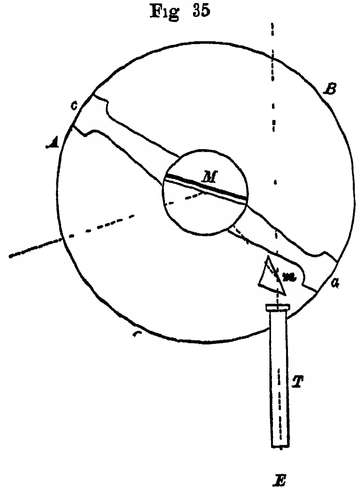

When the index is on zero, Fig. 32, the rays incident upon the central mirror make an angle with it of 20°, and in this position we obtain the feeblest reflected images. When the index is at 130°, the incident rays make an angle with the mirror of 85°, and we obtain the brightest reflected images. In the common sextant, the reverse takes place; the feeblest images occur for the angle 130° when the incident rays make an angle of only 10° with the central mirror, and the brightest images when the index is on zero and the rays make an angle of 75° with the mirror. The angles of incidence in the prismatic instruments are, therefore, more favorable for the production of distinct images than in the common sextant, since even the smallest angle which the incident rays make with the mirror in the former is double the corresponding angle in the latter.

The adjustments of the prism and central mirror are similar to those of the horizon and index glasses of the sextant

The theory of the errors is also similar to that above given for the sextant and circle

117 The advantages of these instruments over the common sextants are 1st. Angles of all magnitudes can be measured; 2d, the eccentricity is completely eliminated by always employing the mean of the readings of the two verniers, 3d, the reflected images are brighter than in other reflecting instruments, both because the angles of incidence upon the central mirror are more favorable, and because the inner face of a glass prism is a much better reflector than a silvered glass, 4th, the errors arising from a prismatic form of the central mirror are much less than in the sextant The instruments, as made by PISTOR and MARTINS combine also other improvements which might be introduced into the common sextant Thus, the shade glasses admit of reversal, by which their errors are wholly eliminated, a revolving disc, containing small colored glasses or shades, is adapted to the eye piece of the telescope, for use in taking altitudes of the sun with the artificial horizon, all lost motion is avoided in the tangent screw, by causing it to act against a spring, the arc is read off at night by the aid of a lantern which is placed over the centre of the instrument and the light of which is concentrated upon the arc by a lens

The prismatic sextant differs from the circle only in dispensing with the second vernier (the vernier *a* in the above figures), and that portion of the arc upon which it reads. The same angles can be measured with this instrument as with the circle, but without the advantage of eliminating the eccentricity

For an extensive series of observations, illustrating the capabilities of the sextant in the hands of a good observer, and especially demonstrating the excellence of the prismatic sextants, see an article of SCHUMACHER, in the *Astron Nach.*, Vol. XXIII. p. 321.

CHAPTER V

THE TRANSIT INSTRUMENT.

118 The *transit instrument* is an instrument for determining the instant of a star's passage through any given vertical plane, or (which is the same thing) the time of a star's *transit* over any given vertical circle For this purpose, it is necessary that the motion of the telescope be confined to the vertical plane, and this is effected by attaching the tube to a horizontal axis and perpendicular to it, so that by revolving the instrument upon this axis the principal sight-line of the telescope describes a plane passing through the zenith The common theodolite may therefore be used as a transit instrument when its telescope admits of a complete revolution upon its horizontal axis

The time of transit over the assumed vertical circle is deduced from the time when a star passes a given thread placed in the focus of the objective

The instrument may be mounted in any vertical plane, but is chiefly used either in the meridian or in the prime vertical in the first position, for finding either the true local time or the right ascensions of stars, in the second, for finding either the latitude of the place of observation or the declinations of stars. When spoken of simply as "the transit instrument," however, it is usually understood to be in the meridian

It admits of some variety of form In the old and still most common form, the telescope and horizontal axis bisect each other,* and the two ends of the axis are supported on pillars between which the telescope revolves.

A second form is that in which, starting from the first form, one-half the telescope tube is dispensed with, that half which contains the object glass being retained, while the horizontal axis is made to perform the part of the other half At the intersec-

* In Halley's transit instrument (still preserved as a relic in the Greenwich Observatory) the pivots of the axis are at unequal distances from the telescope

tion of the tube with the axis is a glass prism which bends the rays from the object glass at right angles, and transmits them through the hollow axis to the eye piece which is placed at the end of this axis The chief advantage of this construction is that the observer does not have to change his position to observe all the stars which cross the plane of the telescope It has also the advantage, for a portable instrument, of diminished weight and a more compact form.

In a third form, proposed by STEINHEIL* of Munich the telescope tube is dispensed with entirely, or rather the horizontal axis is converted into a telescope, by starting from the second form just described and shortening the tube until the object glass is brought next to the prism, so that the rays are bent immediately after entering the instrument This is therefore. practically, an instrument of the second form with the telescope tube reduced to its minimum length; but, to gain sufficient focal length, the object glass and prism (which are connected together) are placed near one end of the axis. This form evidently offers the greatest advantages for a portable instrument, its want of symmetry, and the loss of light incurred by the introduction of the prism, seem to prevent its adoption for the larger instruments intended for the more refined purposes of the observatory

The principles governing the use of such instruments being essentially the same as those which apply to the transit instrument of the common form, I shall here treat exclusively of the latter

119 Plate IV represents the meridian transit instrument of the Washington Observatory, made by ERTEL AND SONS, Munich It has a focal length of 85 inches, with a clear aperture of 5 3 inches. The dimensions of all the parts may be found from the drawing. The portions of the telescope tube TT, which are made conical to prevent flexure, are screwed to the hollow cube M The conical portions of the horizontal or *rotation* axis NN are also screwed to this cube, this axis is hollow, and terminates in two steel cylindrical pivots which rest in Vs at VV It is highly important that these pivots be perfect cylinders and of precisely equal diameters.

If the whole weight of an instrument of this size were per-

---

* *Astron Nach*, Vol. XXIX. p 177.

mitted to rest upon the Vs, the friction would soon destroy the perfect form of the pivots, and hence a *portion* of this weight is counterpoised by the weights *WW*, which, by means of levers, act at *XX*, where there are friction rollers upon which the axis turns By this arrangement, only so much of the weight of the instrument is allowed to rest upon the Vs as is necessary to insure a perfect contact of the pivots with the Vs This not only saves the pivots, but gives the greatest possible freedom of motion to the telescope, the lightest touch of the finger being now sufficient to rotate the instrument upon the axis.

The counterpoises may be made to perform another important service in diminishing the *flexure* of the horizontal axis, which they will evidently do if they are applied nearer to the cube than in this instrument With cones, such as *NN*, of very broad base, the amount of flexure must be extremely small, still, with counterpoises properly placed, the necessity of making the cones so large and heavy would be obviated. (See the arrangement of the counterpoises in the meridian circle, Plate VII)

In the principal focus of the objective, at *m*, is the *reticule*, consisting of seven parallel transit threads, these are parallel to the vertical plane of the telescope and perpendicular to its optical axis (Art 5) These threads and the images of stars in their plane are observed with the eye piece *E* Eye pieces, or oculars, of various magnifying powers are usually supplied, to be used according to the nature of the object observed and the state of the atmosphere, the highest powers being available only in the most favorable circumstances. One of these eye pieces (and usually one of the lowest powers) is fitted with a mirror to throw light down the tube in observations for collimation, as will be fully explained hereafter This constitutes what is called the *collimating eye piece*, but the plan of placing a small piece of mica *outside* the eye piece (Art. 47) converts any one of the eye pieces into a collimating eye piece.

There is also a micrometer thread which moves so nearly in the plane of the transit threads as to be sensibly in the same focus This thread may be either parallel or at right angles to the transit threads according to the application of it intended, but in the simple transit instrument its use will be chiefly to determine the collimation with the mercury collimator, and then it will be most convenient to make it parallel to the transit threads For this purpose, it will be still better to substitute for

the single movable thread a *cross-thread* or two very close parallel threads

The transit threads are rendered visible at night by light thrown into the interior of the telescope through the hollow rotation axis from a lamp on either side The light is reflected down the telescope tube by a small silver mirror in the cube M, or by an open metallic ring, which does not interfere with rays from the object glass The amount of light can easily be regulated by a contrivance which it is not necessary to describe The color of the light may be varied by passing it through glass of the desired shade

The light thus thrown down the tube illuminates the *field*, and the transit threads appear as black lines upon a bright ground For very faint stars it may be necessary to reduce this field illumination to such an extent that the threads cease to be distinctly visible, and then the *direct* illumination of the threads is to be resorted to This direct illumination of the threads is effected, in the instrument here represented, by two small lamps (omitted in the drawing) suspended upon the telescope near the eye piece, which throw their light obliquely upon the threads without illuminating the field The lamps are so suspended that their flames occupy the same position relatively to the threads for all positions of the telescope The threads are thus made to appear as bright lines on a dark ground Two lamps, one on each side, are used in order to produce symmetrical illumination of the threads The threads may also be illuminated by light admitted through the axis, but so brought down the tube (by the aid of a small lens) as not to illuminate the field, this light being finally received by small reflectors near the eye piece, and by them thrown upon the threads in such a manner as to produce the required symmetrical illumination

At F and F are two small *finding circles*, also called *finding levels*, or simply *finders*, which serve in setting the telescope at any given elevation or zenith distance They will be more fully explained in connection with the portable transit instrument in the next article

The handles, A and B, which are within reach of the observer's hand, act upon a clamp and fine motion screw by which the telescope is fixed and accurately set at any zenith distance.

The inclination of the rotation axis to the horizon is measured

ith the striding level L (Art 51), which is applied to the pivots V. The feet of the level have also the form of Vs

The piers are so nearly adjusted in the first place that the Vs re nearly in a true east and west line, but a small final correction is still possible by means of screws which act horizontally pon one of the Vs In the same manner, the inclination of the axis to the horizon is made as small as we please by screws acting vertically upon the other V These screws are not shown n the drawing

In order to eliminate errors of the instrument, it is necessary o reverse the rotation axis from time to time, that is, to make he east and west ends of the axis change places The *reversing apparatus* or *car* for this purpose is shown at R It runs upon grooved wheels which roll upon two rails laid in the observatory floor between the piers PP, and is thus brought directly beneath the axis By the crank h acting upon the beveled wheels e and f, two forked arms aa are lifted and brought into contact with the axis at NN, then, continuing the motion, the telescope is lifted just sufficiently to clear the Vs, and the friction rollers at XX, the car is then rolled out from between the piers, bearing the telescope upon its arms, a semi-revolution is given to the arms, the exact semi-revolution being determined by a stop d, the car is rolled back between the piers, and the telescope lowered into the Vs It is hardly necessary to observe that the telescope is placed in a horizontal position during this operation.

An *observing couch* C runs on the rails between the piers It is so arranged that the observer reclining upon it may give his head any required elevation, and thus be able to observe stars at high altitudes without the discomfort which would destroy the accuracy of his observations

The piers PP are of granite, and rest upon a foundation of stone sunk ten feet below the surface of the ground They are wholly insulated from the walls and floor of the building

Between the piers, a granite slab about a foot broad and ten feet long is placed on a level with the floor This rests firmly upon the foundation which supports the instrument, and, like the piers, is insulated from the floor On this slab may be placed a basin of mercury at various distances from the instrument, for observing stars by reflexion

I do not propose to enter into the details of constructing the observatory itself, as many of these details will vary according to

the taste and means of the builder, but it is essential to remark that the opening in the roof and sides of the building through which the observations are to be made should be much wider than the mere aperture of the telescope, for there are always currents of air of various temperatures near the edges of the openings, which produce unsteadiness in the images of stars. A width of two feet at least should be allowed

It is also well to observe that the observing room should be large and high, that the radiation from the walls may not have too much effect upon the instrument No artificial heat should be permitted in it or near it Its temperature at the time of an observation, and that of the whole instrument, should be as nearly as possible the same as the temperature of the atmosphere outside the observatory

The indispensable companion of the transit instrument in the observatory is the sidereal clock, which is to be secured to a stone pier, resting upon a foundation which is insulated from the floor, and so placed that its dial may be seen by the observer from any position he may occupy at the telescope If, however, the transits are recorded by the chronograph (Arts 71–77) the clock may be in any part of the observatory, and a single clock may be used *for all the observations* with all the instruments It will only be necessary that each instrument should have its own chronographic register, which is graduated into seconds by the one standard clock However, a clock in the room with the instrument is still necessary to enable the observer to prepare for his observations at the proper time, but this may then be regarded as a sort of *finder* merely, and it will be necessary to regulate it only approximately

120 Plate V represents a portable transit instrument as constructed by Mr W WURDEMANN (Washington, D C) The focal length of such an instrument is usually from 24 to 36 inches

The letters common to Plate V. and Plate IV represent the same parts The peculiar feature is the portable frame *PP*, which here takes the place of the piers It is made of iron, and is made as light as possible without the sacrifice of strength and stability The screws *tt* being removed, the inclined supports *pp* fold in against the upright ones, and then the latter fold down upon the horizontal frame, and the whole frame can be placed in a box This box is deep enough to receive the telescope also The

instrument can thus be conveniently transported and set up in a few minutes upon any temporary pillar Q. In the field it will often be convenient to mount the instrument upon the trunk of a tree cut off to the required height. The frame is quickly levelled approximately by the foot screws S, S, S.

A *diagonal eye piece* E (Art. 12) is necessary for observing stars at considerable altitudes.

The eye tube of the telescope is moved out and in by a rack and pinion r, to bring the threads precisely into the focus of the object glass. The rack and pinion k carry the eye piece to the right and left so as to bring it opposite each thread in succession as a star crosses it.

The finder F consists, 1st, of a small graduated circle which is permanently attached to the telescope; 2d, of a spirit level g attached to an arm which revolves about the centre of the circle. This arm carries a vernier, and has a clamp and fine motion screw at f. When the vernier reads 0°, the axis of the level is parallel to the optical axis of the telescope, consequently, if we set the vernier to this reading, 0°, and then revolve the telescope until the bubble stands in the middle of the tube, the optical axis will be horizontal. If then we set the vernier at any other given reading R, and revolve the telescope until the bubble stands in the middle of the tube, the inclination of the telescope to the horizon will be $= R$. The altitude of a star whose transit is to be observed is known from its declination and the latitude of the place of observation, and it is usually necessary to prepare for the observation by setting the telescope at the proper altitude by means of the finder.

A rack and pinion (not shown in the drawing) serve to revolve the eye piece and micrometer so as to make the threads vertical, or rather parallel to the vertical plane of the telescope.

The illuminating lamps are shown in their position. Their light is thrown into the axis in nearly parallel lines by means of a lens in the lantern opposite the middle point of the flame, the flame being nearly in the focus of the lens.

120*. A small altitude and azimuth instrument so constructed that it may be used also as a transit instrument is called a *universal instrument*. The horizontal graduated circle renders such an instrument very convenient for observations out of the meridian. See Chapter VII.

121 *Method of observation*.—In all cases, the celestial observation made with the transit instrument consists only in noting, by a clock or chronometer, the several instants when a star or other object crosses the threads. The method of doing this with precision is as follows. The instrument remaining stationary, the diurnal motion causes the star to pass across the field of the telescope. As it approaches a thread, the observer looks at the clock and begins to count its beats; and, keeping the count in his head by the aid of the audible beats of the clock, he then turns his eye to the telescope and notes the beat when the star appears *on* the thread. The transit over the thread may, however, fall between two beats, and then the fraction of a beat is to be estimated. This estimate is made rather by the eye than the ear. Suppose the clock beats seconds. Let a, Fig. 36, be the position of the star at the last beat before the star comes to the thread, and b its position at the next following beat. The observer compares the distance from a to the thread with the distance from a to b, and estimates the fraction which expresses the ratio of the former to the latter in tenths; and these tenths are then to be added to the whole number of seconds counted at a, to express the instant of transit. Thus, if he counts 20 seconds by the clock at a, and estimates that from a to the thread is $\frac{4}{10}$ of ab, the instant of transit is $20^s.4$, which he records, together with the minute and hour by the clock.

Fig. 36

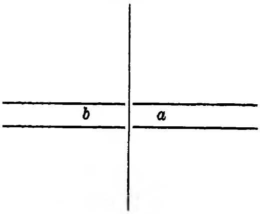

In the transit of the sun, the moon, or a planet, the instant when the limb is a tangent to the thread is noted. The mode of inferring the time of transit of the centre from that of the limb will be explained hereafter.

The most accurate method of observing transits is by the aid of the chronograph. At the precise instant when the star is *on* the thread, the observer presses the signal key and makes a record on the register, which is read off at his leisure, according to the methods explained in Arts. 71–77. The record of several transits of stars over the five threads of the Cambridge telescope is shown in Plate I. Fig. 6. Each transit is preceded by an irregular signal, produced by a rapid succession of taps on the signal key, by means of which the place of the observation on the register is afterwards readily found. As the observer is

relieved by the chronograph from the necessity of counting the seconds and estimating the fractions, the transit threads may be placed much closer to each other and their number greatly increased In the transit instruments used in the United States Coast Survey for the telegraphic determination of differences of longitude (see Vol I Art 227), the diaphragms contain twenty-five threads, arranged in groups, or "tallies," of five, as in Plate I Fig 1

GENERAL FORMULÆ OF THE TRANSIT INSTRUMENT

122 In whatever position the transit instrument may be placed, we may consider its *rotation axis* as an imaginary line, passing through the central points of the pivots, which, produced to the celestial sphere, becomes a diameter of the sphere, and the *axis of collimation* as an imaginary line, drawn from the optical centre of the object glass perpendicular to the rotation axis, and describing a great circle of the sphere as the telescope revolves The position of this great circle in the heavens is fully determined when we have given the position of the rotation axis, and the position of the rotation axis is given when we know the altitude and azimuth of either of the points in which it meets the celestial sphere

The *sight-line* marked by a thread in any part of the field is a line drawn from the thread through the optical centre of the object glass The angle which this line makes with the axis of collimation does not change as the telescope revolves so that, while the axis of collimation describes a great circle, the sight-line describes a small circle parallel to it whose distance from it is everywhere the constant measure of the inclination of the sight-line If then a star is observed on the thread, the position of the star with respect to the great circle of the instrument becomes known when we know the inclination of the sight-line or the angular distance of the thread from the axis

The general problem to which the use of the transit instrument gives rise is the following

123 *To find the hour angle of a star observed on a given thread of the transit instrument in a given position of the rotation axis* —Let Fig 37 represent the sphere stereographically projected upon the plane of the horizon, *NS* the meridian, *WE* the prime vertical. Suppose the axis of the instrument lies in the vertical

plane ZA, and that A is the point in which this axis produced towards the west meets the celestial sphere Let $N'Z'S'$ be the great circle described by the axis of collimation, A is the pole of this circle Let nOs be the small circle described by the sight-line drawn through a thread whose constant angular distance from the collimation axis is given $= c$ Let b denote the altitude, $90° + a$ the azimuth, $90° - m$ the hour angle, n the declination of the point A, φ the latitude of the observer, δ the declination of a star observed at O on the given thread Join PA, PO, AO We have

Fig 37

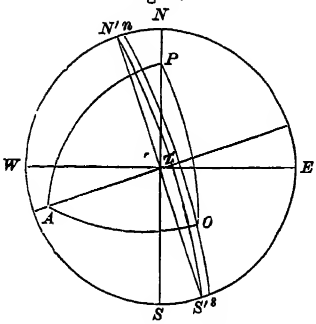

$$NZA = 90° + a, \qquad ZPA = 90° - m$$
$$ZA = 90° - b, \qquad PA = 90° - n$$
$$AO = 90° + c, \qquad PZ = 90° - \varphi$$
$$PO = 90° - \delta$$

and the triangle PZA gives the equations [Sph Trig (6), (3), (4)]

$$\left.\begin{aligned} \cos n \sin m &= \sin b \cos \varphi + \cos b \sin a \sin \varphi \\ \cos n \cos m &= \cos b \cos a \\ \sin n &= \sin b \sin \varphi - \cos b \sin a \cos \varphi \end{aligned}\right\} \quad (78)$$

which determine m and n when a and b are given Now let

$\tau =$ the hour angle of O *east* of the meridian,

then the angle $APO = 90° - m + \tau = 90° + (\tau - m)$, and the triangle APO gives

$$-\sin c = \sin n \sin \delta - \cos n \cos \delta \sin (\tau - m)$$

whence

$$\sin (\tau - m) = \tan n \tan \delta + \sin c \sec n \sec \delta \qquad (79)$$

which determines $\tau - m$, whence also τ

These general formulæ admit of simplification when the instrument is either near the meridian or near the prime vertical

THE TRANSIT INSTRUMENT IN THE MERIDIAN

124 The instrument is said to be in the meridian when the great circle described by the axis of collimation is the meridian

The axis of rotation is then perpendicular to the plane of the meridian, and, consequently, lies in the intersection of the prime vertical and the horizon If, further, the thread on which the star is observed is in the axis of collimation, the time of observation is that of the star's transit over the meridian, and, since at that instant the sidereal time is equal to the star's right ascension, the error of the clock on sidereal time is obtained at once by taking the difference between that right ascension and the observed clock time of transit (Vol I Art 138)

Practically, however, we rarely fulfil these conditions exactly, but must correct the time of observation for the small deviations expressed by a, b, and c, of which a is the excess of the azimuth of the west end of the axis above 90° (reckoned from the north point), and is called the *azimuth constant*, b is the elevation of the west end of the axis, and is called the *level constant*, and c is the inclination of the sight-line to the collimation axis, and is called the *collimation constant*

We must first show how to adjust the instrument approximately, or to reduce a, b, and c to small quantities

125 *Approximate adjustment in the meridian* —1st The middle thread of the diaphragm should coincide as nearly as possible with the collimation axis This adjustment can be approximately made before putting the instrument in the meridian, by moving the thread plate laterally until the middle thread cuts a well defined distant point in both positions of the rotation axis in the Vs

2d The middle thread (and, consequently, all the transit threads) should be vertical when the rotation axis is horizontal, that is, it should be perpendicular to the rotation axis This can be verified while adjusting the sight-line, by observing whether the distant point continues to appear on the thread as the telescope is slightly elevated or depressed After the instrument has been placed in the meridian and the axis levelled, the verticality of the threads may also be proved by an equatorial star running along the horizontal thread, which is at right angles to the transit threads

The axis, being placed nearly east and west (at first by estimation), is levelled by means of the striding level Thus c and b are easily reduced to small quantities

3d To reduce a to a small quantity, or to place the instrument

very near to the meridian, we must have recourse to the observation of stars. The following process will be found as simple as any other with a portable instrument.

Compute the mean time of transit of a slow moving star (one near the pole), and bring the telescope upon it at that time. For the first approximation, the time may be given by a common watch, and the telescope may be brought upon the star by moving the frame of the instrument horizontally. Then level the axis, and note the time by the clock of the transit of a star near the zenith over the middle thread. It is evident that the time of transit of a star near the zenith will not be much affected by a deviation of the instrument in azimuth, and therefore the difference between the star's right ascension and the clock time will be the approximate error of the clock on sidereal time. With this error, we are prepared to repeat the process with another slow moving star, this time employing the clock and causing the middle thread to follow the star by moving only the azimuth V. When the clock correction has been previously found by other means (as with the sextant), the first approximation will usually be found sufficient. The instrument is now sufficiently near to the meridian, and the outstanding small deviations can be found and allowed for as explained below.

In mounting a large transit instrument in an observatory, it will be convenient first to establish the approximate direction of the meridian with a theodolite, and to set up a distinct mark at a sufficient distance to be visible in the large telescope without a change of the stellar focus. The middle thread of the instrument can then be brought upon this mark before proceeding to the observation of stars.

4th. Finally, it is necessary to adjust the *finder* whereby the telescope is to be directed to that point of the meridian through which a given object will pass. If the finder is intended to give the zenith distance (ζ), we take

$$\zeta = \varphi - \delta - r + p \text{ for an object south of the zenith,}$$
$$\zeta = \delta - \varphi - r + p \quad \text{" \quad " north \quad " \quad "}$$

in which r is the refraction, and p the parallax of the object for the zenith distance ζ. But, for the purpose of *finding* an object merely, we may neglect r, except for very low altitudes, and p may be neglected for all bodies except the moon.

To adjust the finder, we have only to clamp the telescope when

some known star is on the horizontal thread, and in that position cause the finding circle to read correctly for that star, by means of the proper adjusting screws It will then read correctly for all other stars In large instruments the finder is sometimes graduated from 0° to 360°

With respect to the *time* when a star is to be expected on the meridian, the sidereal clock or chronometer answers as a finder, since (after allowing for its error) it shows the right ascensions of the stars that are on the meridian

126 *Equations of the transit instrument in the meridian* —By the preceding process we can always easily reduce a, b, and c to quantities so small that their squares will be altogether insensible, or, which is the same thing, we can substitute them for their sines, and put their cosines equal to unity And, since m, n, and τ will be quantities of the same order as a, b, and c, the general formulæ (78) will become

$$\left.\begin{aligned} m &= b \cos \varphi + a \sin \varphi \\ n &= b \sin \varphi - a \cos \varphi \end{aligned}\right\} \qquad (80)$$

and (79) gives

$$\tau = m + n \tan \delta + c \sec \delta \qquad (81)$$

which is BESSEL's formula for computing the correction to be added to the observed sidereal clock time of transit of a star over the middle thread to obtain the clock time of the star's transit over the meridian It is hardly necessary to observe that the unit of all the quantities a, b, c, m, n, τ should be the second of time

If now we put

$T =$ the observed clock time of the star's transit over the middle thread,
$\Delta T =$ the correction of the clock,
$\alpha =$ the star's apparent right ascension,

the true sidereal time of transit will be $T + \tau + \Delta T$, and this quantity must be equal to α Hence we have

$$\left.\begin{aligned} \alpha &= T + \Delta T + \tau \\ \text{or} \qquad \alpha &= T + \Delta T + m + n \tan \delta + c \sec \delta \end{aligned}\right\} \qquad (82)$$

by which formula the right ascension of an unknown star can be

found when ΔT and the constants of the instrument are known From the transits of known stars, on the other hand, this equation enables us to find ΔT, when the constants of the instrument are given.

The apparent right ascension in this equation should be affected by the diurnal aberration, which, by Vol I Art 393, is $0''.311 \cos\varphi \sec\delta = 0^s.021 \cos\varphi \sec\delta$ when the star is on the meridian If then α denotes the right ascension as given in the Ephemeris, the first member of (82) ought to be $\alpha + 0''.311 \cos\varphi \sec\delta$, so that the equation becomes

$$\alpha = T + \Delta T + m + n \tan\delta + (c - 0^s.021 \cos\varphi) \sec\delta \qquad (83)$$

Hence, if instead of c we take

$$c' = c - 0^s.021 \cos\varphi$$

we may use (82) without further modification, and the diurnal aberration will be fully allowed for Since, for each place of observation, the quantity $0^s.021 \cos\varphi$ is constant, there is no reason for omitting to apply this correction, although its influence is scarcely appreciable except with the larger instruments of the observatory

127 Bessel's form for the correction τ is usually the most convenient, but other forms have their advantages in certain applications. From (80) we deduce

$$\left.\begin{aligned} a &= m \sin\varphi - n \cos\varphi \\ b &= m \cos\varphi + n \sin\varphi \end{aligned}\right\} \qquad (84)$$

and from the second of these we have

$$m = b \sec\varphi - n \tan\varphi \qquad (85)$$

which substituted in (81) gives Hansen's formula,

$$\tau = b \sec\varphi + n(\tan\delta - \tan\varphi) + c \sec\delta \qquad (86)$$

This is convenient in reducing observations of stars near the zenith, where the coefficient $\tan\delta - \tan\varphi$ becomes small It shows that for a star in the zenith the correction depends only on b and c, and that in general the best stars for determining the clock correction are those which pass nearest to the zenith

If we substitute the values of m and n from (80) in (81), we readily bring it to the form

$$\tau = a\,\frac{\sin(\varphi - \delta)}{\cos\delta} + b\,\frac{\cos(\varphi - \delta)}{\cos\delta} + \frac{c}{\cos\delta} \tag{87}$$

which is known as MAYER's formula This is the oldest form, but where many stars are to be reduced for the same values of the constants, it is much less convenient than the preceding It has its advantages, however, in cases where the constant a is directly given, or in discussions in which this constant is directly sought

128 These formulæ apply directly to the case of a star at its upper culmination To adapt them to lower culminations (that is, of circumpolar stars at their transits below the pole), we observe that in the general investigation Art 123, δ represents the distance of the star from the equator reckoned towards the zenith of the place of observation, and, consequently, the formula will be applicable to lower culminations if we still represent by δ the distance of the star from the equator through the zenith and *over the pole*, that is, if we take for δ the supplement of the declination This being understood, we shall be saved the necessity of duplicating our formulæ

Again, the time of the lower culmination differs by 12^h of sidereal time from that of the upper culmination of the same star Hence, to apply the formulæ to the case of a lower culmination, it is also necessary to suppose that α represents the star's right ascension increased by 12^h.

In short, for lower culminations, we must substitute $12^h + \alpha$ and $180° - \delta$ for α and δ

129 Since the instrument may be used in two positions of the rotation axis, it is necessary to distinguish these positions We shall suppose that the *clamp* is at one end of the axis, and shall distinguish the two positions by "clamp west" and "clamp east" If the value of c has been found for clamp west, its value for clamp east will be numerically the same, but will have a different sign, for, since in reversing the collimation axis remains in the same plane,* any thread will be at the same absolute distance from this axis, but on opposite sides of it in the two positions

* Except when the pivots are unequal, the correction for which will be considered hereafter

For example, if we have found for clamp west $c = -0^s.292$, we must take for clamp east $c = +0^s.292$.

If, however, we take the diurnal aberration into account, we must observe that c' is not numerically the same in the two positions of the axis. For example, if $\varphi = 38° 59'$, the correction $0^s.021 \cos\varphi$ is $0^s.016$, and if for clamp west we have $c = -0^s.292$, we shall have for this position $c' = -0^s.292 - 0^s.016 = -0^s.308$, but for clamp east $c' = +0^s.292 - 0^s.016 = +0^s.276$.

130. In the above, we have assumed that the star has been observed on a single thread whose distance from the collimation axis is known. The same method may be applied to each thread; but when the intervals between the threads are known, each observation may be reduced to the middle thread or to a point corresponding to the "mean of the threads," and the correction c will then be computed only for this middle thread or this mean point. I proceed to show how these intervals are to be determined and applied.

THREAD INTERVALS.

131. An odd number of threads is always used, and they are placed as nearly equidistant as possible, or, at least, they are symmetrically placed with respect to the middle one, and this middle thread is adjusted as nearly as possible in the collimation axis. If the threads were exactly equidistant, the mean of the observed times of transit over all of them could be taken as the time of transit over the middle one, and this with the greater degree of accuracy (theoretically) the greater the number of threads.* But since it rarely happens that the threads are perfectly equidistant or symmetrical, it becomes necessary to determine their distances, and this is usually the first business of the observer after he has mounted his instrument and brought it approximately into the meridian.

Let i denote the angular interval of any thread from the middle thread, I the time required by a star whose declination is δ to pass over this interval. Then i, being expressed in seconds of time, will also denote the interval of sidereal time required by a star in the equator to describe the space between

---

* The practical limits to the number of threads will be considered in another place.

the threads, for this is the case in which the apparent path of the star is a great circle. Our notation, therefore, may be expressed by putting

$\iota =$ the equatorial interval of a thread from the middle thread,
$I =$ the interval for the declination δ.

If now c denotes the collimation constant for the middle thread, the distance of the side thread from the collimation axis is $\iota + c$, and if τ is the hour angle of a star when on the middle thread, $I + \tau$ is its hour angle when on the side thread. Hence, by our rigorous formula (79), applied to each thread, we have

$$\begin{aligned} \sin(I + \tau - m) &= \tan n \tan \delta + \sin(\iota + c) \sec n \sec \delta \\ \sin(\tau - m) &= \tan n \tan \delta + \sin c \sec n \sec \delta \end{aligned}$$

the difference of which is

$$2 \cos(\tfrac{1}{2} I + \tau - m) \sin \tfrac{1}{2} I = 2 \cos(\tfrac{1}{2}\iota + c) \sin \tfrac{1}{2}\iota \sec n \sec \delta$$

for which, since $\tau - m$, c, and n are here very small quantities, we may write, without sensible error,

$$\left.\begin{aligned} 2 \cos \tfrac{1}{2} I \sin \tfrac{1}{2} I &= 2 \cos \tfrac{1}{2}\iota \sin \tfrac{1}{2}\iota \sec \delta \\ \text{or} \qquad \sin I &= \sin \iota \sec \delta \end{aligned}\right\} \qquad (88)$$

From this, I can be found when ι is given. On the other hand, if I is observed in the case of a star of known declination, we deduce ι by the formula

$$\sin \iota = \sin I \cos \delta \qquad (89)$$

If the star is not within 10° of the pole, it is quite accurate to take for these the more simple forms

$$I = \iota \sec \delta \qquad \iota = I \cos \delta \qquad (90)$$

These formulæ show that the observed interval will be the greater the nearer the star is to the pole. Hence, for finding ι from observed values of I, it is expedient to take stars near the pole, since errors in the observed times will be reduced in the ratio $1 : \cos \delta$.

When the star is so near to the pole that either (88) or (89) is to be used, it will be found convenient to substitute for them the following

$$I = \iota \sec \delta \; k \qquad \iota = \frac{I \cos \delta}{k} \qquad (91)$$

in which $k = \frac{I \sin 15''}{\sin I}$, and its logarithm may be readily taken from the following table

I	log i sec δ	log k
1^m	1 778	0 00000
2	2 079	00001
3	2 255	00001
4	2 380	00002
5	2 477	00003
6	2 556	00005
7	2 623	00007
8	2 681	00009
9	2 732	00011
10	2 778	00014
11	2 819	00017
12	2 857	00020
13	2 892	00023
14	2 924	00027
15	2 954	00031

I	log i sec δ	log k
15^m	2 954	0 00031
16	2 982	00035
17	3 008	00040
18	3 033	00045
19	3 056	00050
20	3 079	00055
21	3 100	00061
22	3 120	00067
23	3 139	00073
24	3 158	00080
25	3 175	00086
26	3 192	00093
27	3 209	00101
28	3 224	00108
29	3 239	00116
30	3 254	00124

EXAMPLE 1 —If for a star whose declination is $\delta = 88° 33'$ we have observed the interval between a side thread and the middle thread to be $I = 25^m 17^s.6$, required the value of i

We have

	log I	3 18116
	log cos δ	8 40320
	ar co log k	9 99912
$i = 38^s 325$	log i	1 58348

EXAMPLE 2 —Given $i = 38^s 325$, find I for $\delta = 87° 15'$.

We have

	log i	1 58348
	log sec δ	1 31896
	log i sec δ	2 90244
	(Argument 2 902) log k	0 00024
$I = 799^s 25$	log I	2 90268

132. The thread intervals may also be found by GAUSS's method, with a theodolite, precisely as in the method of determining the value of a micrometer screw in Art 46

If the instrument is furnished with a micrometer, the value of the screw may be determined by the transits of circumpolar

stars over the micrometer thread, and then it may be employed to measure the thread intervals

REDUCTION TO THE MIDDLE THREAD

133. Suppose that the reticule contains five transit threads, and that they are numbered consecutively from the side next to the clamp, so that for "clamp west" stars at their upper culminations cross the threads in the order of their numbers Then, if we denote the observed clock times of a transit over them by t_1, t_2, t_3, t_4, t_5, and the equatorial intervals of the side threads from the middle thread by i_1, i_2 i_4, i_5 (observing that i_4 and i_5 will be essentially negative), the time of passing the middle thread according to the five observations is either $t_1 + i_1 \sec\delta$, $t_2 + i_2 \sec\delta$, t_3, $t_4 + i_4 \sec\delta$, or $t_5 + i_5 \sec\delta$, which, if the observations were perfect, would be equal to each other Taking their mean, which we shall denote by T, we have

$$T = \frac{t_1 + t_2 + t_3 + t_4 + t_5}{5} + \frac{i_1 + i_2 + i_4 + i_5}{5} \sec\delta$$

If we put

$$\Delta i = \frac{i_1 + i_2 + i_4 + i_5}{5}$$

and denote the mean of the observed times by T_0, we have

$$T = T_0 + \Delta i \sec\delta \quad \text{for clamp west,}$$
$$T = T_0 - \Delta i \sec\delta \quad \text{for clamp east}$$

If the threads are equidistant, Δi vanishes; otherwise $\Delta i \sec\delta$ is the correction to be applied to what is called the *mean of the threads*, to obtain the time of passage over the middle thread

If there are seven threads,

$$\Delta i = \frac{(i_1 + i_2 + i_3) + (i_5 + i_6 + i_7)}{7} \tag{92}$$

and so on for any number of threads

At the lower culmination, a star crosses the threads in the reverse order, and, consequently, the sign of the correction $\Delta i \sec\delta$ must be changed, but this change of sign is effected by taking for δ the supplement of the declination, according to the method pointed out in Art 128 We shall, therefore, regard the above formulæ as entirely general

A *broken transit* (one in which the transits over some of the

threads have not been observed) is reduced in the same manner, that is, we take the mean of the observed times and apply to it a correction which is the mean of the equatorial intervals of the observed threads multiplied by sec δ Thus, if only the 1st, 3d, and 4th of five threads have been observed, we have for T the several values $t_1 + i_1 \sec\delta$, t_3, $t_4 + i_4 \sec\delta$, the corresponding thread intervals being i_1, 0, i_4 so that we have

$$T = \frac{t_1 + t_3 + t_4}{3} + \frac{i_1 + i_4}{3} \sec\delta$$

In general, if we put

M = the mean of the observed times on any number of threads,

f = the mean of the equatorial intervals of these threads,

the time T of transit over the middle thread will be

$$T = M + f \sec\delta \tag{93}$$

If the clock rate is considerable, the reduction of M to T must be corrected accordingly Thus, if

$$\Delta T = \text{the clock rate per hour},$$

the reduction $f \sec\delta$ becomes $f \sec\delta\left(1 - \frac{\Delta T}{3600}\right)$; or, putting

$$\left.\begin{aligned} \rho &= \text{the factor for rate} = 1 - \frac{\Delta T}{3600} \\ T &= M + \rho f \sec\delta \end{aligned}\right\} \tag{94}$$

For a sidereal clock which *gains* 1^s per day, we have $\Delta T = -\frac{1}{24}$, whence $\log\rho = 0.000005$, and for a gain of x seconds daily $\log\rho = 0\ 000005\,x$.

For a mean time clock which has no rate on mean time, and, consequently, loses $9^s\ 83$ per hour on sidereal time, we find $\log\rho = 9\ 99881$, and, if it *gains* x seconds per day, $\log\rho = 9\ 99881 + 0\ 000005\ x$

If the star is very near the pole, each thread should be separately reduced, the reduction to the middle thread being computed by the formula $I = i \sec\delta\ k\rho$, $\log k$ being taken from the table in Art. 131

REDUCTION TO THE MEAN OF THE THREADS

134 Another mode of reducing transits is commonly used in the observatory We may suppose an imaginary thread so placed in the field that the time of transit over it will be the same as the mean of the times on all the threads, and for brevity this imaginary thread is called the *mean of the threads*, or the *mean thread* Then all observations are reduced to this imaginary thread, and the constant c as well as the intervals of the several threads are referred to it, precisely as if it were a real thread It is evident that, where many complete transits are to be reduced, this method saves labor, as the correction $\Delta\iota \sec \delta$ is avoided.

135. EXAMPLE 1 —The upper transit of *Polaris* was observed with the meridian instrument of the Naval Academy on Jan. 26, 1859, as in the second column of the following table

Clamp East $\delta = 88° 33' 54'' 3$

Thread	Sid clock	I	log I	log k	log ι	ι
VII	$0^h 44^m 55^s$	$-23^m 49^s$	n3 15503	0 00079	n1 55290	$-35^s 720$
VI	52 56	-15 48	n2 97681	34	n1 37518	-23 721
V	1 0 54	$-$ 7 50	n2 67210	09	n1 07067	-11 767
IV	8 44					
III	16 32	$+$ 7 48	2 67025	09	1 06882	$+11$ 717
II	24 31	$+15$ 47	2 97635	34	1 37467	$+23$ 696
I	32 30	$+23$ 46	3 15412	78	1 55200	$+35$ 645

The table exhibits the computation of the equatorial intervals of the side threads from the middle thread. The values of log k are taken from the table in Art 131, and each value of log ι is found by the formula log ι = log I + log cos δ — log k. The signs of I and ι are given for *clamp west*

The values of the intervals must be found from a number of observations of this kind, and the mean of all the determinations should be finally adopted.

According to this single observation, the value of $\Delta\iota$ for this instrument will be

$$\Delta\iota = -0^s 021$$

If the reductions are to be made to the mean of the threads, we find the values of I by taking the difference between the

mean of all the observed times and the time on each thread, and compute i as before. The values of i that would result in the above example may be immediately inferred, since they will be equal to those above found diminished by Δi. Thus, arranging the values in their order for clamp west, we have—

Thread	Intervals to middle thread	Intervals to mean thread
I	$+35^s.645$	$+35^s.666$
II	$+23.696$	$+23.717$
III	$+11.717$	$+11.738$
IV	0	$+0.021$
V	-11.767	-11.746
VI	-23.721	-23.700
VII	-35.720	-35.699

EXAMPLE 2.—With the same instrument on the same date, the transit of α *Arietis* was observed as follows (*clamp east*)

Thread	Clock
VII	$1^h\ 58^m\ 58^s.2$
VI	lost
V	1 59 24.1
IV	36.9
III	49.8
II	2 0 2.8
I	15.9
Mean =	1 59 41.28

$\delta = +22^\circ\ 47'\ 49''$.

The algebraic sum of the intervals to the middle thread for the threads here observed, taken from the table in the preceding example, is $+23^s.571$, or for *clamp east* $-23^s.571$, and therefore the time of transit over the middle thread is

$$T = 1^h\ 59^m\ 41^s.28 - \frac{23^s.571}{6} \sec\delta = 1^h\ 59^m\ 37^s.02$$

To reduce this observation to the mean of the threads, the shortest method is to take one-sixth of the interval corresponding to the missing thread—thus:

$$T_0 = 1^h\ 59^m\ 41^s.28 - \frac{23^s.700}{6} \sec\delta = 1^h\ 59^m\ 37^s.00$$

136 Having shown how the quantity T in (82) or (83) is found, I now proceed to show how to determine the constants m, n, and c. Since m and n both involve b, let us begin with the investigation of this quantity.

THE LEVEL CONSTANT

137. The inclination of the rotation axis to the horizon is usually found by applying the spirit level as explained in Art 52, and this inclination expressed in seconds of time is the value of the level constant b, positive when the west end of the axis is too high.

But the spirit level applied to the outer surface of the cylinders which form the pivots does not directly determine the inclination of the rotation axis which is the common axis of these cylinders, unless the pivots are of equal diameters.

To find the *correction for inequality of the pivots*, let C, Fig 38,

Fig 38

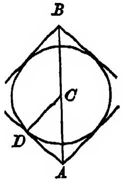

Fig 39

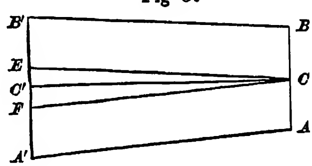

be the centre of a cross section of a pivot, A the vertex of the V in which the pivot rests, B the vertex of the V of the spirit level applied to it. Put

$2i$ = the angle of the V of the level,
$2i_1$ = " " " V " transit inst,
r = the radius of the pivot,
d = the vertical distance of B above C,
d_1 = " " " C " A,

we have

$$d = \frac{r}{\sin i} \qquad d_1 = \frac{r}{\sin i_1}$$

If now, in Fig 39, CC' is the rotation axis, A and B the vertices of the transit and level Vs at the end next the clamp, A' and B' the vertices of the Vs at the other end of the axis,

r' the radius of the pivot at that end, then we have for the distances $B'C'$, $A'C'$,

$$d' = \frac{r'}{\sin i} \qquad\qquad d_1' = \frac{r'}{\sin i_1}$$

The level gives the inclination of the line BB' to the horizon, and we wish to find that of CC' Let us suppose the clamp at first is west, and afterwards east, and that in both positions of the axis the inclination given by the level is observed Let

B, B' = the inclinations given by the level for clamp west and clamp east, respectively,
b, b' = the true inclinations of the rotation axis for clamp west and clamp east,
β = the constant inclination of the line AA'

Also draw CE and CF parallel to BB' and AA', and put

$$p = ECC' \qquad\qquad p_1 = FCC'$$

then, L being the length of the level, we have

$$\sin p = \frac{d' - d}{L} = \frac{r' - r}{L \sin i}$$

$$\sin p_1 = \frac{d_1' - d_1}{L} = \frac{r' - r}{L \sin i_1}$$

for which we may take

$$p = \frac{r' - r}{L \sin i \sin 15''} \qquad\qquad p_1 = \frac{r' - r}{L \sin i_1 \sin 15''}$$

in which p and p_1 are in seconds of time Now, we have evidently for clamp west (b denoting the elevation of the *west* end)

$$b = B + p \qquad\qquad b = \beta - p_1$$

and for clamp east,

$$b' = B' - p \qquad\qquad b' = \beta + p_1$$

whence

$$b' - b = B' - B - 2p = 2p_1$$

$$\frac{B' - B}{2} = p + p_1 = p + p\frac{\sin i}{\sin i_1} = p\left(\frac{\sin i + \sin i_1}{\sin i_1}\right)$$

and, consequently,

$$p = \frac{B' - B}{2}\left(\frac{\sin i_1}{\sin i + \sin i_1}\right) \tag{95}$$

By this formula, when i and i_1 are known, we can directly compute the value of p from the level indications B and B', observed in the two positions of the axis

If the angles of both the transit and the level Vs are equal to each other, which is usually the case, we have $\sin i = \sin i_1$, and then we have

$$p = \frac{B' - B}{4} \tag{96}$$

The value of p thus found is called the correction for inequality of pivots It is to be carefully found by taking the mean of a great number of level determinations in the two positions of the axis By determining it according to the above formula, it is a correction algebraically additive to the level indication for clamp west so that the true level constant in any case is found by the formulæ

$$\left.\begin{aligned} b &= B + p \quad \text{for clamp west,} \\ b' &= B' - p \quad \text{for clamp east} \end{aligned}\right\} \tag{97}$$

138 The inequality of the pivots may also be found without reversing the axis, by using successively two spirit levels, the angles of whose Vs are quite different Let $2i$ and $2i'$ be their angles, and B and B' the apparent inclination of the axis given by the two levels respectively If then b is the true inclination, and we put

$$q = \frac{r' - r}{L \sin 15''}$$

we have, by the preceding article,

$$b = B + \frac{q}{\sin i}$$

$$b = B' + \frac{q}{\sin i'}$$

whence

$$q = (B - B')\ \frac{\sin i \sin i'}{\sin i - \sin i'} \tag{98}$$

and the correction of inclinations found with the level the angle of whose Vs is $2i$ will be

$$p = \frac{q}{\sin i} = (B - B') \frac{\sin i'}{\sin i - \sin i'} \tag{99}$$

If we construct the levels so that their angles are supplements of each other, that is, make $2i' = 180° - 2i$, the formula becomes

$$p = \frac{B - B'}{\tan i - 1}$$

For example, if $2i = 157° \, 23'$ and $2i' = 22° \, 37'$, we have $p = \frac{1}{4}(B - B')$ so that as accurate a determination of p may be found in this way as by reversing and employing the formula (96)

139. Example 1—The following example of a case in which the angle of the level V differed from that of the transit V is given by Sawitsch. A portable instrument was mounted in the meridian, and three sets of observations were made consecutively for the determination of p, as in the following table.

No of determination	Clamp		Level readings West	Level readings East	B and B′	B′ — B
					div	div
1	W	B	13 2	13 1	$B = +0\ 42$	$+4\ 50$
		A	14 0	12 4		
	E	A	18 4	8 4	$B' = +4\ 92$	
		B	17 9	8 2		
2	E	B	18 8	8 3	$B' = +5\ 60$	$+5\ 15$
		A	19 1	7 2		
	W	A	13 6	12 0	$B = +0\ 45$	
		B	13 2	13 0		
3	W	B	13 6	13 0	$B = +0\ 52$	$+4\ 53$
		A	14 0	12 5		
	E	A	18 2	8 3	$B' = +5\ 05$	
		B	18 3	8 0		

The letters A and B in the first column of level readings refer to the position of the level on the axis

The value of one division of the level was 1″ 68, or, in time, $0^s\ 112$

The angle of the level Vs was $85° = 2i$. that of the transit Vs was $91° = 2i_1$.

We find, by taking the mean,

$$B' - B = +4\ 73 \text{ div} = +0^s\ 53$$

and hence, by (95),

$$p = + 0^s.14$$

If we had assumed $i = i_1$, we should have found, by (96), $p = + 0^s.13$, very nearly the same as by the complete formula, although there is a considerable difference between i and i_1.

To find the true inclination of the axis during these observations, we have, by taking the mean of the values of B and B',

$$\begin{aligned} & \quad\ \text{div} \\ B &= + 0.46 = + 0^s.05 \\ B' &= + 5.19 = + 0.58 \end{aligned}$$

whence

$$\begin{aligned} b &= + 0^s.05 + 0^s.14 = + 0^s.19 \\ b' &= + 0.58 - 0.14 = + 0.46 \end{aligned}$$

EXAMPLE 2.—In October, 1852, the pivots of the REPSOLD meridian circle of the U. S. Naval Academy were examined by twenty-four determinations of the inclination of the axis, twelve in each position, and the means were

$$\begin{aligned} & \qquad\qquad\quad \text{div} \\ \text{Clamp west,}\quad B &= + 0.68 \\ \text{“}\quad \text{east,}\quad B' &= + 0.74 \end{aligned}$$

One division of the level was equal to $0^s.079$, and hence

$$p = \overset{\text{div}}{+ 0.015} = + 0^s.0012$$

which was neglected, as of no practical importance. Indeed, it is hardly to be presumed that the level readings were sufficient to determine so small a quantity with certainty; nevertheless they suffice to prove the same excellence of workmanship in these pivots as in those of other instruments of REPSOLD'S. In the meridian circle of Pulkowa, made by the same distinguished artist, STRUVE found an inequality of pivots of only $0^s.0025$.

140. The linear difference of the radii of the pivots may also be found; for, by the above formulæ, we have

$$r' - r = pL \sin i \sin 15'' = \frac{(B' - B)\, L \sin 15'' \sin i \sin i_1}{2 (\sin i + \sin i_1)} \qquad (100)$$

The value of L in the Example 1 of the preceding article was

10.85 inches, and hence $r' - r = 0.000075$ inch Small as this difference appears, it is satisfactorily determined by the level

141 The level constant may also be found by the aid of the mercury collimator (Art 47) and the micrometer For large instruments, it is convenient to have the mercury basin permanently placed immediately under the instrument, a little below the level of the floor, and covered only by a small movable trap-door in the floor

Let CC', Fig 40, be the rotation axis of the instrument, EO the collimation axis, perpendicular to CC', MN the surface of mercury There will be formed in the field of the telescope a reflected image of each thread of the reticule, but we shall here use only the movable micrometer thread (which will be assumed to be parallel to the transit threads) Let this micrometer thread be brought into coincidence with its own reflected image, which occurs when it is at that point a of the field which lies in the line bO drawn through the optical centre of the objective, perpendicular to the horizontal surface of the mercury, and hence it follows that, in this position, the angle aOE is equal to the inclination of the rotation axis CC' to the surface MN, or that aOE is equal to the required level constant Now, let the rotation axis be reversed; the directions CC' and EO remain unchanged (provided the pivots are equal), and the micrometer thread is now at a', at the same distance as before from the collimation axis, if then the thread is again brought into coincidence with its image, it must be moved over a distance $a'a$ = twice the required level constant If then we put

Fig 40

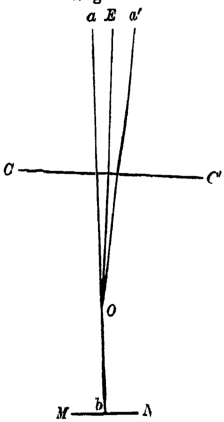

$M =$ the micrometer interval (expressed in seconds of time), positive or negative according as the micrometer thread is east or west of its image after reversal,

we shall have

$$b = \frac{M}{2} \tag{101}$$

and b will thus be positive when the west end is elevated

If the pivots are unequal, b and b' being the true inclinations of the axis for clamp west and clamp east respectively, we shall have, after reversal, $EOa' = b$, and after making a coincidence again, $EOa = b'$, and hence

$$b' + b = M$$

and, from (96) and (97),

$$b' - b = 2p$$

whence

$$b = \frac{M}{2} - p \qquad\qquad b' = \frac{M}{2} + p \tag{102}$$

It appears, then, that the mercury collimator alone is not adequate to the determination of the level constant when the pivots are unequal, since the quantity p must be otherwise determined. The only independent method of finding p is by the spirit level; but we shall see hereafter how the level may be dispensed with (or its indications verified) by means of the mercury collimator *in combination* with collimating telescopes

142. The pivots may be not only unequal, but also of irregular figures To determine the existence of irregularities of form, the level should be read off with the telescope placed successively at every 10° of zenith distance on each side of the zenith The mean of all the inclinations found being called B_0, and B' being that found at a given zenith distance z, $B_0 - B'$ is the correction to be applied to any level reading afterwards taken in the same position of the rotation axis and at the same zenith distance. The level readings are thus freed from the *irregularities* of the pivots, but we still have to apply the correction for *inequality* of the two pivots, and this inequality will be determined by taking one-fourth of the difference of the mean values of B_0 (found as just explained) in the two positions of the rotation axis

For the examination of the form of the pivots of the great Transit Circle of Greenwich, "each is perforated, and within the hollow of the eastern pivot is fixed a plate of metal perforated with a very small hole, behind which a light can be placed for illumination, and in the hollow of the western pivot there is fixed an object glass at a distance from the perforated plate equal to its focal length This combination forms a collimator revolving with the instrument. It is viewed by a telescope of 7 feet focal length, which, when required, is placed on Vs, one of

them planted in the opening of the western pier, and the other in a hole made for that purpose in the western wall of the room By a series of most careful observations in 1850, '51, and '52, no appreciable error could be discovered in the form of the pivots."* These pivots are six inches in diameter.

THE COLLIMATION CONSTANT.

143 The constant c may express the distance from the collimation axis either of the middle thread or of the fictitious thread denoted by the "mean of the threads;" the former, when T in (82) is the time of transit over the middle thread, and the latter when T is the time of transit over the mean of the threads

Let us first determine c for the middle thread, its value for the mean of the threads can afterwards be found by adding the quantity Δi (Art. 133), thus, denoting the latter by c_0, we shall have

$$c_0 = c + \Delta i \tag{103}$$

144 *First Method*—Place the telescope in a horizontal position, and select any terrestrial object that presents some well defined point, and so remote that the stellar focus of the telescope need not be changed to obtain a good definition of the point † Measure with the micrometer the distance of the point from the middle thread Reverse the rotation axis, and again measure this distance If it is the same as before, the thread is in the collimation axis, and $c = 0$, otherwise c is one-half the difference of the micrometer measures. To obtain a simple practical rule which will fix the sign of c for clamp west, put

M, M' = the micrometer distances of the middle thread from the point, positive when the thread appears in the field to be nearer to the clamp than the point,

then, for clamp west,

$$c = \tfrac{1}{2}(M + M') \tag{104}$$

This gives c with the positive sign when the thread is nearer to the clamp than the collimation axis, in which case stars a

---

* Greenwich Obs for 1852 Introd p iv

† The meridian mark, if one has been established, will, of course, be used for this point See Art 159.

their upper culminations arrive at the thread before they reach the axis, and the correction $c \sec \delta$ must be additive

By this method, no correction for the inequality of the pivots is required, since the telescope is horizontal.

Instead of a distant terrestrial point, we may substitute the intersection of two threads in the focus of a horizontal collimating telescope, placed north or south of the instrument To avoid reversing the axis, two such collimators are used, as in the following method

145. *Second Method.*—Let two horizontal collimating telescopes D and F, Fig 41, be mounted on piers in the transit room, one

Fig. 41

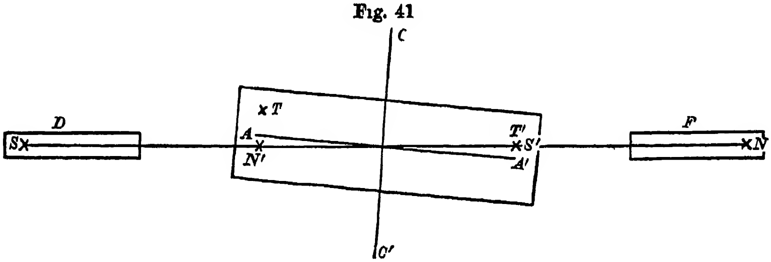

north and the other south of the transit instrument, in the same plane with its rotation axis, their objectives turned towards this axis, and, consequently, towards each other Suppose, for simplicity, that the collimators have each a single vertical thread N or S in the principal focus The transit instrument being at first removed so as not to obstruct the view of one collimator from the other, an image of the thread of either collimator will be formed at the focus of the other, and either thread may be adjusted so as to coincide exactly with the image of the other

Then the two sight lines of the collimators are in the same line, or at least are parallel to each other, and their threads when viewed by the transit telescope represent two infinitely distant objects whose difference of azimuth is precisely 180°. Replacing the transit instrument, direct it first towards the north collimator. Let CC' be its rotation axis, AA' perpendicular to CC' its collimation axis, T the middle thread of the diaphragm at the distance $AT = c$ west of the axis An image of N will be formed at N' at a distance AN' from the collimation axis, which is the measure of the *difference of directions* of

the common sight line of the collimators and the axis AA'. Measure with the transit micrometer the distance ($= M$) of T from N' Next revolve the telescope upon its rotation axis and direct it towards the south collimator. The axis CC' is unchanged, and the point A of the focus which represents the collimation axis is now found at A' The image of S is formed at S' at a distance $A'S'$ from the collimation axis, which is again the measure of the difference of directions of the common sight line of the collimators and the axis AA' so that we have $AN' = A'S'$, but the points S' and N' are on opposite sides of the axis The middle transit thread is now at T' on the same side of the collimation axis and at the same distance from it as before so that we have also $A'T' = c$. Hence, remembering that

M, M' = the micrometer distances of the middle thread *west* of the north and south collimator threads, respectively,

we evidently have

$$c = \tfrac{1}{2}(M + M')$$

To give this method the greatest degree of precision, it will not suffice to use single vertical threads in the collimators, on account of the difficulty of estimating the coincidence of two superposed threads It is also clear that the sight lines of the two collimators must not be marked by two entirely similar and equal systems of threads, since to bring the sight lines into coincidence we should still have to superpose one system upon the other A simple method is to substitute for the single thread in the north collimator two very close parallel vertical threads, and in the south collimator two threads intersecting at an acute angle and making equal angles with the vertical Then the middle point between the close parallel threads marks the sight line of the north collimator, and the coincidence of the intersection of the cross threads of the south collimator with this point can be judged of by the eye with great delicacy It will assist the eye somewhat if the collimators have also two parallel horizontal threads equidistant from the middle of the field, but not at the same distance from each other in both telescopes

In the large transit-circle of the Greenwich Observatory the whole system of transit threads is moved by the micrometer screw In this case let M and M' be the micrometer *readings*

when the middle thread is in coincidence with the two collimators respectively; then $M_0 = \frac{1}{2}(M + M')$ is the reading when the middle thread is in the axis of collimation, and $c = 0$, and if during any subsequent observations the micrometer is placed at a different reading m, we must take for the reduction of such observations $c = M_0 - m$

EXAMPLE.—On Feb 7, 1853, the collimators of the Greenwich transit-circle having been brought into coincidence, the middle transit thread was brought successively upon each collimator, and the reading of the micrometer for the north collimator was 31^r 300, and for the south collimator 31^r 521. Hence, the micrometer being set at the mean 31^r 411, the middle thread would be in the collimation axis, and then $c = 0$ But if the transit of a star was observed on that date with the micrometer set at 31^r 5, we should have $c = 31^r\,411 - 31^r\,5 = -0^r\,089$, or, since $1^r = 0^s\,985$, $c = -0^s.088$

146. For merely determining the collimation constant, it is not necessary, as has been above supposed, that the collimators be in the same horizontal plane with the axis of the transit instrument. They may be in a plane so far above (or below) that of the transit instrument that the telescope of the latter when horizontal will not intercept the view from one to the other If then each collimator is mounted as a transit instrument and its rotation axis is level, it can be depressed (or elevated) until its threads can be viewed by the transit telescope. If the inclination of each collimator to the horizon is the same, and the measures of the distances of the middle transit threads from the two collimating threads are as before M and M', we still have $c = \frac{1}{2}(M + M')$ The objection to this arrangement is that the sight lines of the collimators must be made perpendicular to their rotation axes, and these axes must be levelled, adjustments which are unnecessary when they are in the same or very nearly the same horizontal plane as the axis of the principal instrument

To avoid the necessity of raising the transit instrument out of the Vs (when the three instruments are in the same horizontal plane), two apertures may be made in the cube of the telescope, through which, when the telescope is vertical, the horizontal rays from the collimators may pass

147 *Third Method*.—Direct the instrument vertically towards the mercury collimator, and measure with the micrometer the distance of the middle thread from its image; put

M = the micrometer distance of the thread from its image, *positive* when the thread is *west* of its image;

then it is evident that, if the rotation axis is horizontal, we shall have $M = 2c$; but, if the west end is elevated by the quantity b, the apparent distance of the thread and its image will be diminished by $2b$: so that we shall then have $M = 2c - 2b$, whence

$$c = \tfrac{1}{2} M + b \tag{105}$$

which gives c with its proper sign for the actual position of the rotation axis.

If we wish to determine the level constant at the same time, we reverse the axis, and again measure the distance of the middle thread from its image. Then, putting

M, M' = the distances of the thread west of its image for clamp west and clamp east, respectively,
b, b' = the level constants in the two positions,

we have, for clamp west,

$$c = \tfrac{1}{2} M + b$$

and (since the sign of c is changed by the reversal), for clamp east,

$$-c = \tfrac{1}{2} M' + b'$$

whence

$$c = \tfrac{1}{4}(M - M') - \tfrac{1}{2}(b' - b)$$

or, since $b' - b = 2p$,

$$\left.\begin{aligned} c &= \tfrac{1}{4}(M - M') - p \quad \text{clamp west,} \\ c &= -\tfrac{1}{4}(M - M') + p \quad \text{" east,} \end{aligned}\right\} \tag{106}$$

and

We have also

$$\begin{aligned} b' + b &= -\tfrac{1}{2}(M + M') \\ b' - b &= 2p \end{aligned}$$

whence

$$\left.\begin{aligned} b &= -\tfrac{1}{4}(M + M') - p \quad \text{clamp west,} \\ b' &= -\tfrac{1}{4}(M + M') + p \quad \text{" east,} \end{aligned}\right\} \tag{107}$$

When the micrometer thread is at right angles to the meridian, and, consequently, moves only in declination, it can nevertheless

be used for determining the small quantities c and b according to the above method, as follows Let AB, Fig 42, be the middle transit thread, $A'B'$ its reflected image in the collimator, CD the micrometer thread. Move the micrometer thread CD until the distance between it and its image $C'D'$, estimated by the eye, is equal to the distance between the transit thread AB and its image, that is, until the two threads and their images form, to the eye, a perfect square This square is always very small in a tolerably well adjusted instrument, and can be very accurately formed by estimation We have then only to measure the distance of CD and $C'D'$ to obtain the required distance Now, if we move CD we also cause the image $C'D'$ to move; but it is evident that (the telescope not being disturbed) if CD is moved to $C'D'$, the image will be seen at CD, and, in passing from one position to the other, the thread and its image will be in coincidence at the point midway between the two positions If this coincidence could be observed with perfect accuracy, we might read the micrometer head first when the square was formed, and secondly when the coincidence occurred and the difference of the readings would be one-half the required measure of the side of the square But, as the threads have sensible thickness, it is difficult to estimate the coincidence of the middle of the thread with the middle of its image, and therefore it will be better to read the micrometer, first when the square is formed by the thread at CD and its image at $C'D'$, and secondly when the square is again formed by the thread at $C'D'$ and its image at CD The difference of the readings will then be the required measure of the side of the square or of the quantity above denoted by M

Fig 42

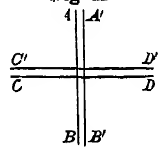

Example 1—In 1857, June 28, at the Naval Academy, to find the collimation constant of the meridian circle, the distance of the image of the middle thread from its image in the mercury collimator was measured, by forming a square, as above explained, with the declination micrometer thread, alternately north and south of its own image. The readings of the micrometer were 53.5 div and 59 5 div The middle thread was west of its image. The value of one division of the micrometer was 0^s 0618 The level constant found by the spirit level was $b = -0^s\ 247$ Clamp West.

We find

$$\begin{aligned} M &= +\overset{\text{div}}{6\ 0} = +\ 0^{s}\!\cdot 371 \\ c &= \tfrac{1}{2} M + b = +\ 0^{s}\!\cdot 186 - 0^{s}\!\cdot 247 = -\ 0^{s}\!\cdot 061 \end{aligned}$$

EXAMPLE 2.—In 1855, May 11, with the same instrument, a similar observation was made, both with clamp west and clamp east, and there were found

$$\begin{array}{lll} \text{Clamp W.,} & M = -\overset{\text{div}}{5\ 4} & \text{(Thread east of its image)} \\ \text{"}\quad \text{E.,} & M' = -\ 2\ 7 & \text{" " " "} \end{array}$$

Hence, since for this instrument $p = 0$, we find

$$\begin{aligned} c &= \tfrac{1}{4}(M - M') = -\ 0^{s}\!\cdot 042 \text{ for clamp W.,} \\ b &= -\tfrac{1}{4}(M + M') = +\ 0^{s}\!\cdot 125 \end{aligned}$$

148. By combining the collimating telescopes with the mercury collimator, we can deduce both the collimation and level constants without reversing the rotation axis and without involving the inequality of the pivots. For, by the collimating telescopes, we deduce the value of c, and by the mercury collimator in the same position of the axis, the value of $b = c - \frac{1}{2} M$. This is the method now employed at the Greenwich Observatory, where the transit circle is never reversed; but it is better also to reverse, and thus obtain two independent determinations of our constants for verification.

If we reverse the instrument and determine the level constant by this method in both positions, we can find the inequality of the pivots; for we shall have $p = \frac{1}{2}(b' - b)$.

149. *Fourth Method.*—The preceding methods are very precise and convenient, but are practicable only with instruments provided with collimators. The following method is independent of these auxiliaries, and is practicable with all instruments which admit of reversal; and, being quite accurate, it may be used also with the larger instruments in connection with the other methods, as a check upon them.

Direct the telescope upon a star near the pole, and observe its transits over one or more of the side threads (and also over the middle thread, if the instrument can be reversed in the interval between two threads). Then immediately reverse the rotation axis and observe the transits of the star over one or

more of the same side threads again Let T and T' be the mean of the clock times of transit over the middle thread, deduced from the several observations for clamp west and clamp east respectively (Art 133), b and b' the level constants in the two positions (the pivots being supposed unequal), then, by (82), (83), and (87), we have, for clamp west,

$$\alpha = T + \Delta T + a\,\frac{\sin(\varphi - \delta)}{\cos\delta} + b\,\frac{\cos(\varphi - \delta)}{\cos\delta} + \frac{c}{\cos\delta} - \frac{0^s{.}021\cos\varphi}{\cos\delta}$$

and, for clamp east,

$$\alpha = T' + \Delta T + a\,\frac{\sin(\varphi - \delta)}{\cos\delta} + b'\,\frac{\cos(\varphi - \delta)}{\cos\delta} - \frac{c}{\cos\delta} - \frac{0^s{.}021\cos\varphi}{\cos\delta}$$

From the difference of these equations we deduce

$$c = \tfrac{1}{2}(T' - T)\cos\delta + p\cos(\varphi - \delta) \qquad (108)$$

in which we have substituted p for $\frac{1}{2}(b' - b)$ If the pivots are equal, the term $p\cos(\varphi - \delta)$ will disappear

If T and T' are the times of passing the *mean thread* (Art 134), then c is the collimation of this fictitious thread

150. If the equatorial intervals have not been previously well determined, the mean of the transits over the same thread in the two positions must be compared with the transit over the middle thread Thus, if T_1 and T_1' are the clock times on the same thread for clamp west and clamp east, we have, for this thread, i_1 being its equatorial interval (omitting the diurnal aberration, which would be eliminated),

$$\alpha = T_1 + i_1\sec\delta + \Delta T + a\,\frac{\sin(\varphi - \delta)}{\cos\delta} + b\,\frac{\cos(\varphi - \delta)}{\cos\delta} + \frac{c}{\cos\delta}$$

$$\alpha = T_1' - i_1\sec\delta + \Delta T + a\,\frac{\sin(\varphi - \delta)}{\cos\delta} + b'\,\frac{\cos(\varphi - \delta)}{\cos\delta} - \frac{c}{\cos\delta}$$

and, for the middle thread, supposed to be observed with clamp west,

$$\alpha = T + \Delta T + a\,\frac{\sin(\varphi - \delta)}{\cos\delta} + b\,\frac{\cos(\varphi - \delta)}{\cos\delta} + \frac{c}{\cos\delta}$$

The difference between the last equation and the mean of the first two gives

$$c = \left(\frac{T_1 + T_1'}{2} - T\right)\cos\delta + p\cos(\varphi - \delta) \qquad (109)$$

but, since the error of observation in T will appear in all the values of c thus found from the several threads, their mean will also involve this error, so that but a slight increase of accuracy will be gained by observing more than one side thread. Hence, for the greatest precision, it is indispensable that the thread intervals should be previously well determined, and that several threads should be used as prescribed in the preceding article.

These formulæ apply without modification to the case of a lower transit, if for δ we use the supplement of the star's declination (Art. 128).

EXAMPLE.—On Sept. 30, 1858, the lower transit of *Polaris* was observed with the meridian circle of the Naval Academy on the three side threads and the middle thread with clamp east, and on the same side threads with clamp west, as below.

Polaris (lower culm.) $\delta = 91° 26' 34''$.

	Thread	Clock	Reduction to middle thread	Clock time on middle thread
Cl. E.	I	$12^h\ 44^m\ 45^s$	$+ 23^m\ 39^s.2$	$13^h\ 8^m\ 24^s.2$
	II	12 52 41	+ 15 44.8	25.8
	III	13 0 39	+ 7 47.5	26.5
	IV	13 8 24.5		24.5
			Mean T' =	13 8 25.25
Cl. W.	III	13 16 21	− 7 47.5	13 8 33.5
	II	24 20	− 15 44.8	35.2
	I	32 13	− 23 39.2	33.8
			Mean T =	13 8 33.17

The adopted intervals for these threads were $i_1 = + 35^s.67$, $i_2 = + 23^s.77$, $i_3 = + 11^s.77$, with which the reductions to the middle thread were computed as in the table. As a test of the accuracy of the observation, each thread is here reduced separately. We have then, taking only the seconds of T and T', and putting $p = 0$, by (108),

$$c = \frac{25^s.25 - 33^s.17}{2} \cos 91° 26' 34'' = + 0^s.100 \text{ (Cl. W.)}$$

On the same day the distance of the middle thread west of its

image in the mercury collimator was found with clamp east to be -19.9 div $=-1^s.230$, and by the spirit level there was found $b=+0^s.521$, whence $c=-0^s.615+0^s.521=-0^s.094$ (Cl. E.), agreeing almost exactly with the value found by *Polaris*.

THE AZIMUTH CONSTANT

151. To find the azimuth constant, we must have recourse to the observations of stars, since it is only by a reference to the heavens that the direction of the meridian can be determined. We can either find a directly, or first find n and m, from which a can be deduced.

To find a *directly.*—Observe the transits of two stars of different declinations δ and δ'. Let T and T' be the clock times of transit reduced to the middle thread (or the mean thread), b the level constant, c the collimation constant for the middle thread (or the mean thread), and put $c'=c-0^s.021\cos\varphi$ (Art. 126). Let ΔT_0 be the clock correction at any assumed time T_0, δT the hourly rate; then the clock corrections at the times of observation are

$$\Delta T=\Delta T_0+\delta T(T-T_0)$$
$$\Delta T'=\Delta T_0+\delta T(T'-T_0)$$

Then, if α and α' are the apparent right ascensions of the stars at the time of the observation, as found from the Ephemeris, we have, by (82) and (87),

$$\alpha=T+\Delta T+a\sin(\varphi-\delta)\sec\delta+b\cos(\varphi-\delta)\sec\delta+c'\sec\delta$$
$$\alpha'=T'+\Delta T'+a\sin(\varphi-\delta')\sec\delta'+b\cos(\varphi-\delta')\sec\delta'+c'\sec\delta'$$

If in these we substitute the above values of ΔT and $\Delta T'$, and suppose the *rate* of the clock to be given, every thing in the equations will be known except ΔT_0 and a. To abbreviate, put

$$\left.\begin{aligned} t&=T+\delta T(T-T_0)+b\cos(\varphi-\delta)\sec\delta+c'\sec\delta \\ t'&=T'+\delta T(T'-T_0)+b\cos(\varphi-\delta')\sec\delta'+c'\sec\delta' \end{aligned}\right\} \qquad (110)$$

that is, let t and t' denote the observed clock times reduced to the assumed epoch T_0 and corrected for level and collimation; then we have

$$\alpha=t+\Delta T_0+a\sin(\varphi-\delta)\sec\delta$$
$$\alpha'=t'+\Delta T_0+a\sin(\varphi-\delta')\sec\delta'$$

which give

$$\alpha' - \alpha = t' - t + a\left[\frac{\sin(\varphi - \delta')}{\cos \delta'} - \frac{\sin(\varphi - \delta)}{\cos \delta}\right]$$

$$= t' - t + a\,\frac{\cos \varphi \sin(\delta - \delta')}{\cos \delta \cos \delta'}$$

whence

$$a = [(\alpha' - \alpha) - (t' - t)]\,\frac{\cos \delta \cos \delta'}{\cos \varphi \sin(\delta - \delta')}$$

or

$$a = \frac{(\alpha' - \alpha) - (t' - t)}{\cos \varphi\,(\tan \delta - \tan \delta')} \qquad (111)$$

From these formulæ we learn the conditions necessary for the accurate determination of a In the first place, if the rate of the clock is not well determined, the interval between the observations must be as brief as possible, so that t and t' will be but little affected by the error in δT The right ascensions of the two stars must therefore differ as little as possible, or, if one of them is observed at its lower culmination, they must differ by nearly 12^h In the next place, it is evident that the larger the factor $\tan \delta - \tan \delta'$ in the denominator of (111), the less effect will errors in t' and t have upon the deduced value of a Therefore, if both stars are observed at the upper culminations, one must be as near to the pole and the other as far from it as possible Finally, the right ascensions α and α' must be accurately known, and, therefore, only fundamental stars should be used, or those whose places are annually given in the Ephemeris

If one of the stars is observed at its lower culmination, we have only to use $180° - \delta'$ and $12^h + \alpha'$ for its declination and right ascension, and still use the equations (110) and (111) without change of notation (Art 128) In this case the factor $\tan \delta - \tan \delta'$ will become $\tan \delta + \tan \delta'$ (taking δ' here to signify the proper declination), and this will be the greater, the nearer *both* stars are to the pole All the most favorable conditions can therefore be best fulfilled by two circumpolar stars, both as near to the pole as possible and differing in right ascension by nearly 12^h

If we can rely upon the stability of the instrument and the clock rate for 12^h, we may observe the same star at both its upper and lower culminations, and then, putting $180° - \delta' = \delta$, the formula becomes

$$a = \frac{\alpha' - \alpha - (t' - t)}{2 \cos \varphi \tan \delta} \tag{112}$$

where α' is the apparent right ascension of the star at the lower culmination increased by 12^h, and t' is the corrected time for the lower culmination.

If the object of the observer is to re-determine the right ascensions of the fundamental stars themselves, it is plain that he must have an instrument of the greatest stability, and for the determination of the azimuth must rely upon upper and lower culminations of the same star; for the difference $\alpha' - \alpha$ in (112) may be accurately computed by the formulæ for precession and nutation, although the absolute values of α and α' may be but approximately known

To find n *directly* —Having observed two stars under the conditions above given, let t and t' be the clock times reduced for rate to the assumed epoch T_0 as before, but further corrected only for collimation, that is, put

$$\left.\begin{aligned} t &= T + \delta T\,(T - T_0) + c' \sec \delta \\ t' &= T' + \delta T\,(T' - T_0) + c' \sec \delta' \end{aligned}\right\} \tag{113}$$

then, by Bessel's formula, Art 126,

$$\begin{aligned} \alpha &= t + \Delta T_0 + m + n \tan \delta \\ \alpha' &= t' + \Delta T_0 + m + n \tan \delta' \end{aligned}$$

whence

$$n = \frac{(t' - t) - (\alpha' - \alpha)}{\tan \delta - \tan \delta'} \tag{114}$$

For a single circumpolar star observed at its upper and lower culminations,

$$n = \frac{(t' - t) - (\alpha' - \alpha)}{2 \tan \delta} \tag{115}$$

We then find m by (85), namely,

$$m = b \sec \varphi - n \tan \varphi \tag{116}$$

If we reduce our observations by Bessel's or Hansen's formula, it will be unnecessary to find a If it is required, however, it may now be found by the equation

$$a = b \tan \varphi - n \sec \varphi \tag{117}$$

EXAMPLE.—On May 25, 1854, with the meridian circle of the U. S. Naval Academy, the upper and lower transits of *Polaris* and the transit of *α Arietis* were observed, and the clock times reduced to the middle thread were as follows:

	T	
Polaris U. C.	$1^h\ 14^m\ 48^s.24$	(Clamp East.)
α Arietis	2 8 9.13	"
Polaris L. C.	13 14 40.12	"

With the spirit level and mercury collimator, there were found $b = +0^s.004$, $c = -0^s.203$. The hourly rate of the clock on sidereal time was $\delta T = -0^s.224$. The longitude of the instrument was $5^h\ 5^m\ 55^s$ W. of Greenwich, and the latitude $\varphi = 38°\ 58'\ 52''.5$. Find the constants a, m, and n.

From the Nautical Almanac for this date the right ascensions and declinations of the stars, reduced to the time of the observations, are

	α	δ	Nat. tan δ
Polaris U. C.	$1^h\ 5^m\ 29^s.41$	$88°\ 31'\ 39''$	38.902
α Arietis	1 58 56.05	22 46 7	0.420
Polaris L. C.	13 5 29.75	91 28 21	— 38.902

We find for the constant of diurnal aberration for the given latitude, $0^s.021 \cos\varphi = 0^s.016$, and hence $c' = -0^s.203 - 0^s.016 = -0^s.219$. Computing $c' \sec\delta$, $b \cos(\varphi - \delta) \sec\delta$ for each star, and reducing the times for rate to 0^h, the values of t, according to (110), are found as follows:

	T	Red. for rate to 0^h	Corr. for collim.	Corr. for level.	t
Polaris U. C.	$1^h\ 14^m\ 48^s.24$	$-0^s.28$	$-8^s.52$	$+0^s.10$	$1^h\ 14^m\ 39^s.54$
α Arietis,	2 8 9.13	— 0.48	— 0.24	0.00	2 8 8.41
Polaris L. C.	13 14 40.12	— 2.97	+ 8.52	— 0.09	13 14 45.58

To exemplify the use of the formula (111), we will first take *Polaris* U. C., and *α Arietis* (accenting the quantities for the second star). We find

$$\alpha' - \alpha = 53^m\ 26^s.64 \qquad t' - t = 53^m\ 28^s.87$$
$$\tan\delta - \tan\delta' = 38.482$$

and hence, by (111),

$$a = \frac{-2^s.23}{38.482 \cos\varphi} = -0^s.075$$

To exemplify the use of (111) in the case of two stars, one above and the other below the pole, we will take *α Arietis* and *Polaris* L C, for which we find

$$\alpha' - \alpha = 11^h\, 6^m\, 33^s.70 \qquad t' - t = 11^h\, 6^m\, 37^s.17$$
$$\tan\delta - \tan\delta' = 39.322$$

whence

$$a = \frac{-3^s.47}{39.322 \cos\varphi} = -0^s.114$$

To exemplify the use of (112), we will take *Polaris* U C. and L C, for which we have

$$\alpha' - \alpha = 12^h\, 0^m\, 0^s.34 \qquad t' - t = 12^h\, 0^m\, 6^s.04$$
$$2\tan\delta = 77.80$$

whence

$$a = \frac{-5^s.70}{77.80 \cos\varphi} = -0^s.094$$

We adopt this last determination of a, and then, by (80), we find

$$m = -0^s.056 \qquad n = +0^s.076$$

But, where m and n are required, it is preferable to find n directly from the observations, and for this purpose we do not correct the times for level Thus, correcting the times according to (113), we find t as follows

	T	Red for rate to 0^h	Corr for coll	t
Polaris U C	$1^h\, 14^m\, 48^s.24$	$-0^s.28$	$-8^s.52$	$1^h\, 14^m\, 39^s.44$
α Arietis,	2 8 9 13	−0 48	−0 24	2 8 8 41
Polaris L C	13 14 40.12	−2 97	+8 52	13 14 45 67

Taking *Polaris* U C and *α Arietis*, we find, by (114),

$$n = \frac{+2^s.33}{38.482} = +0^s.061$$

Taking *α Arietis* and *Polaris* L C, we find, by the same formula,

$$n = \frac{+3^s.56}{39.322} = +0^s.091$$

Finally, from *Polaris* U C. and L C., we find, by (115),

$$n = \frac{+5^{s}.89}{77.804} = +0^{s}.076$$

agreeing exactly with the value above found from the same observations We now find m by (116), which gives as before $m = -0^{s}.056$ And then, if a is required, we find, by (117), $a = -0^{s}.094$

THE CLOCK CORRECTION

152 Having determined all the instrumental constants, the clock correction is found from the transit of any known star by the formula

$$\Delta T = \alpha - (T + \tau)$$

in which T is the clock time of the star's transit over the middle thread, or the mean thread, and τ is the reduction of this thread to the meridian, computed by either (81), (86), or (87)

The finally adopted value of ΔT will be the mean of all the values thus found from a number of stars, and this mean will be the value corresponding to the mean of all the times of observation But the observations thus grouped together for a determination of ΔT should not extend over so great a period of time that the clock rate cannot be regarded as constant during that period

The clock rate is found by comparing the corrections ΔT, $\Delta T'$, corresponding to two times T, T', or

$$\delta T = \frac{\Delta T' - \Delta T}{T' - T}$$

The value ΔT_0 of the clock correction for an assumed epoch T_0 will be found by taking

$$\Delta T_0 = \Delta T + \delta T (T_0 - T)$$

It is evident, from HANSEN's formula (86), that an error in the determination of n (or of a, which involves n) will have the less effect upon τ and ΔT the less the difference between the observer's latitude and the star's declination Hence, assuming that b and c can be found with greater precision than n, it is expedient to use for *clock stars* only fundamental stars which pass near to the zenith If two circumzenith stars are observed, such that the mean of the tangents of their declinations is equal to the tangent

of the latitude, the mean value of ΔT will be wholly free from any error in n

An error in c will be eliminated, either wholly or in part, by taking the mean of the two values of ΔT found in the two positions of the rotation axis, since the sign of c, and, consequently, also that of any error in c, is changed by reversing the axis An error in the assumed value of the correction p, for inequality of pivots, will also be removed in this manner; but, since the coefficient of b does not change its sign for different stars, nor when the instrument is reversed, there is no method of eliminating an unknown error of b It is necessary, therefore, that the astronomer give particular attention to the precise determination of this constant

(For the determination of the clock correction by a transit of the sun, see Art 155)

DETERMINATION OF THE RIGHT ASCENSIONS OF STARS

153 The principal application of the transit instrument in the observatory is the determination of the apparent right ascensions of the celestial bodies The instrumental constants and the clock correction and rate being found from known stars as above explained, the right ascension of any other star is immediately deduced from the time of its transit by (82), in which we may substitute (86) or (87). The form in which the observations are reduced will be best learned by referring to any of the printed observations of the principal observatories.

In making a catalogue of stars, the instrument is clamped at a certain declination, and all the stars within a zone of the breadth of the field of the telescope are observed as they cross the threads In this case, it will be expedient to find the clock correction from fundamental stars nearly in the parallel of declination upon which the instrument is set For if we have found ΔT from a star whose right ascension is α, by the formula

$$\Delta T = \alpha - (T + \tau)$$

the right ascension of another star will be

$$\begin{aligned} \alpha' &= T' + \Delta T + \delta T(T' - T) + \tau' \\ &= \alpha \quad + (T' - T)(1 + \delta T) + (\tau' - \tau) \end{aligned}$$

that is, it will be equal to the right ascension of the fundamental

star increased by the clock interval corrected for rate, and for the difference $\tau' - \tau$ of the instrumental corrections, and if the declinations are the same, we shall have $\tau' - \tau = 0$, and all the errors of the instrument will be eliminated Since, in this application, the absolute clock correction is not required, we may substitute in (82) m' for $\Delta T + m$, and m' will be found directly from the fundamental stars by the formula

$$m' = \alpha - (T + n \tan \delta + c' \sec \delta)$$

The right ascensions will then be obtained by adding to the observed times the correction $m' + n \tan \delta + c' \sec \delta$, and it will not be necessary to separate m' into its constituents ΔT and m Since m' involves the rate of the clock, its hourly variation will be taken into account in precisely the same manner as that of ΔT This mode of reduction was adopted by BESSEL for his Konigsberg Zone observations

The mean right ascensions for the beginning of the year or for any assumed epoch, are found, from the apparent right ascensions, by the formula (692) of Vol I

For the determination of the absolute right ascensions of the fundamental stars, see Chapter XII Vol I

TRANSITS OF THE MOON, THE SUN, AND THE PLANETS.

154 *Transits of the moon* —The hour angle of the moon's limb, when on a side thread, is affected by parallax, and the time required by the moon to pass from this thread to the meridian differs from that required by a star in consequence of the moon's proper motion in right ascension If δ is the true declination of the moon, δ' the apparent declination as affected by parallax, ϑ' the apparent east hour angle of the moon's limb at the instant of the observed transit over a thread whose equatorial interval from the middle thread is i, then, since δ' is the declination of the observed point on the thread, we have

Fig. 43

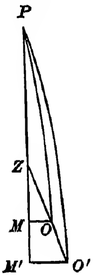

$$\vartheta' = m + n \tan \delta' + (i + c') \sec \delta'$$

Thus ϑ' is known, but to reduce the observation we must find the true hour angle ϑ Let PM, Fig 43, be the meridian, P the pole, Z the geocentric zenith of the place of observation, O the true place of the moon, O' its apparent place, and denote the true and apparent

zenith distances ZO and ZO' by z and z' We have $MPO = \vartheta$, $MPO' = \vartheta'$, and drawing OM, $O'M'$ perpendicular to the meridian, we find

$$\sin MZO = \frac{\sin MO}{\sin ZO} = \frac{\sin MO'}{\sin ZO'}$$

or

$$\frac{\sin \vartheta \cos \delta}{\sin z} = \frac{\sin \vartheta' \cos \delta'}{\sin z'}$$

whence

$$\vartheta = \vartheta' \frac{\sin z \cos \delta'}{\sin z' \cos \delta}$$

Now, if

$\lambda =$ the moon's increase of right ascension in one second of sidereal time,

the sidereal time required by the moon to describe the hour angle ϑ is $\frac{\vartheta}{1-\lambda}$, and, therefore, T being the clock time of transit of the limb over the thread, the right ascension of the limb at the instant of its transit over the meridian will be

$$\alpha = T + \Delta T + \frac{\vartheta}{1-\lambda}$$

and if we put

$S =$ the moon's geocentric apparent semidiameter,

the hour angle of the moon's centre when the limb is on the meridian will be $\pm \frac{S}{15 \cos \delta}$, and the time required by the moon to describe this hour angle will be $\pm \frac{S}{15(1-\lambda)\cos\delta}$ Hence the formula for computing the right ascension of the centre at the instant of the transit of the centre over the meridian is

$$\alpha = T + \Delta T + \frac{\vartheta}{1-\lambda} \pm \frac{S}{15(1-\lambda)\cos\delta}$$

in which the upper or the lower sign will be used according as the first or the second limb is observed If then we substitute the values of ϑ and ϑ', and put

$$F = \frac{\sin z}{\sin z'} \frac{1}{(1-\lambda)\cos\delta} \tag{118}$$

we have

$$\alpha = T + \Delta T + iF + (m + n \tan \delta' + c' \sec \delta') F \cos \delta' \pm \frac{S}{15(1-\lambda)\cos\delta} \quad (119)$$

To compute the factor F conveniently, put

$$A = \frac{\sin z}{\sin z'} \qquad B = \frac{1}{1-\lambda}$$

then

$$F = AB \sec \delta$$

The value of A may be developed in a simple form. If we put φ' = the reduced or geocentric latitude of the place of observation, ρ = its geocentric distance, π = the moon's equatorial horizontal parallax, we have $z = \varphi' - \delta$, and

$$\sin(z' - z) = \rho \sin \pi \sin z'$$

whence

$$A = \frac{\sin z}{\sin z'} = \cos(z' - z) - \rho \sin \pi \cos z'$$

or, neglecting the square of the parallax,

$$A = 1 - \rho \sin \pi \cos(\varphi' - \delta)$$

which is the form employed by BESSEL, who gives the value of log A, in Table XIII of the *Tabulæ Regiomontanæ*, with the argument log $[\rho \sin \pi \cos(\varphi' - \delta)]$ For a particular observatory, where these reductions are frequent, it is more convenient to prepare a special table, adapted to the latitude, giving log A with the arguments δ and π In BESSEL's table, there are also given the values of log B with the argument "change of the moon's right ascension in 12^h of mean time," and the argument is expressed in degrees and minutes of arc, but as the change in one minute, expressed in seconds of time, which I shall denote by $\Delta\alpha$, is given in the American Ephemeris, I shall take

$$\lambda = \frac{\Delta\alpha}{60\,1643} \qquad B = \frac{60\,1643}{60\,1643 - \Delta\alpha}$$

where 60 1643 is the number of sidereal seconds in one minute of mean time The following table gives the values of log B computed by this formula

Argument $\Delta\alpha$ = change of the moon's right ascension in one minute of mean time

$\Delta\alpha$	log B	$\Delta\alpha$	log B	$\Delta\alpha$	log B
1^s 65	0 01208	2^s 05	0 01506	2^s 45	0 01806
1 70	0 01245	2 10	0 01543	2 50	0 01843
1 75	0 01282	2 15	0 01580	2 55	0 01881
1 80	0 01319	2 20	0 01618	2 60	0 01919
1 85	0 01356	2 25	0 01655	2 65	0 01956
1 90	0 01394	2 30	0 01693	2 70	0 01994
1 95	0 01431	2 35	0 01730	2 75	0 02032
2 00	0 01468	2 40	0 01768	2 80	0 02070

This table will be useful also in computing the term

$$\frac{S}{15(1-\lambda)\cos\delta} = \tfrac{1}{15} SB \sec\delta$$

The reduction of an observed transit of the moon is then as follows The transit over each thread is reduced to the middle thread (or mean thread) by adding the correction iF to the observed times, and the mean of the several results is taken as the clock time of transit of the limb over the middle (or mean) thread, or this time may be found by multiplying the mean of the equatorial intervals of the observed threads by F and adding the product to the mean of the observed times This time is then reduced to the meridian by adding the correction $(m + n\tan\delta' + c'\sec\delta')F\cos\delta'$ or $(m\cos\delta' + n\sin\delta' + c')F$, in which we may take $\delta' = \delta - \pi\sin(\varphi' - \delta)$ Then, adding the clock correction, we have the right ascension of the limb at the instant of its transit over the meridian Finally, adding or subtracting the term $\frac{S}{15(1-\lambda)\cos\delta}$, we have the right ascension of the moon's centre at the instant of its transit over the meridian

When the moon has been observed on all the threads, the computation of F by the above method may be dispensed with, as an approximate value, sufficient for computing the reduction to the meridian, may be inferred from the observed times on the first and last thread For, calling the observed interval between these threads I, and the equatorial interval i, we have $I = iF$, whence

$$F = \frac{I}{i}$$

If we omit the factor $1 - \lambda$ throughout, the right ascension obtained is that which corresponds to the instant of the observation instead of the instant of meridian passage

EXAMPLE —The transit of the moon's first limb was observed at the U S Naval Academy on May 29, 1855, as follows.

	Thread	Clock
	I	$15^h\ 3^m\ 57^s.5$
	II	4 10 3
(Clamp east)	III	4 23 2
	IV	4 36 2
	V	4 49 0
	VI	5 1 8
	VII	5 14 6

For the Naval Academy we have $\varphi' = 38° 47' 38''$, and $\log \rho = 9.99943$, and the longitude from Greenwich is $5^h\ 5^m\ 57^s$

The constants of the transit instrument were $m = + 0^s.251$, $n = - 0^s.162$, $c = + 0^s.093$, and hence (Art 126) $c' = + 0^s.093 - 0^s.016 = + 0^s.077$ The clock correction to sidereal time was $+ 1^m\ 25^s.11$. The equatorial intervals of the threads from the middle thread were

i_1	i_2	i_3	i_5	i_6	i_7
$+ 35^s.65$	$+ 23^s.72$	$+ 11^s.78$	$- 11^s.77$	$- 23^s.77$	$- 35^s.67$

From the American Ephemeris we find for the culmination at the Naval Academy on May 29, 1855,

$$\pi = 57' 46''.1 \qquad S = 15' 46''.5$$
$$\delta = -17° 58' 53'' \qquad \Delta\alpha = 2^s.2147$$

To illustrate the method of reducing the observations to the middle thread, we will first find the factor F by direct computation We have $\varphi' - \delta = 56° 46' 31''$, $\log \rho \sin \pi \cos(\varphi' - \delta) = 7.96355$, and hence

$$\begin{aligned} \log A &= 9.99599 \\ \log B &= 0.01629 \\ \log \sec \delta &= 0.02175 \\ \hline \log F &= 0.03403 \end{aligned}$$

Multiplying the equatorial intervals by F, we find the reductions of the several threads to the middle thread to be

I	II	III	V	VI	VII
$+ 38^s.56$	$+ 25^s.65$	$+ 12^s.74$	$- 12^s.73$	$- 25^s.71$	$- 38^s.58$

The clock times of transit over the middle thread, according to the observations on the several threads, were, therefore,

I	$15^h\ 4^m\ 36^s.06$
II	35.95
III	35.94
IV	36.20
V	36.27
VI	36.09
VII	36.02
Mean T =	15 4 36.08

To compute the instrumental correction, we have $\pi \sin(\varphi' - \delta) = 48'.3$, whence $\delta' = -18° \ 47'.2$, $m + n \tan \delta' + c' \sec \delta' = + 0^s.387$, and therefore

$$(m + n \tan \delta' + c' \sec \delta') F \cos \delta' = + 0^s.40$$

Applying this term to the above mean, we have

Clock time of transit of the limb		$= 15^h\ 4^m\ 36^s.48$
Clock correction,	ΔT	$= + \ 1 \ 25.11$
R A of the limb at transit		$= 15 \ 6 \ 1.59$
$\dfrac{S}{15(1-\lambda)\cos\delta}$		$= \ 1 \ 8.88$
R A of moon's centre at transit, α		$= 15 \ 7 \ 10.47$

The factor F might have been approximately deduced from the first and last observations, which give the interval $I = 77^s.1$, and the equatorial interval between the extreme threads is $i = 35^s.65 + 35^s.67 = 71^s.32$, whence

$$\log F = \log \frac{77.1}{71.32} = 0.0338$$

which is sufficiently accurate for reducing the instrumental correction

The "sidereal time of the semidiameter passing the meridian," or $\dfrac{S}{15(1-\lambda)\cos\delta}$, may be taken from the table of Moon Culminations given in the Ephemeris

The clock correction employed in deducing the moon's right ascension should be deduced from stars as nearly as possible in the same parallel of declination (See Art 153) The "moon culminating stars" are stars lying nearly in the moon's path whose

positions have been carefully determined for this purpose (See Vol I Art 229)

155 *Transits of the sun or a planet* —The formula (119) is applicable in general to any celestial body, but, in the case of the sun and planets, the parallax is so small that its effect upon the time of transit over a side thread is inappreciable so that we may take simply

$$F = \frac{1}{(1-\lambda)\cos\delta} = B\sec\delta$$

and, consequently, also put δ for δ' The formula for computing the right ascension of the centre of the sun or a planet over any given thread is, therefore,

$$\alpha = T + \Delta T + i B\sec\delta + (m + n\tan\delta + c'\sec\delta) B \pm \tfrac{1}{15} S B\sec\delta \quad (120)$$

in which (λ denoting the change of right ascension in one sidereal second) we have

$$B = \frac{1}{1-\lambda}$$

The logarithm of B may be readily computed Putting $\Delta\alpha$ for the change of right ascension in one hour of mean time (which change is given in the Ephemeris for the sun), we have, since one mean hour is equal to 3610 sidereal seconds,

$$\lambda = \frac{\Delta\alpha}{3610}$$

$$\text{*}\log B = -\log\left(1 - \frac{\Delta\alpha}{3610}\right)$$

$$= \Delta\alpha\,\frac{M}{3610}$$

in which $M = 0\ 43429$, the modulus of the common system of logarithms Performing the division of M by 3610, we find

$$\log B = 0\ 00012 \times \Delta\alpha \quad (121)$$

in which $\Delta\alpha$ must be expressed in seconds of time

In the British Nautical Almanac, the change of right ascension $\Delta\alpha$ in one hour of longitude is given for each planet In this case, we have

* By the formula $\log(1-x) = -M(x + \frac{1}{2}x^2 + \&c)$, where the square and higher powers of x are so small as to be inappreciable in the present case

$$B = 1 + \frac{\Delta\alpha}{3600}$$

the logarithm of which may also be found by (121) with sufficient accuracy, that is, within a unit of the fifth decimal place

The term $\frac{1}{15} SB \sec\delta$, or "the sidereal time of the semidiameter passing the meridian," is given in the Ephemeris for the sun and each of the planets When both limbs have been observed on all the threads, this term is not required, since the mean of all the observations is evidently the time of the passage of the centre over the mean of the threads If this mean is to be reduced to the middle thread, there will remain the small correction $\Delta iB \sec\delta$ to be applied (Art 133), for which we may take $\Delta i \sec\delta$ We may also put $m + n \tan\delta + c' \sec\delta$ instead of $(m + n \tan\delta + c' \sec\delta)B$, unless m, n, and c' are unusually great

The reduction of transits of the sun observed with a sidereal clock is greatly facilitated by the use of Table XII of BESSEL's *Tabulæ Regiomontanæ*, which contains every thing necessary for the purpose, for each day of the *fictitious year* (Vol I Art 406)

156 *Transits of the sun observed with a mean time chronometer* — A mean time chronometer is often used with the portable transit instrument, and transits of the sun are then observed solely for the purpose of determining the chronometer correction In this case, the mean motion of the sun corresponds with that of the chronometer, and therefore the factor B may be put equal to unity, unless we wish to obtain extreme precision by taking into account the small difference between the mean motion of the sun and its actual motion at different seasons of the year, a degree of precision quite superfluous in the use of a portable instrument If we put

E = the equation of time for the instant of transit, positive when additive to apparent time,

$S' = \frac{1}{15} S \sec\delta$ = the mean time of the sun's semidiameter passing the meridian, which may be taken from the Ephemeris,

τ = the reduction to the meridian, found either by (82), (86), or (87),

T = the observed chronometer time of the transit of the sun's limb over a thread whose equatorial interval is i,

ΔT = the chronometer correction to mean time,

t = the chronometer time of the transit of the sun's centre,

en we have

$$t = T + i \sec \delta \pm S' + \tau \tag{122}$$

ıd

$$12^h + E = t + \Delta T$$

$$\Delta T = 12^h + E - t \tag{123}$$

EXAMPLE —On May 17, 1856, the transit of the sun was ob-
erved at the Naval Academy with a portable instrument as below
Clamp West)

Thread	Mean time chronometer	
	1st Limb	2d Limb
I	$11^h\ 55^m\ 42^s.2$	$11^h\ 57^m\ 56^s.6$
II	55 57 4	lost
III	56 12 0	58 26 7
IV	lost	58 41 7
V	56 42 3	lost

There had been found $a = +\ 0^s.35$, $b = -\ 0^s.27$, $c = -\ 0^s.12$.
The thread intervals from middle thread were

$$\begin{array}{cccc} i_1 & i_2 & i_4 & i_5 \\ +\ 28^s.25 & +\ 14^s.15 & -\ 14^s.27 & -\ 28^s.81 \end{array}$$

The longitude being $5^h\ 5^m\ 57^s$ west of Greenwich, we find from the Ephemeris for the transit over this meridian,

$$\delta = +\ 19°\ 29'.1 \qquad S' = 67^s.24 \qquad E = -\ 3^m\ 49^s.71$$

The reductions of the several threads to the middle thread, or the values of $i \sec \delta$, are, therefore,

$$\begin{array}{cccc} \text{I} & \text{II} & \text{IV} & \text{V} \\ +\ 29^s.97 & +\ 15^s.01 & -\ 15^s.14 & -\ 30^s.03 \end{array}$$

Applying these to the observed times, and also the quantity $\pm S'$, we have the chronometer time of the transit of the sun's centre over the middle thread, as deduced from the several threads, as follows

	Thread	Chronometer
1st Limb,	I	$11^h\ 57^m\ 19^s.41$
	II	19 .65
	III	19 .24
	V	19 .51
2d Limb,	I	19 .33
	III	19 .46
	IV	19 .32
	Mean =	11 57 19 .42

The latitude being $\varphi = 38° 58'.9$, we find, by (87), $\tau = -0^s.27$, and hence, finally,

$$t = 11^h\ 57^m\ 19^s.15$$
$$12^h + E = 11\ \ 56\ \ 10.29$$
$$\Delta T = -\ \ 1\ \ 8.86$$

157 *Correction of the transit of the moon or a planet when the defective limb has been observed.*—Let us consider the general case of a spheroidal planet partially illuminated. The transit of the observed limb is reduced to that of the centre by employing instead of S in (119) the perpendicular distance from the centre of the planet to that tangent to the limb which lies in the direction of the transit threads, or, in the case of meridian transits, the perpendicular upon the declination circle which is tangent to the limb. The formulæ for computing this perpendicular, in general, are discussed in Vol. I., *Occultations of Planets*, where we have found that in all practical cases the formulæ (628) of p. 580 may be considered as rigorous. In those formulæ the angle ϑ is the angle which the required perpendicular makes with the axis of the planet, so that, p being the angle which this axis makes with a declination circle, we have here

$$\vartheta = 270° - p \qquad \text{or} \qquad \vartheta = 90° - p$$

according as the first or second limb is observed. The values of p as well as of V and c required are found as in Vol. I. Arts. 351, 352.

But this rigorous process will seldom be required, and when we regard the planet as spherical, the formulæ can be simplified as follows. For a spherical planet we make $c = 1$, and substitute the value $90° - p$ for ϑ, which applies to the 2d limb, whence, by Vol. I. formulæ (628) and (623),

$$\sin\chi = \cos p \sin V$$

or

$$\left.\begin{aligned} \sin\chi &= \frac{R}{R'}\cos D\sin(\alpha' - A) \\ s'' &= s\cos\chi = \frac{s_0}{r}\cos\chi \end{aligned}\right\} \qquad (124)$$

where α' and A are the right ascensions of the planet and the sun respectively (and $\alpha' - A$ is therefore in the present case the sun's hour angle at the time of the observation), D = the sun's declination, R, R' = the heliocentric distances of the earth and the planet respectively, s = the apparent semidiameter of the planet at the time of the observation, s_0 = the mean semi-diameter (Vol I p. 578), r = the geocentric distance of the planet, and s'' = the required perpendicular For the moon we may put $R = R'$.

The above value of $\sin\chi$ is deduced for the second limb. and, therefore, by Vol I Art 354, it will be positive when the second limb is defective Since we should have to substitute $270° - p$ for ϑ, or $-\cos p$ for $\sin\vartheta$, in the case of the first limb, which would only change the sign, it follows that *the value of $\sin\chi$ computed by the above formula will be positive or negative according as the 2d or the 1st limb is defective*

The value of s'' is to be substituted for S in (119).

EFFECT OF REFRACTION IN TRANSIT OBSERVATIONS.

158 Since the refraction changes the zenith distance, its effect upon the time of transit over a side thread has the same form as that of the parallax If then z and z' denote respectively the true and apparent zenith distances, the time required by the star to describe the interval i is iF, where F is found by (118); or, denoting this time by I', and putting $\lambda = 0$,

$$I' = \frac{i}{\cos\delta}\,\frac{\sin z}{\sin z'}$$

Now, the refraction is represented by the formula $r = k\tan z'$, k being nearly constant, and for values of z not greater than 85°, we may here assume $k = 58''$, and $z = z' + k\tan z'$, whence we find

$$\frac{\sin z}{\sin z'} = 1 + k\sin 1'' = 1\,00028$$

Hence the error in computing the interval by the formula $I = i \sec \delta$ is $I \times .00028$, which amounts to $0^s.01$ when $I = 36^s$; and this is as great an interval as is ever used for an equatorial star. The error of observation for other stars increases with the interval I, or as the value of $\sec \delta$; so that the error produced by neglecting the refraction is always much less than the probable error of observation. Moreover, the error is wholly eliminated when the star is observed on all the threads, or on an equal number on each side of the middle thread.

If, for any special purpose, it becomes necessary to correct an observation on an extreme thread for refraction, we can take, as a very accurate formula,

$$I' = i \sec \delta (1 + k \sin 1'')$$

k being found by BESSEL's Refraction Table (Table II.), and, for a near approximation,

$$I' = i \sec \delta \times 1.00028$$

MERIDIAN MARK

159. For a fixed instrument, it is desirable to have a permanent meridian mark by which the azimuth of the telescope may be frequently verified. A triangular aperture (for example) in a metallic plate mounted upon a firm pier, with a sky background, makes a good day mark, the thread of the telescope being brought into coincidence with it by bisecting the vertical angle of the triangle. If the mark is sufficiently near, a light may be placed behind it for night observations. A simple mark like this, however, must be so remote as to be distinctly defined in the telescope without a change of the stellar focus, and even for instruments of moderate power this requires a distance of upwards of a mile.

It is found, however, that the apparent direction of these distant marks is often subject to changes from the anomalous lateral refractions which take place in the lower strata of the atmosphere, produced chiefly by variations of temperature. If a sheet of water intervenes, the mark is found to be especially unsteady. It was to remedy this difficulty that RITTENHOUSE first proposed the plan of placing the mark comparatively near to the instrument, but in the focus of a lens which receives the divergent rays from the mark and transmits them to the

telescope in parallel lines, a suggestion which has resulted in various important improvements in the methods of investigating instrumental errors, such as the collimating telescopes, the mercury collimator, &c, which have already been fully treated of in the preceding pages The apparent direction of the mark will be that of the line joining the optical centre of the lens and the mark At Pulkowa, the lens for this purpose is placed on a pier within the transit room, and has the extraordinary focal length of about 556 feet,* which is, therefore, the distance of the mark from the pier The mark consists of a circular aperture $\frac{1}{16}$ of an inch in diameter, in a metallic plate, presenting in the telescope a planetary disc of only 2″ in diameter, which can be bisected by the thread of the telescope with the greatest precision The merit of such a mark depends on the stability of the two points, the mark and the lens, which determine the direction of its optical line These points, mounted as they are upon solid stone piers, are not liable to greater relative changes than the piers of the telescope itself, and therefore the changes of direction of their optical line will be less than those of the telescope in the proportion of the focal length of the lens to the length of the rotation axis of the telescope, which in this case was as 556 feet to 3 61 feet, or as 154 1 Now, according to STRUVE,† the diurnal changes in the direction of the axis of a well mounted transit instrument are seldom more than one or two seconds of arc, but $\frac{1}{154}$ of a second of arc is a quantity absolutely imperceptible even in the best transit telescopes Two marks of the same kind were used by STRUVE, one north and the other south of the telescope, and they served not only as meridian marks, but as collimators according to the method of Art 145

In the same manner, one of the collimators of the Greenwich transit circle is used as a meridian mark, although it is within the transit room In this case, the advantage gained is comparatively small

It is not necessary that the mark be precisely in the meridian of the instrument It is sufficient if it is so near to it that its deviation in azimuth can be measured with the telescope micrometer. Let A be its azimuth west of north Direct the telescope to it, and measure its distance m from the middle thread, giving

* *Description de l'Observatoire de Poulkova*, p 126 † Ibid p. 128.

the measure the positive sign when the mark, as seen in the field, is to the apparent west of the thread, then, a being the azimuth constant of the telescope determined by stars, and c the collimation constant, we have

$$A = a - m - c \tag{125}$$

So long as the values of A thus found appear to vary only within the limits of the probable errors of observation, their mean is to be taken as expressing the constant position of the mark, and during this period the azimuths of the transit instrument will be found at any time by the formula

$$a = A + m + c$$

If the instrument is reversed and the micrometer distance of the mark west of the middle thread is now m', we have

$$a = A + m' - c$$

which, combined with the former equation, gives

$$\left.\begin{aligned} a &= A + \tfrac{1}{2}(m + m') \\ c &= \tfrac{1}{2}(m' - m) \end{aligned}\right\} \tag{126}$$

which last equation gives c with its proper sign for the first position of the instrument

PERSONAL EQUATION

160 It is often found that two observers, both of acknowledged skill, will differ in the time of transit of a star observed by "eye and ear," by a quantity which is nearly the same for all stars. Such a *constant* difference does not necessarily prove a want of skill in subdividing the second according to the method of Art. 121, but may proceed from a discordance between the eye and the ear, which affects the judgment as to the point of the field to which the clock beats are to be referred Thus, if a and b, Fig 44, are the true positions of a star at two successive beats of the clock, we may suppose the observer to allow a certain interval of time to elapse after each beat before he associates it with the star's position (possibly in some cases he may anticipate the beat) so that he refers the beats to two different points a' and b', whose distance from each other is, however, the same

Fig 44

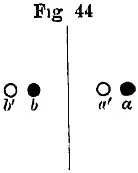

as that of a and b The ratio in which the distance $a'b'$ is divided he may still estimate correctly.

The distance between a and a' may be called the *absolute personal equation* of the observer, and, if it could be determined, might be applied as a correction to all his observations But, so long as his observations are not combined with those of another observer, the existence of such an error cannot be discovered, nor is it then of any consequence For the process of determining the right ascension of an unknown star consists essentially in applying to the right ascension of a known star the *difference* of the clock times of the transit of the two stars (corrected for instrumental errors and rate), and this difference will evidently be the same as if the observer had no personal equation

In order to combine the observations of two individuals—for example, to deduce the right ascension of an unknown star whose transit is observed by A, from the time of transit of a known star observed by B—it is necessary to know the difference of their absolute equations,—*i e.* their *relative personal equation* Thus, if the times observed by A are later than those observed by B by the quantity E, then B's observations may be reduced to A's (that is, to what they would have been if observed by A) by increasing them all by E

The relative personal equation may be found by the following methods

First Method—Let one observer note a star's transit over the first three or four threads, and the other observer its transit over the remaining threads. Reduce the observations of each to the middle thread (or to any assumed thread) by applying the known equatorial intervals multiplied by sec δ The difference between the mean results for the two observers will be a value of their required personal equation The mean of the values found from twenty or thirty (or more) such observations will be adopted, provided the probable error of such a determination (as found from the discrepancies of the individual results) is not greater than the equation itself, in which case the difference between them should, of course, be regarded as accidental, and the use of a constant equation would introduce error instead of eliminating it. This remark may be necessary to guard inexperienced observers against an incautious adoption of an equation derived from insufficient data We may also remark here that constant personal equations are more apt to exist between trained

observers than between inexperienced ones, the former having by practice acquired a fixed *habit* of observation

Second Method —The preceding method is liable to the objection that as the second observer takes the place of the first in a somewhat hurried manner, his usual habit of observation may be disturbed To obviate this, let each observer independently determine the clock correction by fundamental stars, then the difference of these corrections, both reduced for clock rate to the same epoch, will be the personal equation The equation thus found involves the errors of the stars' places and of the clock rate The first will be inconsiderable if only fundamental stars are used, but may be entirely eliminated by the observers' exchanging stars on a following day and taking the mean of the two results The effect of error in the rate will be insensible if the stars are so distributed that the means of the right ascensions of the stars of the two groups employed by the two observers are nearly equal

Third Method —An equatorial telescope is sometimes used for the purpose, as follows Two transit threads of the micrometer are adjusted in the direction of a declination circle, and the telescope is directed towards a point in advance of any star not far from the meridian, and clamped The observer A notes the transit of the star over the first thread, and the observer B the transit over the second thread The telescope is then moved forward again in advance of the star, and clamped The observer B now notes the transit over the first thread, and A the transit over the second thread This gives one determination of their personal equation, for, putting $E =$ the reduction of B's observation to A's, and $I =$ the interval of the threads for the observed star, M and M' the observed intervals, we have

$$M = I + E \qquad\qquad M' = I - E$$

whence

$$E = \frac{M - M'}{2}$$

This process being repeated a number of times, M will be the mean of all the intervals when A begins, and M' the mean of those when B begins

This method is also open to the objection that the observers succeed each other so rapidly that their usual habit of deliberate observation is likely to be disturbed Moreover, if their per-

sonal equation is required to reduce their observations made with a transit instrument, it should be determined with this instrument, for it is possible that the equation may not be the same with instruments of different powers

The same clock, also, should be used in determining the personal equation that is used in the observations, for it is very probable that the peculiarity of the clock-beat affects the equation *

It is one of the advantages of the American (the electro-chronographic) method of recording transits that the personal equation is very much reduced still it is not wholly destroyed The same methods may be employed to determine its amount as when the observations are made by eye and ear

It may also be remarked that not only should the same telescope and the same clock be employed in determining the personal equation, as in the observations to which it is to be applied, but also the observer's general *physical* condition should be as nearly as possible the same Even the posture of the body has been found to have some effect upon the observer's estimate of the time of transit, and it can hardly be doubted that the personal equation will fluctuate more or less with the observer's health, or the condition of his nervous system

That the personal equation depends upon no organic defect of either the eye or the ear, but upon an acquired habit of observation, seems to follow from the fact that it is usually greatest in the case of the most practised observers In 1814 there was no personal equation between those eminently skilful astronomers BESSEL and STRUVE, but in 1821 they differed by $0^s\!\cdot\!8$, and in 1823 by a whole second, a progressive increase indicating the gradual formation of certain fixed habits of observation. So far from invalidating the results of either observer, this fact would indicate that their absolute personal equations were in all probability very constant for moderate intervals of time, and therefore had no appreciable effect upon their results so long as these results did not depend upon a combination of their observations with those of other observers

* BESSEL found that with a chronometer beating half seconds he observed transits $0^s\!\cdot\!49$ later than with a clock beating whole seconds

PERSONAL SCALE

161. Prof PEIRCE has called attention to the fact that experienced observers often acquire a fixed erroneous habit of estimating particular fractions of the second Thus, when a star is really at $0^s 3$ from a thread, one observer may have a habit of calling it $0^s 4$, while another may incline rather to $0^s 2$, or, again, when the fraction is less than 0 1, one invariably takes 0 1, while the other as invariably neglects it and puts 0 0 Thus each observer is conceived to have his own *personal scale* for the division of the second

In a very large number of individual transits over threads by the same observer, there is, according to the doctrine of probabilities, the same chance for the occurrence of each of the decimals 0, 1, 2, &c, if the *observations are perfectly made, or if the errors of the observers are purely accidental*, otherwise, one or more of these decimals will occur more frequently than the rest Hence, by simply counting the number of times each decimal occurs in a very large number of observations by the same observer, the personal scale of this observer may be determined

It is easily shown that the effect of an erroneous personal scale is to increase or diminish the mean result of a large number of observations by a constant quantity For example, suppose that in 1000 observations of a certain observer the fraction 0 3 appears but 20 times, while 0 4 appears 180 times, and that each of the other fractions appears 100 times Then, since each fraction should appear 100 times, the mean of any large number of observations by this observer will probably be too great by the quantity

$$\frac{(0\,4 \times 180 + 0\,3 \times 20) - (0\,4 \times 100 + 0\,3 \times 100)}{1000} = 0\,008$$

The effect, therefore, being constant, will be combined with the personal equation determined from a large number of observations, and may be regarded as always forming a part of it Hence it follows that the application of the personal equation, which involves the errors of the personal scale, does not necessarily eliminate the observer s constant error from *each* observation, but that it probably does eliminate it from the mean of a large number of observations

PROBABLE ERROR OF A TRANSIT OBSERVATION.

162 That part of the error in the observed time of transit of a star which is independent of the personal equation and other constant errors, and is irregular or accidental, may be distinguished as the *probable error*, and it will be the only error of observation which will affect the final result, if the observations of two observers are not combined It may be determined for each observer by comparing the several values of the thread intervals given by his observations Let

$I =$ the observed interval of two threads whose equatorial interval is i,

then, since we should have $i = I \cos \delta$, each observation furnishes a value of i, and from a great number of values the probable error r of each single determination is deduced by the formula*

$$r = 0\ 6745 \sqrt{\frac{\Sigma(v^2)}{m-1}}$$

in which the values of v are the residuals found by subtracting the known value of i from each value found from observation, and m is the number of observations

Now put

$\varepsilon =$ the probable error of the observed time of transit of an *equatorial* star over a thread;

then, since the time of transit over each thread is affected by this error, we have

$$2\varepsilon^2 = r^2$$

whence

$$\varepsilon = 0\ 6745 \sqrt{\frac{\Sigma(v^2)}{2(m-1)}}$$

EXAMPLE.—From the transit observations made by Mr ELLIS at the Greenwich Observatory in 1843, the observed intervals between the successive threads (*i e.* from 1st to 2d, from 2d to 3d, &c) were found as in the following table the true equatorial intervals being those given in the fourth column The difference

* Appendix, Art 17

between the computed and the true equatorial interval (v) is given in the fifth column, and the last column gives v^2.

1843	Observed I	Computed $\iota = I \sec \delta$	True ι	v	v^2
March 8	13ˢ 8	12ˢ 79	12ˢ 89	— 0ˢ 10	0 0100
ν^1 *Tauri*	13 8	79	76	+ 03	9
$\delta = + 22° 27'$	14 0	93	87	+ 06	36
	14 0	93	91	+ 02	4
	13 7	66	88	— 22	484
	13 6	57	86	— 29	841
	13 8	85	89	— 04	16
ι *Tauri*	13 8	85	76	+ 09	81
$\delta = + 21° 21'$	13 9	94	87	+ 07	49
	13 9	94	91	+ 03	9
	13 8	85	88	— 03	9
	13 7	76	86	— 10	100
	13 7	65	89	— 24	576
μ *Geminor*	14 0	93	76	+ 17	289
$\delta = + 22° 35'$	14 0	93	87	+ 06	36
	14 0	93	91	+ 02	4
	13 9	84	88	— 04	16
	13 8	74	86	— 12	144
	$m = 18$,			$\Sigma(v^2) = 0\ 2803$	

Hence we find, by the above formula,

$$\varepsilon = 0^s\ 06$$

Taking a much greater number of the observations made by Mr Ellis of stars from the 3d to the 5th magnitude, I found $\varepsilon = 0^s\ 056$, which is probably smaller than will be found for most observers In the case of another well trained observer, I found $\varepsilon = 0^s\ 08$.

In the same manner, from a large number of Mr Ellis's observations of the moon I found his probable error in observing the transit of the first limb over a single thread to be $0^s\ 074$, and for the second limb $0^s\ 071$ In the case of another observer, I found for the first limb $0^s\ 078$, and for the second limb $0^s.094$

If we assume, then, that for moderately skilful observers $\varepsilon = 0^s\,08$ for a star, the probable error of the mean of the observations over seven threads will be $0^s\,08 - \sqrt{7}$, or only $0^s\,030$, the star being in the equator For the declination δ the probable error will be $0^s\,03 \sec\delta$

The probable error thus found is the accidental error, composed of the error of the observer in estimating the fractions of a second (including the errors of his personal scale), and of the error arising from unsteadiness of the star, but it must not be taken as the measure of the degree of precision in the deduced right ascension or time *

163 The error of the right ascension derived from a single complete transit is composed of the following errors

1st The undetermined instrumental errors, depending upon the errors in the determination of the constants a, b, and c,
2d The errors of the assumed clock correction and rate,
3d The error arising from irregularity of the clock,
4th The error in the observer's personal equation, arising from an imperfect determination of the equation, or from fluctuations in its value, depending on the observer's physical and mental condition,
5th The accidental error of observation, composed of the observer's error in estimating the fractions of a second, and of errors arising from unsteadiness of the star,
6th The error arising from an atmospheric displacement of the star, which may possibly be constant during the transit over the field of the telescope, and may be called the *culmination error*

We may form an estimate of the total effect of all these sources of error by examining the several values of the right ascension of a fundamental star deduced from different culminations, and reduced for precession and nutation to a common epoch Thus, there were found from the different observations of the transit of α *Arietis*, in the year 1852 at the Greenwich Observatory, the following values of its mean right ascension on Jan 1, 1852. Putting $\alpha = 1^h\,58^m\,50^s + x$, the values of x were—

---

* In this connection see the remarks of BESSEL in the Berlin Jahrbuch for 1823 p 166

x	x	x	x
$0^s.40$	$0^s.34$	$0^s.59$	$0^s.37$
44	31	42	34
39	42	42	34
39	45	46	59
42	53	33	24
40	35	32	31

The mean is $x = 0^s.40$, and from the differences between this mean and the several values of x we deduce $r = 0^s.057$ as the probable error of a single determination of the right ascension of this star. In the same manner, I find from the observations of γ *Ceti* during the same year $r = 0^s.063$, and for α *Ursæ Majoris* $r = 0^s.131$. If these be multiplied by the respective values of $\cos\delta$, we have $0^s.053$, $0^s.063$, $0^s.063$, the mean of which, or $0^s.06$, expresses nearly the probable error of a single determination of an equatorial star with the transit circle of the Greenwich Observatory in 1852. A larger number of stars should be examined to determine this error with certainty, but the above will suffice to illustrate the mode of proceeding. It must not be forgotten, however, that this instrument is never reversed, and all its results *may* be affected by small constant errors peculiar to the several stars.

If we denote the probable error of observation, or the 5th of the above enumerated errors, by ε, and the combined effect of all the rest by ε_1, we have

$$r^2 = \varepsilon^2 + \varepsilon_1^2$$

whence, taking $r = 0^s.06$, and $\varepsilon = 0^s.03$, as above found, we deduce $\varepsilon_1 = 0^s.052$; so that if ε were reduced to zero—that is, if the observations were made *perfectly*—the right ascension determined by a single transit would be improved by only $0^s.01$. Hence it follows that *an increase of the number of threads for the purpose of reducing the error of observation would be attended by no important advantage*.

Bessel thought five threads sufficient.

164. We see from these principles that the weight of an observed transit is not to be assumed to vary as the number of threads, as it would do were there no culmination error or unknown instrumental errors. For practical purposes it will be sufficient to regard the probable error of a transit as composed

only of the error of observation and the culmination error The latter will then be the quantity denoted above by ε_1, and, if we now put

ε = the probable error of a transit over a single thread,
n = the number of threads observed,
r = the probable error of the observed right ascension,

we shall have

$$r^2 = \varepsilon_1^2 + \frac{\varepsilon^2}{n}$$

If then we also put

E = the probable error of an observation whose weight is unity,
p = the weight of the given observation,

we shall have, according to the theory of least squares,

$$p = \frac{E^2}{\varepsilon_1^2 + \frac{\varepsilon^2}{n}} \tag{127}$$

The unit of weight is arbitrary, and hence E also is arbitrary If N is the total number of threads in the reticule, and a complete observation on them all is to have the weight unity, we shall have

$$E^2 = \varepsilon_1^2 + \frac{\varepsilon^2}{N}$$

and the formula will become

$$p = \frac{\varepsilon_1^2 + \frac{\varepsilon^2}{N}}{\varepsilon_1^2 + \frac{\varepsilon^2}{n}} \tag{128}$$

If we substitute the values $\varepsilon_1 = 0.052$, $\varepsilon = 0.09$, which are sufficiently accurate for an approximate estimation of the weights of observations, we shall find, very nearly,*

$$p = \frac{1 + \frac{3}{N}}{1 + \frac{3}{n}} \tag{129}$$

* See also Vol I Art 236, where a slightly different formula is obtained

This will be a very convenient formula in practice in cases where there is no reason to depart from the above assumed values of ε_1 and ε. The observer who has determined these quantities for himself will, of course, employ (128) directly.

It may be useful to illustrate, by the aid of this formula, the proposition announced at the end of the preceding article. If $N = 7$ and $E = 0^s.062$, the weights and probable errors of observations on one or more threads will be as below.

n	p	$\frac{E}{\sqrt{p}}$
1	0.36	$0^s.104$
2	0.57	0.082
3	0.71	0.073
4	0.82	0.069
5	0.90	0.065
6	0.95	0.063
7	1.00	0.062
25	1.25	0.055
∞	1.43	0.052

We see that the advantage of seven threads over five is almost insignificant, and BESSEL's opinion is confirmed.

165. The probable error of a single transit of a star recorded by the electro-chronograph does not appear to be much less than that of one observed by eye and ear by experienced observers,* but it must be remembered that it takes but a short time to acquire the requisite skill in the use of the chronograph, while the small probable errors by eye and ear above adduced are evidences of long training. The personal equation, however, is much less in the use of the chronograph, and probably more constant. It is not unlikely that a considerable portion of the total error of a determination of right ascension, as above found, is the result of variations in the observer's personal equation; and, if so, the substitution of the chronograph for eye and ear will carry these determinations to a still more remarkable degree of accuracy.

* See Dr. B. A. GOULD's Report in the U. S. Coast Survey Report for 1857, p. 307.

APPLICATION OF THE METHOD OF LEAST SQUARES TO THE DETERMINATION OF THE TIME WITH A PORTABLE TRANSIT INSTRUMENT IN THE MERIDIAN

166 In the use of the portable transit instrument in the field, it is not always possible to mount it so firmly that its azimuth and level can be absolutely relied upon as constant for a whole day Frequently it is necessary to take all the observations at a given place within a few hours We must then observe such stars as are available at the time, and so conduct the observations and their reduction as to obtain the *most probable* result

First, as to the observations —The instrument having been brought very near to the meridian (see Art 125), a number of stars must be observed in both positions of the rotation axis, and, in general, about the same number of stars in each position Among these must be included at least one circumpolar star, and, if possible, two or three, one or more being below the pole The level should be observed at the beginning and end of the series, and before and after each reversal of the axis

Secondly, as to the computation —We assume that the thread intervals have been well determined, as also the value of a division of the level If they have not been found *before* the observations, they must, of course, be determined subsequently, only observing that no change of the instrument has occurred which might change the value of the thread intervals The mean of all the level determinations should be adopted as the constant value of b for all the observations, unless the differences of the several values are greater than the probable errors of observations made with the particular spirit-level used, in which case it will be better to interpolate a value of b for each star from the actually observed values The chronometer time T of transit over the middle thread or the mean thread being found for each star by employing the thread intervals when necessary, we shall suppose that observation has furnished only T and b for each star. The rate δT of the chronometer is also supposed to be approximately known The constants a and c, and the clock correction ΔT, are then to be found by a proper combination of the observations Let us put in formula (87), for each star,

$$
\begin{aligned}
A &= \text{the azimuth factor} = \sin(\varphi - \delta) \sec \delta, \\
B &= \text{the level factor} \quad = \cos(\varphi - \delta) \sec \delta, \\
C &= \text{the collimation factor} = \sec \delta,
\end{aligned}
$$

also, let each observation be reduced to some assumed time T_0, and put

$$\Delta T_0 = \text{the chronometer correction at the time } T_0,$$

whence

$$\Delta T = \Delta T_0 + \delta T (T - T_0)$$

Let

$$\vartheta = \text{an assumed approximate value of } \Delta T_0$$
$$\Delta\vartheta = \text{the required correction of } \vartheta$$

so that

$$\vartheta + \Delta\vartheta = \Delta T_0$$

then the formula (82) becomes

$$\alpha = T + \vartheta + \Delta\vartheta + \delta T (T - T_0) + Aa + Bb + Cc$$

in which every thing is known except the small quantities $\Delta\vartheta$, a, and c If we now put*

$$t = T + \delta T (T - T_0) + Bb$$
$$w = \vartheta - (\alpha - t)$$

then, since $\alpha - t$ and ϑ are each nearly equal to the clock correction, w is a small residual, and the equation is

$$Aa + Cc + \Delta\vartheta + w = 0 \qquad (130)$$

Each star gives an equation of condition of this form, and from all these equations the most probable values of a, c, and $\Delta\vartheta$ will be found by the method of least squares The sign of the term Cc will be changed when the axis of the instrument is reversed

If the observations are extended over a number of hours, it will not always be safe to assume that the azimuth a has been constant during the whole time We may then divide the observations into two groups, in one of which the azimuth will be denoted by a and in the other by a' The normal equations, formed by combining all the equations in the usual manner, will then involve the four unknown quantities a, a', c, and $\Delta\vartheta$

To determine the mean error of the resulting value of $\Delta\vartheta$, it must be remembered that when a and c have been eliminated by

---

* For greater precision (not always required in the use of a portable instrument), we may allow for the diurnal aberration Since α requires the correction $+ 0^s.021 \cos\phi \sec\delta$, we have merely to take

$$t = T + \delta T (T - T_0) + Bb - 0^s.021 \cos\phi \sec\delta$$

successive substitution, taking care to introduce no new factor into the equations, the coefficient of $\Delta\vartheta$ in the resulting final equation will be the weight p of the value of $\Delta\vartheta$ thus determined * Then, substituting the values of a, c, and $\Delta\vartheta$ in the equations of condition, and denoting the residual in each by v, we have the mean error of a single observation by the formula

$$\varepsilon = \sqrt{\frac{[vv]}{m - \mu}}$$

in which $[vv]$ = the sum of the squares of the residuals, m = the number of observations, and μ = the number of unknown quantities

The mean error of $\Delta\vartheta$ and ΔT_0 will be

$$\varepsilon_0 = \frac{\varepsilon}{\sqrt{p}}$$

and if we wish the *probable* errors, we multiply the mean errors by 0 6745

If any residuals are so large as to throw a doubt upon the observations, such doubtful observations may be examined by PEIRCE's Criterion †

If an observation consists of transits over only a portion of the threads, it may be well to give it a diminished weight, multiplying its equation of condition by the square root of the weight found by (129)

If the collimation constant c has been previously determined, we have only to include the term Cc in the quantity t, thus, putting

$$t = T + \delta T(T - T_0) + Bb + Cc$$
$$w = \vartheta - (\alpha - t)$$

the equation for each star will be

$$Aa + \Delta\vartheta + w = 0 \qquad (131)$$

and the determination of a and $\Delta\vartheta$ from these equations is then exceedingly simple

EXAMPLE.—The following observations were taken on the United States North-Western Boundary Survey with a portable

* See Appendix

† See Appendix, Art. 57–60

transit instrument in the meridian The stars were mostly selected from the British Association Catalogue, and are conveniently designated by their numbers in this catalogue. But their apparent places have been derived from the more reliable authority the Greenwich Twelve Year Catalogue The apparent place of *α Ursæ Majoris* is derived from the American Ephemeris Other stars from the British Association Catalogue, observed on the same evening, have been excluded because they are not given in the later catalogues

Camp Simiahmoo —1857, July 27 Latitude 49° 0′ N

No	Star	L	Threads							Mean.	Level
			I	II	III	IV	V	VI	VII		
1	B A C 6890	W	15^s 3	43^s 6	12^s 3	40^s 8	9^s 2	37^s 9	6^s 2	22^h 4^m 40^s 76	+ 0^d 75
2	" 6434	"	27 2		15 2	38 8	2 3	26 3	50 1	22 10 38 68	"
3	" 6441	"	23 8	47 8	11 3	35 3	58 6	22 6	46 3	22 11 35 10	"
4	" 6489	"	21 3	46 8	12 5	37 8	2 8			22 18 37 58	"
5	" 6836 }	"	30 3	33 3	38 2	42 0				23 13 41 63	"
6	" " }	E	52 3	48 2	43 9					23 13 40 49	— 0 70
7	" 3232 S P	"	32 1	36 9	43 2	49 4	54 5	59 9	5 9	0 46 48 84	— 0 51
8	" 3346 S P	"	39 7	22 7	7 0	50 1	33 6	16 9	0 3	1 5 50 04	— 0 48
9	" 7686	"	53 1	40 0	26 7	13 9	0 7	48 6	35 3	1 22 14 04	— 0 44
10	" 7778	"	48 3	8 9	29 2	49 4	10 3	30 8	51 2	1 34 49 73	— 0 42
11	" 8647 S P	"	26 8	20 7	17 5	11 8	7 3	1 9	57 0	1 57 11 86	— 0 38
12	α Urs Maj S P	"	32 7	19 8	7 9	55 0	42 6	30 0	17 4	2 19 55 06	— 0 33

The threads are numbered from the end of the axis at which the illuminating lamp is placed, and the seconds of the chronometer are recorded, not in the order of observation, but in the columns appropriated to the several threads. The column "Mean" gives the time of passage over the mean of the threads, employing in the case of the defective transits the following equatorial intervals from the mean

$$\overset{i_1}{+65^s.82} \quad \overset{i_2}{+44^s.05} \quad \overset{i_3}{+21^s.84} \quad \overset{i_4}{-0^s.08} \quad \overset{i_5}{-22^s.00} \quad \overset{i_6}{-43^s.79} \quad \overset{i_7}{-65^s.85}$$

where the signs are given for Lamp West The column marked L gives the position of the lamp end of the axis The value of one division of the level was 0^s 105 Only one observation of the level was made during the observations "lamp west" Two observations of the level were made during the observations "lamp east," one near the beginning, the other near the end, of

the series, from which those given in the table are obtained by interpolation

Stars observed at their lower culminations are marked S. P. (sub polo)

The chronometer was sidereal, and its rate was losing 0ˢ.40 daily

A first computation of the observations having shown that the observations lamp west and lamp east give very different results, the presumption is that in reversing the axis the observer disturbed the instrument, a supposition rendered still more probable by the change of level. It will, therefore, be proper to compute the observations upon the supposition of a different azimuth for the two positions of the axis

The apparent places of the stars on the given date were as follows

Star	α	δ
B A C 6390	$18^h\ 39^m\ 38^s.71$	$+39°\ 31'$
" 6434	18 45 35.70	-22 55
" 6441	18 46 31.91	-22 51
" 6489	18 53 34.36	-30 5
" 6836	19 48 41.61	$+69$ 53
" 3232	9 21 46.76	$+70$ 29
" 3346	9 40 48.22	$+59$ 44
" 7686	21 57 14.44	$+72$ 28
" 7778	22 9 49.07	$+56$ 18
" 3647	10 32 9.78	$+66$ 30
α Urs Maj	10 54 53.21	$+62$ 31

The observed times of transit are to be reduced for the chronometer's rate to some common epoch, which we shall here assume to be $T_0 = 0^h$ by the chronometer. The assumed correction of the chronometer at this time will be

$$\vartheta = -3^h\ 25^m\ 0^s$$

The formation of the equations of condition for the first and last stars is as follows:

	L W	L E
	B A C 6390	α Ursæ Maj S P
δ	$+39° 31'$	$117° 29'$
$\varphi - \delta$	$+ 9 \quad 29$	$-68 \quad 29$
$\log \sec \delta$	0 1127	n0 3358
$\log \cos (\varphi - \delta)$	9 9940	9 5644
$\log \sin (\varphi - \delta)$	9 2169	n9 9686
$\log \cos (\varphi - \delta) \sec \delta = \log B$	0 1067	n9 9002
$\log \sin (\varphi - \delta) \sec \delta = \log A$	9 3296	0 3044
A	$+ 0 214$	$+ 2 016$
$\sec \delta = C$	$+ 1 296$	$- 2 166$
b	$+ 0^s 08$	$+ 0^s 03$
Observed mean	$22^h \; 4^m \; 40^s 76$	$2^h \; 19^m \; 55^s 06$
Rate to 0^h	$- 0 \; 03$	$+ 0 \; 04$
Bb	$+ 0 \; 10$	$+ 0 \; 02$
Diurnal ab $= - 0^s 021 \cos \varphi \sec \delta$	$- 0 \; 02$	$+ 0 \; 03$
t	22 4 40 81	2 19 55 15
α	18 39 38 71	22 54 53 21
$\alpha - t$	$-3 \; 25 \quad 2 \; 10$	$-3 \; 25 \quad 1 \; 94$
Assumed ϑ	$-3 \; 25 \quad 0$	$-3 \; 25 \quad 0$
w	$+ 2 \; 10$	$+ 1 \; 94$

Denoting the azimuth of the instrument for *L W* by a, and that for *L E* by a', and changing the sign of c for *L E*, the equations of condition for these two stars are, therefore,

$$+ 0\,214\, a + 1\,296\, c + \Delta\vartheta + 2^s\,10 = 0$$
$$+ 2\,016\, a' + 2\,166\, c + \Delta\vartheta + 1\,94 = 0$$

The equations for the other stars being found in the same manner, we have then

$$
\begin{array}{llllll}
1 & + 0\,214\, a & + 1\,296\, c + & & \Delta\vartheta + 2^s\,10 & = 0 \\
2 & + 1\,032\, a & + 1\,086\, c + & & \Delta\vartheta + 2\;\;96 & = 0 \\
3 & + 1\,031\, a & + 1\,085\, c + & & \Delta\vartheta + 3\;\;17 & = 0 \\
4 & + 1\,135\, a & + 1\,156\, c + & & \Delta\vartheta + 3\;\;19 & = 0 \\
5 & - 0\,732\, a & + 2\,056\, c + & 0\,707 & \Delta\vartheta + 0\;\;15 & = 0 \\
6 & - 0\,732\, a' & - 2\,056\, c + & 0\,707 & \Delta\vartheta - 0\;\;97 & = 0
\end{array}
$$

$$
\begin{array}{rl}
7 & +\,2\,606\,a' + 2\,993\,c + \Delta\vartheta + 2\ 22 = 0 \\
8 & +\,1\,879\,a' + 1\,984\,c + \Delta\vartheta + 1\ 91 = 0 \\
9 & -\,1\,322\,a' - 3\,319\,c + \Delta\vartheta - 0\ 58 = 0 \\
10 & -\,0\,229\,a' - 1\,802\,c + \Delta\vartheta + 0\ 58 = 0 \\
11 & +\,2\,264\,a' + 2\,508\,c + \Delta\vartheta + 2\ 18 = 0 \\
12 & +\,2\,016\,a' + 2\,166\,c + \Delta\vartheta + 1\ 94 = 0
\end{array}
$$

where the 5th and 6th equations have been multiplied by $\sqrt{\tfrac{1}{2}}$, thus giving each but one-half the weight of an ordinary observation, because the star was observed on but half the threads *

The normal equations are

$$
\begin{array}{rrrrr}
3\,998\,a + & 0 + & 2\,325\,c + & 2\,894\,\Delta\vartheta + & 10\,283 = 0 \\
0 & +\,21\,848\,a' + & 27\,881\,c + & 6\,697\,\Delta\vartheta + & 19\,569 = 0 \\
2\,325\,a + & 27\,881\,a' + & 51\,969\,c + & 9\,153\,\Delta\vartheta + & 36\,352 = 0 \\
2\,894\,a + & 6\,697\,a' + & 9\,153\,c + & 11\,000\,\Delta\vartheta + & 19\,090 = 0
\end{array}
$$

from which we find

$$
\begin{aligned}
a &= -\,1^{s}\,681 \\
a' &= -\,0\ 083 \\
c &= -\,0\ 423 \\
\Delta\vartheta &= -\,0\ 891 \text{ with the weight } p = 6\,775
\end{aligned}
$$

This example is instructive in several respects The instrument was reversed upon the star B A C 6836 for the purpose of deducing the value of c But, upon the supposition that the azimuth remained unchanged during the reversal, we find $c = -\,0^{s}\,267$ The danger of disturbing the instrument in reversing the axis is, of course, greater with small instruments, and always requires great caution Again, the observer neglected to observe the level immediately before and after the reversal, the values of b given in the table being inferred from observations taken at the time of the transits of Nos 1, 7, and 11 If the level had been observed moie frequently, as it should be, the disturbance of the azimuth might have been suggested to the observer himself, who, however, appears not to have suspected it

But we shall obtain still further instruction from this example by substituting the values of a, a', c, $\Delta\vartheta$ in the original equations of condition The residuals v will exhibit to us the anomalous observations. We find:

* To proceed more accurately, we should have computed, by (129), the weights of the *four* defective observations, the 2d, 4th, 5th, and 6th We should have found the weights 0 95, 0 89, 0 82, 0 71 respectively

No	v	vv
1	$+0.302$	0 0912
2	$-0\ 125$	0156
3	$+0\ 086$	0074
4	$-0\ 098$	0096
5	$-0\ 120$	0144
6	$-0\ 669$	4475
7	$-0\ 153$	0234
8	$+0\ 024$	0006
9	$+0\ 043$	0018
10	$+0\ 470$	2209
11	$+0\ 040$	0016
12	$-0\ 034$	0012

$$[vv] = 0\ 8352$$

Hence, the number of observations being denoted by $m = 12$, and the number of unknown quantities in our equations by $\mu = 4$, we have the mean error of an observation of the weight unity,

$$\varepsilon = \sqrt{\frac{[vv]}{m-\mu}} = 0.323$$

The large residuals of Nos 6 and 10 point them out as probably anomalous, but, before rejecting them, we will apply PEIRCE's Criterion Since Table X is adapted only to the cases of one and two unknown quantities, we shall have to employ Table X A Commencing with the hypothesis of but one doubtful observation, we assume for a first trial $x = 1\ 5$

		1st Approx	2d Approx
$m = 12,\ \mu = 4,\ n = 1$	x	1 5	1 78
Table X A	$\log T$	8 5051	8 5051
" "	$\log R$	9 3973	9 3464
	$\log \dfrac{T}{R}$	9 1078	9 1587
$\dfrac{2n}{m-n} = \dfrac{2}{11}$	$\log \lambda^2 = \log\left(\dfrac{T}{R}\right)^{\frac{2}{11}}$	9 8378	9 8470
	$1-\lambda^2$	0 3117	0 2970
$\dfrac{m-\mu-n}{n} = 7,\ x^2 - 1 = 7(1-\lambda^2)$		2 1819	2 0790
	x^2	3 1819	3 0790
	x	1 78	1 76

$$x\varepsilon = 0.568$$

The residual 0.669 surpasses the limit 0".568, and hence the 6th observation is to be rejected We must then pass to the hypothesis of two doubtful observations, for which we commence by assuming $x = 1.5$, and then with $n = 2$ we find $x = 1.49$, $x\varepsilon = 0''.481$ Hence the 10th observation is *not* to be rejected Thus the only observation to be rejected as anomalous is the 6th, and our hypothesis of a disturbed state of the instrument produced by reversal is confirmed

If we now form normal equations from the remaining eleven equations of condition, we shall find the values of the unknown quantities to be

$$\begin{aligned} a &= -1^s.636 \\ a' &= -0.092 \\ c &= -0.367 \\ \Delta\vartheta &= -0.999 \text{ with weight } p = 5.963 \end{aligned}$$

and these values substituted in the equations of condition give the residuals and mean errors as follows:

No	v	$[vv]$
1	$+0^s.276$	0.0762
2	-0.126	0159
3	$+0.086$	0074
4	-0.089	0079
5	-0.114	0130
7	-0.120	0144
8	$+0.010$	0001
9	-0.239	0571
10	$+0.264$	0697
11	$+0.051$	0026
12	-0.040	0016
$m - \mu = 7$		$[vv] = 0.2659$

$$\varepsilon = \sqrt{\frac{[vv]}{m-\mu}} = 0^s.195$$

The 10th observation is now well represented, and the Criterion does not reject any of them

The mean error of $\Delta\vartheta$ is

$$\varepsilon_0 = \frac{\varepsilon}{\sqrt{p}} = 0^s.08$$

and the probable error $0^s.05$.

Hence we have, finally, the chronometer correction at 0^h,

$$\Delta T_0 = \vartheta + \Delta\vartheta = -3^h\, 25^m\, 1^s{\cdot}00 \pm 0^s{\cdot}05$$

THE TRANSIT INSTRUMENT IN ANY VERTICAL PLANE

167 The formulæ (78) and (79) apply to any position of the instrument When the instrumental constants m and n are known, or when a and b are given, from which m and n can be found by (78), the formula (79) determines the apparent east hour angle τ of the observed object at the time of its transit over any given thread whose distance from the collimation axis is c The constants are found by combining observations of stars near to and remote from the pole, as will be illustrated hereafter When the transits over several threads have been observed, each may be separately reduced by the general formulæ, but it is necessary also to have the means of reducing them all to a common instant I shall, therefore, here consider the most general case of an observation of the moon's limb on any given thread, and investigate the formula for reducing it to the middle thread, or to the collimation axis of the instrument This general formula will be applicable to any other object which has a proper motion and a sensible diameter Let

$\Theta =$ the sidereal time of the observed transit of the moon's limb over the given thread,

$i =$ the equatorial interval of the thread from the middle thread,

$\alpha, \delta =$ the true R A and decl of the moon's centre at the time Θ,

$\alpha', \delta' =$ the apparent R A and declination,

$s =$ the moon's geocentric semidiameter,

$s' =$ the moon's apparent semidiameter

At the instant the moon's limb touches the thread whose distance from the middle thread is i, the centre of the moon is at the distance $i \pm s'$ from the middle thread, and, consequently, at the distance $c + i \pm s'$ from the collimation axis of the telescope The apparent east hour angle of the moon's centre at this instant is

$$\tau = \alpha' - \Theta$$

Putting then $c + i \pm s'$ for c and $\alpha' - \Theta$ for τ in (79), we have

$$\sin(c + i \pm s') = -\sin n \sin\delta' - \cos n \cos\delta' \sin(\Theta - \alpha' + m)$$
$$= -\sin n \sin\delta' - \cos n \cos m \cos\delta' \sin(\Theta - \alpha')$$
$$- \cos n \sin m \cos\delta' \cos(\Theta - \alpha')$$

where the apparent declination and right ascension are employed, since it is the moon's apparent place which is observed. To introduce the geocentric quantities, let

$\pi =$ the moon's equatorial horizontal parallax,
$\rho, \varphi' =$ the earth's radius and reduced latitude of the place of observation,
$\varDelta, \varDelta' =$ the moon's distance from the centre of the earth and the observer respectively,

then, putting

$$f = \frac{\varDelta'}{\varDelta}$$

we find from Vol. I, equations (132),

$$f \cos\delta' \sin(\Theta - \alpha') = \cos\delta \sin(\Theta - \alpha)$$
$$f \cos\delta' \cos(\Theta - \alpha') = \cos\delta \cos(\Theta - \alpha) - \rho \sin\pi \cos\varphi'$$
$$f \sin\delta' = \sin\delta - \rho \sin\pi \sin\varphi'$$

Substituting these values, we obtain

$$f(c + i \pm s') \sin 1'' = -\sin n \sin\delta - \cos n \cos\delta \sin(\Theta - \alpha + m)$$
$$+ \rho \sin\pi \sin\varphi' \sin n + \rho \sin\pi \cos\varphi' \cos n \sin m \tag{132}$$

The right ascension and declination are, however, variable, and we should introduce into the formula their values for some assumed epoch. Let this epoch be the sidereal time, Θ_0, which is the common instant to which the observations on the several threads are to be reduced. Let

$\alpha_0, \delta_0 =$ the true right ascension and declination at the time Θ_0,
$\Delta\alpha =$ the increase of the right ascension in one minute of mean time,
$\Delta\delta =$ the increase of the declination (towards the north) in one minute of mean time,

and put

$$I = \Theta_0 - \Theta = \text{the required reduction,}$$

$$\lambda = \frac{\Delta\alpha}{60\ 164} = \text{the increase of } \alpha \text{ in } 1^s \text{ of sidereal time}$$

$$\lambda' = \frac{\Delta\delta}{60\ 164} = \quad \text{"} \quad \delta \quad \text{"} \quad \text{"}$$

then, if I is expressed in seconds of arc, we have

$$\alpha = \alpha_0 - \lambda I, \qquad \delta = \delta_0 - \tfrac{1}{15}\lambda' I$$

$$\Theta - \alpha = \Theta_0 - \alpha_0 - (\Theta_0 - \Theta) + (\alpha_0 - \alpha) = \Theta_0 - \alpha_0 - (1 - \lambda) I$$

$$\sin(\Theta - \alpha + m) = \sin(\Theta_0 - \alpha_0 + m) \\ - (1 - \lambda)\cos[\Theta_0 - \alpha_0 + m - \tfrac{1}{2}(1 - \lambda) I]\ 2 \sin \tfrac{1}{2} I$$

[in which $(1 - \lambda)\sin\frac{1}{2} I$ is put for $\sin\frac{1}{2}(1 - \lambda) I$]

$$\sin\delta = \sin\delta_0 - \frac{\lambda'}{15}\cos\delta_0\ \ 2\sin\tfrac{1}{2} I$$

$$\cos\delta = \cos\delta_0 + \frac{\lambda'}{15}\sin\delta_0\ \ 2\sin\tfrac{1}{2} I$$

Substituting these values, our formula becomes (omitting a term multiplied by the exceedingly small quantity $\frac{1}{15}\lambda'\sin^2\frac{1}{2} I$)

$$\begin{aligned} f(c + i \pm s')\sin 1'' = &- \sin n \sin\delta_0 - \cos n \cos\delta_0 \sin(\Theta_0 - \alpha_0 + m) \\ &+ \rho \sin\pi \sin\varphi' \sin n + \rho \sin\pi \cos\varphi' \cos n \sin m \\ &+ (1 - \lambda)\cos n \cos\delta_0 \cos[\Theta_0 - \alpha_0 + m - \tfrac{1}{2}(1 - \lambda) I]\, 2\sin\tfrac{1}{2} I \\ &+ \tfrac{1}{15}\lambda'[\sin n \cos\delta_0 - \cos n \sin\delta_0 \sin(\Theta_0 - \alpha_0 + m)]\, 2\sin\tfrac{1}{2} I \end{aligned} \tag{133}$$

In this formula, we may consider I as the only quantity which varies with the time, for, although f, s', and π vary slightly, their variations will not usually be sensible, or, if sensible for a single thread, their effect will disappear when the epoch is nearly the mean of all the observed times

If now Θ_0 is the time of transit of the moon's centre over the great circle of the instrument, this formula gives

$$\left.\begin{aligned} 0 = &- \sin n \sin\delta_0 - \cos n \cos\delta_0 \sin(\Theta_0 - \alpha_0 + m) \\ &+ \rho\sin\pi\sin\varphi'\sin n + \rho\sin\pi\cos\varphi'\cos n \sin m \end{aligned}\right\} \tag{134}$$

Subtracting this from (133), and, for brevity, putting

$$\begin{aligned} t &= \Theta_0 - \alpha_0 + m \\ R &= \sin n \cos\delta_0 - \cos n \sin\delta_0 \sin t \end{aligned}$$

we find

$$2 \sin \tfrac{1}{2} I = \frac{f (c + i \pm s') \sin 1''}{(1 - \lambda) \cos n \cos \delta_0 \cos [t - \frac{1}{2} (1 - \lambda) I] + \frac{1}{15} \lambda' R}$$

This is equivalent to the formula given by SAWITSCH (*Pract Astron*, Vol I p 303), but he has not observed that the expression for R may be put under a much more simple form In so small a term as $\frac{1}{15}\lambda' R$, we need not consider the effect of the parallax upon the factor R; but when we neglect the parallax we have, by (134),

$$0 = - \sin n \sin \delta_0 - \cos n \cos \delta_0 \sin t$$

Multiplying this by $\sin \delta_0$, and subtracting the product from $R \cos \delta_0$, we find

$$R \cos \delta_0 = \sin n, \qquad \text{or} \qquad R = \sin n \sec \delta_0$$

It is also to be observed that by the formula (246) of Vol I. we have

$$fs' = s = \text{the true semidiameter}$$

Hence our formula becomes

$$2 \sin \tfrac{1}{2} I = \frac{f (c + i) \sin 1'' \pm s \sin 1''}{(1 - \lambda) \cos n \cos \delta_0 \cos [t - \frac{1}{2} (1 - \lambda) I] + \frac{1}{15} \lambda' \sin n \sec \delta_0} \qquad (135)$$

or, when I is small, as it usually is,

$$I = \frac{f (c + i) \pm s}{(1 - \lambda) \cos n \cos \delta_0 \cos [t - \frac{1}{2} (1 - \lambda) I] + \frac{1}{15} \lambda' \sin n \sec \delta_0} \qquad (135^*)$$

This formula, then, gives the reduction of the observed time of transit of the moon's limb over any given thread to the time of transit of the moon's centre over the great circle of the instrument

If we omit s in the numerator of the second member, I becomes the reduction to the time of transit of the limb over the great circle of the instrument

If we omit $fc \pm s$, I becomes the reduction to the time of transit of the limb over the middle thread

The factor f is determined rigorously by (137), Vol I ; but it generally suffices to take

$$f = \frac{\sin \zeta}{\sin \zeta'}$$

which is very nearly exact, according to (101) of Vol I The finder of the instrument will give the apparent zenith distance ζ', and the difference between this and the true zenith distance ζ will be found with sufficient accuracy by the formula

$$\sin(\zeta' - \zeta) = \rho \sin \pi \sin(\zeta' - \gamma)$$

in which, a being the azimuth constant of the instrument,

$$\gamma = (\varphi - \varphi') \cos a$$

or, very nearly,

$$\gamma = (\varphi - \varphi') \cos n \cos m$$

For the sun or a planet we can always put $\lambda' = 0$ and $\zeta = \zeta'$, and the formula becomes

$$I = \frac{c + i \pm s}{(1 - \lambda) \cos n \cos \delta_0 \cos(t - \frac{1}{2} I)} \tag{136}$$

For a fixed star, we further put $\lambda = 0$, $s = 0$, $t = \Theta_0 - \alpha + m$, and the formula becomes for stars near the pole,

$$2 \sin \tfrac{1}{2} I = \frac{(c + i) \sin 1''}{\cos n \cos \delta \cos(t - \frac{1}{2} I)} \tag{137}$$

and for other stars,

$$I = \frac{c + i}{\cos n \cos \delta \cos(t - \frac{1}{2} I)} \tag{137*}$$

In all cases, we must carefully observe the sign of I in the denominator of the second member I will be negative when the observed time is later than the time to which the reduction is made, and then $-\frac{1}{2} I$ will be essentially positive An approximate value of I must first be found by neglecting I in the second member, and then a more precise value by the complete formula

If the azimuth a and the level b are given, m and n must first be found by (78), in which, however, we may usually neglect b when our object is merely to reduce the several threads to a common instant.

168 For a fixed star, another formula has been given by HANSEN We have

$$\begin{aligned}\sin(c + i) &= -\sin n \sin \delta - \cos n \cos \delta \sin(t - I) \\ &= -\sin n \sin \delta - \cos n \cos \delta \sin t \cos I + \cos n \cos \delta \cos t \sin I\end{aligned}$$

If the reduction is made to the collimation axis, we have

$$0 = -\sin n \sin \delta - \cos n \cos \delta \sin t$$

which, subtracted from the above, gives

$$\sin (c + i) = 2 \cos n \cos \delta \sin t \sin^2 \tfrac{1}{2} I + \cos n \cos \delta \cos t \sin I$$

whence

$$\sin I = \frac{\sin (c + i)}{\cos n \cos \delta \cos t} - 2 \tan t \sin^2 \tfrac{1}{2} I \qquad (13$$

which is a rigorous formula We see also that t may be four by the formula

$$\sin t = -\tan n \tan \delta \qquad (13$$

169. *To deduce the moon's right ascension from an observed tran in any given position of the instrument*—We first find the clock tin of transit of the moon's centre over the great circle of tl instrument, from each thread, by applying to the observed tin the reduction given by the formula (135) Let T_0 be the mea of the resulting times, and ΔT_0 the corresponding correction c the clock; then we have $\Theta_0 = T_0 + \Delta T_0$, and from (134) we dedu

$$\sin (\Theta_0 - \alpha_0 + m) = -\tan n \tan \delta_0 + \rho \sin \pi \left(\frac{\sin \varphi' \tan n + \cos \varphi' \sin m}{\cos \delta_0} \right) \quad (14$$

in which α_0 and δ_0 are the true right ascension and declinatio at the sidereal time Θ_0.

If it is preferred, we may first find the apparent right ascen sion by the formula

$$\sin (\Theta_0 - \alpha_0' + m) = -\tan n \tan \delta_0'$$

and deduce the true right ascension by applying the paralla computed by Art. 102, Vol. I, but it will then be necessary t compute the apparent declination δ_0'

It will be easy to deduce from (140) the formula for the cas where the instrument is in the meridian, which has already bee given in Art. 154.

The constants m and n, above supposed to be known, may b found from the transits of two stars as in the next article.

FINDING THE TIME WITH A PORTABLE TRANSIT INSTRUMENT OUT OF THE MERIDIAN

170 The number of Nautical Almanac stars near the pole is so small, that the observer in the field, when pressed for time, cannot always wait for their transits over the meridian, and must then either employ catalogue stars whose places are not so well determined, or have recourse to extra-meridian observations If the transit instrument is mounted so as to be readily revolved in azimuth and clamped in any assumed position (as is the case with the "universal instruments"), it may be directed at once to a fundamental star near the pole, and then, its rotation axis being levelled, its collimation axis will describe a vertical circle not far from the meridian The transit of any star over this circle being observed, the general equations of Art 123 will enable us to find the hour angle of this star, and hence the time, when we have determined the constants m and n for the assumed position of the instrument

The stars best adapted for the purpose in the northern hemisphere are *Polaris* (*α Ursæ Minoris*) and *δ Ursæ Minoris*, one of these being always near the meridian when the other is most remote from it, and it will be advisable always to employ that which is nearest to the meridian In the southern hemisphere, the best star is *σ Octantis*, which is less than 1° from the pole; but, as it is of the 6th magnitude, it may be necessary, with small instruments, to use either *β Hydri* or *β Chamæleontis*

To take the observation, make the axis approximately level, and turn the telescope upon the circum-polar star The star moving very slowly, set the instrument, so that a few minutes must elapse before the star will cross the middle thread During this interval, apply the spirit level and determine the constant b Observe the transit of the star over the middle thread by the chronometer The instrument now remaining clamped in azimuth, revolve the telescope upon its axis, and observe the transit of an equatorial star over all the threads Then determine the constant b again, and employ the mean of its two values.

In order to eliminate an error of collimation, the rotation axis is to be reversed, and another similar observation is to be taken, the instrument being set at a new azimuth slightly in advance of the polar star as before Each observation of a pair of stars must, of course, be separately reduced We may, however,

combine each transit of the polar star with the transits of several equatorial stars.

The collimation constant should have been made as small as possible before the observations, but, in any case, we shall assume that its value is known

To reduce the observations, we must first find the constants which determine the position of the instrument For this purpose, we use only the observations on the middle thread Let then T' and T be the observed chronometer times of transit of the polar and equatorial star respectively over the middle thread reduced for rate to an assumed time T_0; and let ΔT_0 be the chronometer correction at this time, α', α, the right ascensions, δ', δ the declinations, τ', τ, the east hour angles, or reductions to the meridian; $90° - m$, and n, the hour angle and declination of the point in which the rotation axis produced towards the west meets the celestial sphere; c the collimation constant then we have, by (79),

$$\left.\begin{aligned} \sin(\tau - m) &= \tan n \tan \delta + \sin c \sec n \sec \delta \\ \sin(\tau' - m) &= \tan n \tan \delta' + \sin c \sec n \sec \delta' \end{aligned}\right\} \tag{141}$$

in which we have

$$\begin{aligned} \tau &= \alpha - (T + \Delta T_0) \\ \tau' &= \alpha' - (T' + \Delta T_0) \end{aligned}$$

If we could put $c = 0$, these equations would give us m and n by a very simple transformation, but, retaining c, we can still reduce them to the form they would have if c were zero * For this purpose, let m' and n' be approximate values of m and n, determined by the conditions

$$\begin{aligned} \sin(\tau - m') &= \tan n' \tan \delta \\ \sin(\tau' - m') &= \tan n' \tan \delta' \end{aligned}$$

from which we shall find n' and then the correction to reduce it to n. Put

$$\gamma = \tfrac{1}{2}(\tau' - \tau) \qquad\qquad \lambda = \tfrac{1}{2}(\tau' + \tau) - m'$$

then γ is known from the observation, since we have

$$\gamma = \tfrac{1}{2}[\alpha' - T' - (\alpha - T)] \tag{142}$$

* This transformation is given by HANSEN, *Astr Nach*, Vol XLVIII p 115

We have then

$$\lambda - \gamma = \tau - m' \qquad \lambda + \gamma = \tau' - m'$$

and hence

$$\sin(\lambda - \gamma) = \tan n' \tan \delta \qquad \sin(\lambda + \gamma) = \tan n' \tan \delta'$$

the sum and difference of which give

$$2 \sin \lambda \cos \gamma \cos \delta \cos \delta' = \tan n' \sin(\delta' + \delta)$$
$$2 \cos \lambda \sin \gamma \cos \delta \cos \delta' = \tan n' \sin(\delta' - \delta)$$

If, therefore, we make

$$\left.\begin{aligned} L \sin \lambda &= \frac{\sin(\delta' + \delta)}{\cos \gamma} \\ L \cos \lambda &= \frac{\sin(\delta' - \delta)}{\sin \gamma} \end{aligned}\right\} \tag{143}$$

these equations will give us λ and L, and then we shall have

$$\tan n' = \frac{2 \cos \delta \cos \delta'}{L} \tag{144}$$

It is to be observed that α' is always to be regarded as greater than T', and in finding γ by (142) the difference $\alpha' - T'$ is to be found by increasing α' by 24^h when necessary, but $\alpha - T$ will be positive or negative. This makes γ less than 180°, and, since $\lambda + \gamma (= \tau' - m')$ must be less than 360°, it follows that λ must also be less than 180°. Hence, L will have the same sign as $\cos \gamma$, and n' will be negative when $\gamma > 90°$.

Now, we have $\tau - m = \tau - m' + (m' - m)$, and, since $m' - m$ is very small,

$$\sin(\tau - m) = \sin(\tau - m') + \sin(m' - m) \cos(\tau - m')$$

which, substituted in the first equation of (141), gives

$$\begin{aligned} \sin c = \sin(\tau - m') \cos n \cos \delta &- \sin n \sin \delta \\ + \sin(m' - m) \cos(\tau - m') &\cos n \cos \delta \end{aligned}$$

To simplify this, let us put

$$\sin w = \frac{\sin \delta}{\cos n'}$$

from which and the equation

$$\sin(\tau - m') = \tan n' \tan \delta$$

there follows also

$$\cos w = \cos(\tau - m') \cos \delta$$

for, if we add together the squares of the first and third of these equations, the sum is reduced by means of the second to the identical equation $1 = 1$ By substituting the values of $\sin(\tau - m')$, $\cos(\tau - m')$, and $\sin \delta$, which these equations give, in the expression for c, it becomes

$$\sin c = \sin(n' - n) \sin w + \sin(m' - m) \cos n \cos w$$

In the same manner, if for the polar star we take

$$\sin w' = \frac{\sin \delta'}{\cos n'} \qquad \cos w' = \cos(\tau' - m') \cos \delta'$$

we shall have

$$\sin c = \sin(n' - n) \sin w' + \sin(m' - m) \cos n \cos w'$$

Combining these two values of $\sin c$, we have

$$\sin c (\cos w - \cos w') = \sin(n' - n) \sin(w' - w)$$

whence

$$\sin(n' - n) = \sin c \, \frac{\sin \frac{1}{2}(w' + w)}{\cos \frac{1}{2}(w' - w)}$$

or, putting $n' - n = \nu$,

$$\left.\begin{aligned} \nu &= c\,\frac{\sin \frac{1}{2}(w' + w)}{\cos \frac{1}{2}(w' - w)} \\ n &= n' - \nu \end{aligned}\right\} \quad (145)$$

The angles w' and w here required are found by the equations

$$\tan w' = \frac{\tan \delta'}{\cos(\lambda + \gamma) \cos n'} \qquad \tan w = \frac{\tan \delta}{\cos(\lambda - \gamma) \cos n'} \quad (146)$$

observing that for a negative value of $\tan w'$, w' is to be taken in the 2d quadrant, but that for a negative value of $\tan w$, w is to be taken numerically less than 90°, and with the negative sign.

To find m, we have, by eliminating a from (78),

$$\sin m \cos n \cos \varphi + \sin n \sin \varphi = \sin b$$

whence

$$\sin m = -\tan n \tan \varphi + \frac{\sin b}{\cos n \cos \varphi}$$

If then we take

$$\left.\begin{aligned} \sin\mu &= -\tan n \tan\varphi \\ \beta &= \frac{b}{\cos n \cos\mu \cos\varphi} \\ m &= \mu + \beta \end{aligned}\right\} \quad (147)$$

we have

The constants being thus found, we proceed to find the correction of the chronometer by the equatorial star We must first reduce the transits over the several threads to the collimation axis, which may here be done by the formula (138), omitting the last term, which is insensible when the instrument is so near the meridian as we here suppose it to be If, therefore, we first find t by the formula

$$\sin t = -\tan n \tan\delta \quad (148)$$

and then put

$$F = \cos n \cos\delta \cos t$$

we must apply to the observed time on each thread the correction

$$I = \frac{i}{F} \quad (149)$$

(where i is the equatorial interval of a thread from the middle thread), and to the mean of the results we must apply also the correction $\frac{c}{F}$ to reduce to the collimation axis Let the resulting time, reduced for rate to the assumed epoch T_0, be denoted by (T) Then, if Θ_0 is the true sidereal time at the same instant, we have

$$\Theta_0 = (T) + \Delta T_0$$

and, by Art. 167,

$$t = \Theta_0 - \alpha + m$$

whence we derive*

$$\Delta T_0 = \alpha - (T) + t - m \quad (150)$$

If we wish to take into account the diurnal aberration, we must add to the right ascension of each star the correction $0^s.021 \cos\varphi \sec\delta \cos\tau$

171 In the above, we have supposed c to be given To investigate the effect of an error in the assumed value of c, let $c + \Delta c$

* It is easily seen that the general formula (150) reduces to HANSEN's formula (86) when the instrument is in the meridian

be its true value, then the correction of n corresponding to Δc is, by (145),

$$\Delta n = -\Delta c \frac{\sin \frac{1}{2}(w' + w)}{\cos \frac{1}{2}(w' - w)}$$

and, by differentiating the expressions (147), (148), and (149), we find the corresponding corrections of m, t, and I to be

$$\Delta m = -\Delta n \frac{\tan \varphi}{\cos^2 n \cos m} = \Delta c \frac{\sin \frac{1}{2}(w' + w) \tan \varphi}{\cos \frac{1}{2}(w' - w) \cos^2 n \cos m}$$

$$\Delta t = -\Delta n \frac{\tan \delta}{\cos^2 n \cos t} = \Delta c \frac{\sin \frac{1}{2}(w' + w) \tan \delta}{\cos \frac{1}{2}(w' - w) \cos^2 n \cos t}$$

$$\Delta I = \frac{\Delta c}{\cos \delta \cos n \cos t}$$

The correction of the quantity $(T) - t + m$ will be composed of the corrections of I (by which (T) is obtained), of m, and of t Denoting the whole correction by $\Delta\tau$, we have

$$\Delta\tau = \Delta I - \Delta t + \Delta m$$

Substituting the values of the corrections, we find

$$\Delta\tau = \frac{\Delta c}{\cos n}\left[\frac{1}{\cos w} - \frac{\sin \frac{1}{2}(w' + w) \tan w}{\cos \frac{1}{2}(w' - w)} + \frac{\sin \frac{1}{2}(w' + w) \tan \varphi}{\cos \frac{1}{2}(w' - w) \cos n \cos m}\right]$$

By observing that $\frac{1}{2}(w' - w) = \frac{1}{2}(w' + w) - w$, the first two terms within the parentheses become

$$\frac{\cos \frac{1}{2}(w' - w) - \sin \frac{1}{2}(w' + w) \sin w}{\cos \frac{1}{2}(w' - w) \cos w} = \frac{\cos \frac{1}{2}(w' + w)}{\cos \frac{1}{2}(w' - w)}$$

whence

$$\Delta\tau = \frac{\Delta c}{\cos n \cos \frac{1}{2}(w' - w)}\left[\cos \frac{1}{2}(w' + w) + \sin \frac{1}{2}(w' + w) \frac{\tan \varphi}{\cos n \cos m}\right]$$

Finally, if we put

$$\tan \varphi' = \frac{\tan \varphi}{\cos n \cos m} \qquad (151)$$

the expression becomes*

$$\Delta\tau = \Delta c \frac{\cos [\frac{1}{2}(w' + w) - \varphi']}{\cos n \cos \varphi' \cos \frac{1}{2}(w' - w)} \qquad (152)$$

* As given by HANSEN, *Astr Nach*, Vol XLVIII p 120

If we denote the coefficient of Δc in this equation by C, and the true chronometer correction by ΔT, the first computed correction being (ΔT), we have

$$\Delta T = (\Delta T) - C\Delta c \tag{153}$$

For another observation in the reversed position of the axis the coefficient of Δc computed by (152) being denoted by C', and the computed chronometer correction by $(\Delta T')$, we have, since the sign of Δc is changed,

$$\Delta T = (\Delta T') + C'\Delta c \tag{154}$$

and, combining the two results, we can determine both ΔT and Δc If we have taken a number of stars in each position, we can treat all the equations of this kind by the method of least squares

172 The designation "equatorial star," in the preceding explanations, has been used to designate the star from which the chronometer correction has been deduced, but it is by no means necessary that this star should be very near the equator A star which passes near the zenith will be preferable, since an error in the determination of n will then have little or no effect upon the computed time

Example *—In 1843, August 17, at Cronstadt, latitude $\varphi = 59° 59' 5$, the following observations were taken The value of one division of the level was $0^s.113$ The correction for inequality of pivots was $p = + 0^s 14$ for *circle west* The equatorial intervals of the threads, numbered from the circle end of the axis, were

i_1	i_2	i_4	i_5
$+ 34^s 50$	$+ 18^s 74$	$- 16^s.14$	$33^s 33$

The assumed collimation constant was $c = - 0^s 33$ for *circle west*

The chronometer correction was approximately $\Delta T = + 40^s$, its losing rate, $1^s 72$, or $\delta T = + 1^s 72$ daily

* Sawitsch, *Pract Astron*, Vol I p 343

1st position of the instrument *Circle West*

		E	W
Level	Direct	− 12 0	+ 27 0
	Reversed	− 17 8	+ 21 2

Mean $B = + 4^d 6$

$B = + 0^s 52$
$p = + 0\ 14$
$b = + 0\ 66$

Transits observed with chronometer "Haut No 19"

Thread	I	II	III	IV	V
α Urs Min	—	—	$17^h\ 23^m\ 10^s\ 0$	—	—
β Draconis	$38^s\ 0$	$3^s\ 9$	17 28 35 0	$1^s\ 4$	$29^s\ 3$

		E	W
Level	Direct	− 18 0	+ 21 0
	Reversed	− 12 4	+ 26 8

Mean $B = + 4^d 35$

$B = + 0^s 49$
$p = + 0\ 14$
$b = + 0\ 63$

2d position *Circle East*

		E	W
Level	Direct	− 18 4	+ 21 0
	Reversed	− 17 4	+ 23 1

Mean $B = + 2^d 08$

$B = + 0^s 24$
$p = - 0\ 14$
$b = + 0\ 10$

Thread	V	IV	III	II	I
α Urs. Min	—	—	$17^h\ 52^m\ 45^s\ 5$	—	—
γ Draconis	$8^s\ 1$	$35^s\ 8$	17 55 1 4	$31^s\ 6$	$57^s\ 1$

		E	W
Level	Direct	− 16 2	+ 23 6
	Reversed	− 18 3	+ 21 5

Mean $B = + 2^d 65$

$B = + 0^s 30$
$p = - 0\ 14$
$b = + 0\ 16$

For the given date we find, from the Nautical Almanac,

	α	δ
α Urs Min	$1^h\ 3^m\ 45^s.70$	$88°\ 28'\ 24''.2$
β Draconis,	$17\ \ 26\ \ 55.73$	$52\ \ 25\ \ 25.5$
γ Draconis,	$17\ \ 53\ \ \ 0.35$	$51\ \ 30\ \ 51.0$

Computation of the observations, *circle west*.—We shall reduce the observed times for the chronometer rate to the common epoch $T_0 = 18^h$. To allow for the diurnal aberration, we take for the approximate times of the observation of *α Ursæ Minoris* and *β Draconis*, $17^h\ 24^m$ and $17^h\ 29^m$, which, subtracted from the respective right ascensions, give for their eastern hour angles, or the values of τ, $7^h\ 40^m$ and $-\ 0^h\ 2^m$, and hence the values of $0^s.021 \cos\varphi \sec\delta \cos\tau$ for the two stars are $-\ 0^s.17$ and $+\ 0^s.02$, which are to be added to the right ascensions. The corrected quantities are then:

$$
\begin{array}{llrrr}
\textit{α Urs Min} & \alpha' = & 1^h\ \ 3^m\ 45^s.53 & T' = 17^h\ 23^m\ \ 9^s.96 & \delta' = \ \ 88°\ 28'\ 24''.2 \\
\textit{β Draconis}, & \alpha\ = & 17\ \ 26\ \ 55.75 & T\ = 17\ \ 28\ \ 34.96 & \delta = \ \ 52\ \ 25\ \ 25.5 \\
 & \alpha' - T' = & 7\ \ 40\ \ 35.57 & & \delta' + \delta = 140\ \ 53\ \ 49.7 \\
 & \alpha - T = & -\ \ \ 1\ \ 39.21 & & \delta' - \delta = \ \ 36\ \ \ 2\ \ 58.7 \\
 & 2\gamma = & 7\ \ 42\ \ 14.78 & = 115°\ 33'\ 41''.7 & \\
 & & & \gamma = \ \ 57°\ 46'\ 50''.9 &
\end{array}
$$

Hence, by the formulæ (143) and (144),

$$
\begin{array}{lr}
\log\sin(\delta'+\delta) & 9.799833 \\
\log\cos\gamma & 9.726857 \\
\hline
\log L\sin\lambda & 0.072976 \\
\log\tan\lambda & 0.230618 \\
\lambda = & 59°\ 32'\ 39''.2 \\
 & \\
n' = & +\ 1°\ 21'\ 22''.8
\end{array}
\qquad
\begin{array}{lr}
\log\sin(\delta'-\delta) & 9.769736 \\
\log\sin\gamma & 9.927378 \\
\hline
\log L\cos\lambda & 9.842358 \\
\log\cos\lambda & 9.704899 \\
\log L & 0.137459 \\
\log 2\cos\delta'\cos\delta & 8.511783 \\
\hline
\log\tan n' & 8.374324
\end{array}
\qquad
\begin{array}{lr}
\log\cos\delta' & 8.425554 \\
\log\cos\delta & 9.785199 \\
\log 2 & 0.301030 \\
\hline
 & 8.511783
\end{array}
$$

By the formulæ (145) and (146),

$$
\begin{array}{lr}
\lambda + \gamma = & 117°\ 20' \\
\log\sec(\lambda+\gamma) & n0.3380 \\
\log\sec n' & 0.0001 \\
\log\tan\delta' & 1.5743 \\
\hline
\log\tan w' & n1.9124 \\
w' = & 90°\ 42' \\
\tfrac{1}{2}(w'+w) = & 71\ \ 35
\end{array}
\qquad
\begin{array}{lr}
\lambda - \gamma = & 1°\ 46' \\
\log\sec(\lambda-\gamma) & 0.0002 \\
\log\sec n' & 0.0001 \\
\log\tan\delta & 0.1138 \\
\hline
\log\tan w & 0.1141 \\
w = & 52°\ 27' \\
\tfrac{1}{2}(w'-w) & 19\ \ \ 8 \\
\log\sin\tfrac{1}{2}(w'+w) & 9.9772 \\
\log\sec\tfrac{1}{2}(w'-w) & 0.0247 \\
\log c & n0.6946 \\
\hline
\log\nu & n0.6965
\end{array}
$$

$$c = -\ 0^s.33 = -\ 4''.95$$

$$\nu = -\ 4.97$$

$$n' - \nu = n = +\ 1°\ 21'\ 27''.8$$

By the formulæ (147):

log (— tan n)	n8 374769		$b = +\ 0^s\ 645 = +\ 9''\ 68$	
log tan φ	0.238415		log b	0 9859
log sin μ	n8 613184		log sec n	0 0001
$\mu =$	$-\ 2°\ 21'\ \ 7''\ 0$		log sec μ	0 0004
$\beta =$	$+\ 19\ \ 4$		log sec φ	0 3009
$m =$	$-\ 2\ \ 20\ \ 47\ \ 6$		log β	1 2873

The constants of the instrument being thus found, we proceed to find the chronometer correction by β *Draconis* We first find t and the thread intervals by (148) and (149)

	log tan n	8 374769	log cos n	9 99988
$t = -\ 1°\ 45'\ 54''.6$	log tan δ	0 113823	log cos δ	9 78520
	log sin t	n8 488592	log cos t	9 99979
			log F	9 78487

	I	II	IV	V		
log ι	1 53782	1.27277	n1.20790	n1 52284	$c =$	$-0^s\ 33$
log I	1 75295	1 48790	n1 42303	n1 73797	log c	n9 518
I	$+\ 56\ 62$	$+\ 30^s.75$	$-\ 26^s.49$	$-\ 54^s\ 70$	log $\frac{c}{F}$	n9 733
					$\frac{c}{F} =$	$-0^s\ 54$

Applying these reductions, we have, for the time of passage over the middle thread, and the chronometer correction by (150),

	β *Draconis*
	$17^h\ 28^m\ 34^s.62$
	34 .65
	35 .00
	34 .91
	34 60
	17 28 34 76
$\frac{c}{F} =$	— 0 54
Red. for rate to 18^h =	— 0 04
$(T) =$	17 28 34 18
$\alpha =$	17 26 55 75
$\alpha - (T) =$	— 1 38 43
$\tau - m = +\ 0°\ 34'\ 53''\ 0 =$	+ 2 19 53
Chron. correction at $18^h = \Delta T_0 =$	+ 41 10

Computation of the observations, *circle east.*—This being in all respects similar to the above, we shall only put down the principal results The approximate hour angles (τ) of α *Ursæ Minoris* and γ *Draconis* are $7^h\ 10^m$ and $-\ 0^h\ 3^m$, whence the correction of the right ascensions for diurnal aberration are $-\ 0^s\ 12$ and $+\ 0^s\ 02$. Reducing the times for rate to 18^h, we find

α *Urs Min*	$\alpha' = 1^h\ 3^m\ 45^s\ 58$	$T' = 17^h\ 52^m\ 45^s\ 49$	$\delta' = 88°\ 28'\ 24'\ 2$
γ *Draconis*	$\alpha = 17\ \ 53\ \ \ 0\ 37$	$T = 17\ \ 55\ \ \ 1.39$	$\delta = 51\ \ 30\ \ 51\ .0$

whence

$\gamma = 54°\ \ 7'\ 38''\ 3$	$\lambda = 55°\ 55'\ 54''2$
$n' = +\ \ 1\ \ 26\ \ \ 2\ 5$	$c = +\ 0^s\ 33 = +\ 4''95$
$\lambda + \gamma = 110°\ \ 4'$	$\lambda - \gamma = 1°\ 48'$
$w' = 90\ \ 31$	$w = 51\ \ 32$
$\nu = +\ \ 5''\ 0$	
$n = +\ \ 1°\ 25'\ 57''\ 5$	$b = +\ 0^s\ 13 = +\ 1''95$
$\mu = -\ \ 2\ \ 28\ \ 54\ \ 7$	$\beta = +\ 3''\ 9$
$m = -\ \ 2\ \ 28\ \ 50\ \ 8$	
$t = -\ \ 1\ \ 48\ \ \ 9\ \ 6$	$\log F = 9\ 79366$

For the reductions of the threads for γ *Draconis*, we find

	V	IV	II	I	
I	$+\ 53^s\ 60$	$+\ 25^s\ 96$	$-\ 30^s\ 14$	$-\ 55^s\ 48$	$\dfrac{c}{F} = +\ 0^s\ 53$

and hence

	γ *Draconis*
Transit over middle thread $=$	$17^h\ 55^m\ \ 1^s\ 59$
$\dfrac{c}{F} =$	$+\ \ \ 0\ 53$
Red for rate to 18^h $=$	$-\ \ \ 0\ 01$
$(T) =$	$17\ \ 55\ \ \ 2\ 11$
$\alpha =$	$17\ \ 53\ \ \ 0\ 37$
$\alpha - (T) =$	$-\ \ \ 2\ \ \ 1\ 74$
$t - m =$	$+\ \ \ 2\ \ 42\ 75$
$\Delta T_0 =$	$+\ \ 41\ 01$

The mean value derived from the observations in both positions of the instrument is, therefore,

$$\Delta T_0 = +\ 41^s\ 06 \text{ at } 18^h$$

In general, however, unless the declinations of the two stars are nearly equal, the true value of ΔT_0 will not be the mean of the values found in the two positions, but we shall have to proceed as follows.

To estimate the effect of an error in the assumed value of c in this computation, we might here put $\varphi' = \varphi$ in (152), since n and m are here small, but, for the sake of illustration, we shall use the complete formulæ We find

	Circle West.		*Circle East*
$\varphi' =$	$60° \ 1'.2$		$60° \ 1'.4$
$\frac{1}{2}(w' + w) - \varphi' =$	$11 \quad 34$		$11 \quad 0$
$\log \cos [\frac{1}{2}(w' + w) - \varphi']$	9.9911		9.9919
$\log \sec \frac{1}{2}(w' - w)$	0.0247		0.0257
$\sec n$	0.0001		0.0001
$\sec \varphi'$	0.3013		0.3013
$\log C$	0.3172	$\log C'$	0.3190
	$C = + 2.075$		$C' = + 2.084$

Hence

$$\text{(Circle west)} \quad \Delta T_0 = + 41^s.10 - 2.075\,\Delta c$$
$$\text{(Circle east)} \quad \Delta T_0 = + 41.01 + 2.084\,\Delta c$$

whence

$$\Delta c = + \frac{0^s.09}{4.159} = + 0^s.0216$$

$$\text{(Circle west)} \quad \Delta T_0 = + 41^s.10 - 0^s.04 = + 41^s.06$$
$$\text{(Circle east)} \quad \Delta T_1 = + 41.01 + 0.05 = + 41.06$$

This result agrees with the mean value found before, because here the declinations of the stars were nearly equal, and the position of the instrument with respect to the meridian was nearly the same in both observations

As the value of c is often but imperfectly known, it will be best always to take a pair of stars in each position of the axis, and then to compute the two clock corrections upon the supposition of $c = 0$. The true correction will then be found by computing $C\Delta c$ as above, and the value of Δc will be the true value of c Thus, in the preceding example, if we had first taken $c = 0$, we should have found from β *Draconis* $(\Delta T) = + 40^s.42$, and from γ *Draconis* $(\Delta T') = + 41^s.70$, and, computing the coefficients C and C' as above, we should have had

$$\text{(Circle west)} \quad \Delta T_0 = + 40^s.42 - 2.075\,c$$
$$\text{(Circle east)} \quad \Delta T_0 = + 41.70 + 2.084\,c$$

whence

$$c = \frac{-1^s.28}{4.159} = - 0^s.308$$

$$\text{(Circle west)} \quad \Delta T_0 = + 40^s.42 + 0^s.64 = + 41^s.06$$
$$\text{(Circle east)} \quad \Delta T_0 = + 41.70 - 0.64 = + 41.06$$

APPLICATION OF THE METHOD OF LEAST SQUARES TO THE DETERMINATION OF THE TIME WITH A PORTABLE TRANSIT INSTRUMENT IN THE VERTICAL CIRCLE OF A CIRCUMPOLAR STAR

173. We here suppose the observations to be made essentially as directed in Art 170, with this difference, however, that we shall not restrict the observation of the star near the pole to its transit over the middle thread The instrument being brought near the vertical of a circumpolar star 1st, the transit of this star over *any one* of the threads is observed, 2d, the transits of a number of equatorial stars are observed, 3d, the axis of the instrument is reversed, and the transit of the polar star again observed over one thread; and 4th, the transits of a number of equatorial stars are observed The level is read for each star If, however, the circumpolar star has passed all the threads by the time the axis has been reversed, the azimuth of the instrument must be changed, so as to bring the star near a thread; then, clamping the instrument in azimuth, the transit over this thread will be observed, and also the transits of a set of equatorial stars as before In this case the observations, being made in two different vertical circles, must be separately computed according to the following method It is hardly necessary to observe that the observations of the equatorial stars may either precede or follow that of the circumpolar star, as may happen to be most convenient In this method, we form an equation of condition from the observation of each star, and all those for which the azimuth of the instrument is the same are combined by the method of least squares

Let c denote the collimation constant for the mean of the threads, and i the equatorial distance of a thread from the mean, then, τ denoting the hour angle of the star when observed on the thread, $i + c$ must be substituted for c in our fundamental equation (79); and, since this quantity is always sufficiently small, we shall put it in the place of its sine Thus, we have for each thread

$$c + i = - \sin n \sin \delta + \cos n \cos \delta \sin (\tau - m)$$

When several threads are observed, the mean of the observed times corresponds to that point of the field which we call the mean of the threads only when the instrument is in the meridian. When the instrument is not in the meridian, two methods of procedure offer themselves The first is that which has been used in the preceding articles, and consists in reducing each thread

either to the middle or the mean thread by means of the computed intervals. But to compute these intervals we must, as has been seen, know the position of the instrument The second method, which we owe to BESSEL, is not only more simple in practice, but is wholly independent of the position of the instrument, and, as it will be useful both in the present problem and in that of finding the latitude by transits over the prime vertical, I shall treat of it here

If we denote the number of observed threads by q, we have q equations of the above form, i and τ being different in each The mean of these equations is

$$c + \frac{1}{q}\Sigma i = -\sin n \sin \delta + \cos n \cos \delta \frac{1}{q} \Sigma \sin (\tau - m)$$

where Σ is the usual summation sign Now let

$T =$ the mean of the observed times on the several threads,
$T - I =$ the observed time on any thread;

then I is the interval found by subtracting each observed time from the mean of all, and, consequently, the algebraic sum of all these intervals is zero. Also let

$$\vartheta = \text{the clock correction,}$$
$$t = \alpha - (T + \vartheta)$$

then for each thread we have

$$\tau = \alpha - (T - I + \vartheta) = t + I$$

$$\sin (\tau - m) = \sin (t - m + I) = \sin (t - m) \cos I + \cos (t - m) \sin I$$

$$\frac{1}{q} \Sigma \sin (\tau - m) = \sin (t - m) \frac{1}{q} \Sigma \cos I + \cos (t - m) \frac{1}{q} \Sigma \sin I$$

Let k and $\varkappa$ be determined by the conditions

$$\frac{1}{k} \cos \varkappa = \frac{1}{q} \Sigma \cos I$$
$$\frac{1}{k} \sin \varkappa = -\frac{1}{q} \Sigma \sin I$$

then we have

$$\frac{1}{q} \Sigma \sin (\tau - m) = \frac{1}{k} \sin (t - \varkappa - m)$$

Hence, putting

$$\left.\begin{aligned} \tau_1 &= t - \varkappa = \alpha - (T + \varkappa + \vartheta) \\ i_0 &= \frac{1}{q}\,\Sigma i \end{aligned}\right\} \quad (155)$$

our equation becomes

$$c + i_0 = -\sin n \sin \delta + \frac{\cos n \cos \delta \sin (\tau_1 - m)}{k}$$

Thus, $\varkappa$ and k being found, we find τ_1 by using the corrected time $T + \varkappa$ instead of T, as in (155), and then this single equation represents the mean of the q equations We may bring this equation still nearer in form to that for each thread, by substituting

$$\gamma \cos \delta_1 = \frac{1}{k} \cos \delta$$

$$\gamma \sin \delta_1 = \sin \delta$$

which give

$$\frac{c + i_0}{\gamma} = -\sin n \sin \delta_1 + \cos n \cos \delta_1 \sin (\tau_1 - m) \qquad (156)$$

where γ is so nearly equal to unity (as will presently appear) that, as the divisor of the small term $c + i_0$, it may usually be omitted Thus, the mean equation is precisely of the form for one thread, when we use both a corrected mean time and a corrected declination The quantities $\varkappa$ and δ_1, or else $\varkappa$ and $\log k$, are readily found by the aid of tables such as Tables VIII and VIII A at the end of this volume, the construction of which is as follows The equations which determine k and $\varkappa$ may be written thus

$$\frac{1}{k} \cos \varkappa = 1 - \frac{1}{q}\, \Sigma\, 2 \sin^2 \tfrac{1}{2} I$$

$$\frac{1}{k} \sin \varkappa = \frac{1}{q}\, \Sigma (I - \sin I)$$

for, since $\Sigma I = 0$, this last equation is the same as the one before given But the quantity $I - \sin I$ is of the order I^3, and therefore extremely small, so that we may put $\cos \varkappa = 1$, and hence

$$\frac{1}{k} = 1 - \frac{1}{q}\, \Sigma\, 2 \sin^2 \tfrac{1}{2} I$$

$$\varkappa = \frac{1}{q}\, \Sigma (I - \sin I)$$

and since

$$\tan \delta_1 = k \tan \delta$$

we have*

$$\delta_1 = \delta + \frac{k-1}{k+1} \frac{\sin 2\delta}{\sin 1''} + \left(\frac{k-1}{k+1}\right)^2 \frac{\sin 4\delta}{2 \sin 1''} + \&c$$

or, substituting the value of k,

$$\delta_1 = \delta + \frac{\frac{1}{q} \Sigma \sin^2 \frac{1}{2} I}{1 - \frac{1}{q} \Sigma \sin^2 \frac{1}{2} I} \frac{\sin 2\delta}{\sin 1''} + \&c$$

Bessel gives† a table from which with the argument I we find $I - \sin I$ in seconds, and $\frac{\sin^2 \frac{1}{2} I}{\sin 1''}$ The means of the tabular quantities taken for the several values of I are respectively $\varkappa$ and the numerator of the coefficient of 2δ A small subsidiary table corrects for the neglect of the denominator In the tables at the end of this volume I have adopted a different arrangement By the logarithmic formula

$$\log (1 - x) = - M (x + \tfrac{1}{2} x^2 + \&c)$$

in which $M = 0\ 4342945$, we find

$$\log k = -\log \frac{1}{k} = M \left[\frac{1}{q} \Sigma\, 2 \sin^2 \tfrac{1}{2} I + \tfrac{1}{2} \left(\frac{1}{q} \Sigma\, 2 \sin^2 \tfrac{1}{2} I\right)^2 + \&c\right]$$

where the second term of the series will mostly be inappreciable The approximate value of $\log k$, neglecting this term, will be

$$\log k = \frac{1}{q} \Sigma\, 2 M \sin^2 \tfrac{1}{2} I$$

and, employing this value in the second term, the complete value will be

$$\log k = \frac{1}{q} \Sigma\, 2 M \sin^2 \tfrac{1}{2} I + \frac{(\log k)^2}{2 M}$$

Table VIII. gives, in the column $\log k$, the value of $2 M \sin^2 \frac{1}{2} I$ corresponding to each interval I. The mean value of $\log k$, which is required in reducing several threads, will be found by taking the mean of the several values from the table When

* Pl. Trig, Art 254

† *Astron Nach*, Vol VI p 245

extreme precision is desired, this mean is to be increased by the small correction given in Table VIII A, which contains the value of the term $\frac{(\log k)^2}{2M}$, with the argument "mean log k" The column marked $\varkappa$ gives the value of $I-\sin I$ in seconds for each value of I, and the mean of the several values is likewise to be taken as the correction of the mean of the observed times T The sign of I is different for threads on opposite sides of the mean, and the sign of $\varkappa$ must be the same as that of I Hence the mean $\varkappa$ will be evanescent when the observed threads are symmetrically disposed about the mean

These tables, then, effect the reduction of the threads to a single instant in a remarkably simple manner, without requiring a previous knowledge of the position of the instrument We have only to add $\varkappa$ to the mean of the observed times, and to find the corrected declination by the formula

$$\tan \delta_1 = k \tan \delta \tag{157}$$

Then, taking the mean of the equatorial intervals i of the observed threads, we proceed to use equation (156), as representing the mean of all the threads The divisor γ is found, from the equations which determine γ and δ_1, to be

$$\gamma = \frac{1-\left(1-\frac{1}{k}\right)\cos^2\delta}{\cos(\delta_1-\delta)}$$

where we may put $\cos(\delta_1-\delta)=1$ Since i_0 is zero when all the threads are observed, we may put $\gamma=1$ in such cases without hesitation, since it is then the divisor only of the very small quantity c But in the method of observation here adopted we may in all cases put $\gamma=1$, for we suppose the slow-moving star to be observed on but one thread, in which case we have rigorously $\gamma=1$; and for the equatorial star (even if we extend this denomination to stars of the declination 50° or 60°) the intervals I will always be less than 2^m, and then the mean log k will always be less than 0 00001, and log γ will be less than 0 00002 We take then, as complete, the equation

$$c + i_0 = -\sin n \sin \delta_1 + \cos n \cos \delta_1 \sin(\tau_1 - m)$$

Substituting $\sin\tau_1 \cos m - \cos\tau_1 \sin m$ for $\sin(\tau_1 - m)$ and then

substituting the values of $\sin n$, $\cos n \cos m$, $\cos n \sin m$, from (78), the equation becomes

$$c + i_0 = -b(\sin\varphi\sin\delta_1 + \cos\varphi\cos\delta_1\cos\tau_1) + \cos a\cos\delta_1\sin\tau_1$$
$$+ \sin a(\cos\varphi\sin\delta_1 - \sin\varphi\cos\delta_1\cos\tau_1)$$

This equation will be satisfied when a is the true value of the azimuth of the instrument and τ_1 has been found by employing the true clock correction ϑ But, if a and ϑ denote assumed approximate values of these quantities, Δa and $\Delta\vartheta$ their required corrections, and if τ_1 is found by the formula

$$\tau_1 = \alpha - (T_1 + \vartheta) \tag{158}$$

then we must substitute in the above equation $a + \Delta a$ for a, and $\tau_1 - \Delta\vartheta$ for τ_1. We thus find (neglecting the products of the small quantities b, Δa, and $\Delta\vartheta$)

$$\begin{aligned} c + i_0 = -b&(\sin\varphi\sin\delta_1 + \cos\varphi\cos\delta_1\cos\tau_1) \\ &+ \cos a\cos\delta_1\sin\tau_1 + \sin a(\cos\varphi\sin\delta_1 - \sin\varphi\cos\delta_1\cos\tau_1) \\ &- \Delta a\sin a\cos\delta_1\sin\tau_1 + \Delta a\cos a(\cos\varphi\sin\delta_1 - \sin\varphi\cos\delta_1\cos\tau_1) \\ &- \Delta\vartheta\cos\delta_1(\cos a\cos\tau_1 + \sin a\sin\varphi\sin\tau_1) \end{aligned}$$

To adapt this for computation, let z and A be the zenith distance and azimuth of the point of the sphere whose declination is δ_1 and hour angle τ_1 · then we have (Vol I Art 14)

$$\left.\begin{aligned} \cos z &= \sin\varphi\sin\delta_1 + \cos\varphi\cos\delta_1\cos\tau_1 \\ \sin z\cos A &= -\cos\varphi\sin\delta_1 + \sin\varphi\cos\delta_1\cos\tau_1 \\ \sin z\sin A &= \cos\delta_1\sin\tau_1 \end{aligned}\right\} \tag{159}$$

and our equation becomes

$$c + i_0 = -b\cos z - \sin(a - A)\sin z - \Delta a\cos(a - A)\sin z$$
$$- \Delta\vartheta\cos\delta_1(\cos a\cos\tau_1 + \sin a\sin\varphi\sin\tau_1)$$

Here $a - A$ must be of the same order as $c + i_0$, and therefore may also be put for its sine, and its cosine may be put $= 1$. In the coefficient of $\Delta\vartheta$ we may put $\cos\delta$ for $\cos\delta_1$ Transposing the equation, and collecting the known terms, by putting

$$h = i_0 + b\cos z + (a - A)\sin z \tag{160}$$

we obtain the equation of condition

$$c + \Delta a\sin z + \Delta\vartheta\cos\delta(\cos a\cos\tau_1 + \sin a\sin\varphi\sin\tau_1) + h = 0 \tag{161}$$

in which the sign of c must be changed when the axis of the instrument is reversed. It must also be observed that, (as in meridian observations where $z = \varphi - \delta$), $\sin z$ must be negative when the star is north of the zenith this sign, however, will be given by the equations (159) if attention is paid to the signs of the other quantities To compute z and A by logarithms, let g and G be determined by the conditions

$$g \sin G = \sin \delta_1$$
$$g \cos G = \cos \delta_1 \cos \tau_1$$

then

$$\cos z = g \cos (\varphi - G)$$
$$\sin z \cos A = g \sin (\varphi - G)$$
$$\sin z \sin A = \cos \delta_1 \sin \tau_1$$

or (observing that $\tan \delta_1 = k \tan \delta$)

$$\left.\begin{aligned} \tan G &= \frac{k \tan \delta}{\cos \tau_1} \\ \tan A &= \frac{\tan \tau_1 \cos G}{\sin (\varphi - G)} \\ \tan z &= \frac{\tan (\varphi - G)}{\cos A} \end{aligned}\right\} \quad (162)$$

in which G and A are to be taken less than 90°, positive or negative according to the sign of their tangents, and the sign of $\tan z$ will be determined by that of $\tan (\varphi - G)$.

If we put

$$\tan F = \tan \tau_1 \sin \varphi \quad (163)$$

the coefficient of $\Delta\vartheta$ may be computed under the form

$$P = \frac{\cos \delta \cos \tau_1 \cos (a - F)}{\cos F} \quad (164)$$

The whole process of forming the equation of condition for each star is, therefore, as follows

1st Find $\varkappa$ and $\log k$ from Table VIII, and add $\varkappa$ to the mean of the observed times on the several threads Call the resulting time T_1, and find

$$\tau_1 = \alpha - (T_1 + \vartheta)$$

in which ϑ is the *assumed* clock correction reduced to the time T_1

2d. Compute A, z, P by the equations (162), (163), and (164), and h by the equation

$$h = i_0 + b \cos z + (a - A) \sin z$$

in which i_0 is the mean of the equatorial intervals of the observed threads from the mean thread, b is the inclination of the rotation axis, and a is the assumed azimuth of the instrument.

Then the equation of condition is

$$\pm c + \Delta a \sin z + P\, \Delta\vartheta + h = 0$$

in which the sign of c is to be determined by the position of the rotation axis of the instrument

From all the equations thus formed, the most probable values of c, Δa, and $\Delta\vartheta$ will be found by the method of least squares

If the azimuth of the instrument has been changed during the observations, these must be divided into two sets, and two different assumed azimuths a, a', with the corrections Δa and $\Delta a'$, will be used in the formation of the equations

It is hardly necessary to remark that all the quantities i_0, b, $a - A$, c, Δa, $\Delta\vartheta$ are expressed in the same unit, either of time or arc: the latter will perhaps be most convenient

EXAMPLE —The following observations were taken by BESSEL with a very small portable instrument, to determine the time

Munich, 1827, June 27

Circle East	I	II	III	IV	V	Level
χ Scorpii	$8^m 12^s.2$	$7^m 52^s.5$	$11^h\ ^m\ ^s$	.		$-1^d.080$
ε Ophiuchi	14 22.4	14 2.6	11 13 43.2	$13^m 22^s.7$	$13^m 1^s.6$	-0.608
α Ursæ Minoris	. . .	. .	11	20 3.2	.	-0.079
Circle West.						
α Ursæ Minoris	. . .	. . .	$13^h 19^m 52^s.8$	. . .		$+1^d.583$
** a (Anon)*	$21^m 35^s.5$	$21^m 56^s.2$	13 22 16.2	$22^m 37^s.0$	$22^m 58^s.8$	$+1.670$
24 Scuti Sob	26 11.4	26 31.6	13 26 52.3	27 12.8	27 34.4	$+1.837$

The azimuth of the instrument was changed between the two sets of observations, *circle east* and *circle west*

The place of observation was in the garden of Dr STEINHEIL'S house, where the latitude was $\varphi = 48° 8' 40''$

The chronometer was a pocket mean time chronometer of

KESSEL Its correction to sidereal time at 12^h (chronometer time) was assumed to be $\vartheta = 5^h\ 1^m\ 3^s\ 00$, and its rate on sidereal time was $+ 9^s\ 19$ per hour (losing).

The equatorial intervals of the threads from the mean thread were as follows for *circle west*:

I	II	III	IV	V
+ 598″ 08	+ 303″ 09	+ 6″ 19	— 294″ 91	— 612″ 46

The value of one division of the level was 4″ 49 The pivots were of unequal thickness, the correction for which had previously been found to be — 1″.89 for circle west

The apparent places of the stars on the given date were as follows

	α	δ
χ *Scorpii*	$16^h\ 2^m\ 36^s\ 71$	— 9° 36′ 34″ 2
ε *Ophiuchi*	16 9 13 90	— 4 16 8 9
α *Ursæ Minoris*	0 59 5.28	+ 88 23 2 5
* *a* (*Anon.*)	18 18 8 49	+ 14 52 36 7
24 *Scuti Sob*	18 19 24 11	— 14 39 56 0

The reduction of the observations of χ *Scorpii* and ε *Ophiuchi* on the several threads to a mean will serve to illustrate the mode of using our Table VIII, although in this case the quantity $\varkappa$ is quite insensible and log k nearly so We have, then,

Circle East	T	I	$\varkappa$	log k	i
χ *Scorpii* I	$11^h\ 8^m\ 12^s\ 2$	— 9^s 85	0 00	0 0000001	— 598″ 08
II	7 52 5	+ 9 85	0 00	1	— 303 09
Means	11 8 2 35	0 00	0 00	0 0000001	— 450 59
ε *Ophiuchi*	11 14 22 4	— 39^s 90	0 00	0 0000018	— 598 ″08
	14 2 6	— 20 10		5	— 303 09
	13 43 2	— 0 70		0	— 6 19
	13 22 7	+ 19 80		5	+ 294 .91
	13 1 6	+ 40 90	0 00	19	+ 612 .46
Means	11 13 42 50	0 00	0 00	0 0000009	0 00

To form the equations of condition for the three stars observed, circle east, we now find by the formulæ (158, &c)*

	χ *Scorpii*	ε *Ophiuchi*	α *Ursæ Min*
$T + x = T_1$	11^h 8^m 2^s 35	11^h 13^m 42^s 50	11^h 20^m 3^s 20
Assumed ϑ	+ 5 1 3 00	+ 5 1 3 00	+ 5 1 3 00
Rate to 12^h	— 7 96	— 7 09	— 6 12
$T_1 + \vartheta$	16 8 57 39	16 14 38 41	16 21 0 08
α	16 2 36 71	16 9 13 90	0 59 5 28
τ_1	— 6 20 68	— 5 24 51	+ 8 33 5 20
(in arc)	— 1° 35′ 10″ 2	— 1° 21′ 7″ 65	129° 31′ 18″ 0
log sec τ_1	0 000166	0 000121	*n*0 196290
log tan δ	*n*9 228677	*n*8 873022	1 549573
log k	0 000000	0 000001	0 000000
log tan G	*n*9 228843	*n*8 873144	*n*1 745863
G	— 9° 36′ 47″ 2	— 4° 16′ 13″ 2	— 88° 58′ 17″ 3
$\phi - G$	57 45 27 2	52 24 53 2	137 6 57 3
log tan τ_1	*n*8 442337	*n*8 372975	*n*0 083561
log cos G	9 993858	9 998793	8 254067
log cosec $(\phi - G)$	0 072734	0 101030	0 167161
log tan A	*n*8 508929	*n*8 472798	*n*8 504789
log cos A	9 999774	9 999808	9 999778
log tan $(\phi - G)$	0 200130	0 113683	*n*9 967894
log tan z	0 20036	0 11387	*n*9 96812
log sin z	9 92733	9 89904	*n*9 83296
log cos z	9 72697	9 78517	9 86484
A	— 1° 50′ 55″ 85	— 1° 42′ 4″ 85	— 1° 49′ 52″ 74
Assumed a	— 1 42 0		
$a - A$	+ 8′ 55″ 85	+ 4″ 85	+ 7′ 52″ 74
b	— 2 96	— 0 84	+ 1 54
$(a - A)$ sin z	+ 453″ 29	+ 3″ 84	— 321″ 80
b cos z	— 1 58	— 0 51	+ 1 13
c	— 450 59	0 00	+ 294 91
λ	+ 1″ 12	+ 3″ 33	— 25″ 76
l tan τ_1 sin ϕ = l tan F	*n*8 314394	*n*8 245032	*n*9 955618
F	— 1° 10′ 54″	— 1° 0′ 26″	— 42° 4′ 39″
$a - F$	— 31 6	— 41 34	40 22 39
log cos δ	9 99886	9 99879	8 45025
log cos τ_1	9 99983	9 99988	*n*9 80871
log cos $(a - F)$	9 99998	9 99997	9 88184
log sec F	0 00009	0 00067	0 12946
log P	9 99876	9 99873	*n*8 26526

* We have neglected the diurnal aberration, as an insensible quantity in observations with so small an instrument

Hence the equations of condition, circle east, are

$$
\begin{array}{lllll}
\chi \textit{ Scorpii} & -c + 0.8459\,\Delta a & + 0.9857\,\Delta\vartheta & + \ \ 1''.12 & = 0 \\
\epsilon \textit{ Ophiuchi} & -c + 0.7926\,\Delta a & + 0.9971\,\Delta\vartheta & + \ \ 3.33 & = 0 \\
\alpha \textit{ Urs Min} & -c - 0.6807\,\Delta a & - 0.0184\,\Delta\vartheta & - 25.76 & = 0
\end{array}
$$

In the same manner, we find for the stars observed, circle west,

	α *Ursæ Min*	$*a$	24 *Scuti Sob*
$T_1 + \vartheta$	$18^h\ 21^m\ 8^s.03$	$18^h\ 23^m\ 32^s.34$	$18^h\ 28^m\ 8^s.81$
τ_1	$99°\ 29'\ 18''.75$	$-\ 1°\ 20'\ 57''.75$	$-\ 2°\ 11'\ 10''.5$
$\log k$	0.000000	0.000001	0.000001
$\log \tan A$	n8.617903	n8.618105	n8.618199
$\log \sin z$	n9.82674	9.73943	9.94926
$\log \cos z$	9.87007	9.92217	9.65941
A	$-\ 2°\ 22'\ 32''.22$	$-\ 2°\ 22'\ 36''.20$	$-\ 2°\ 22'\ 38''.05$
Assumed a'	$-\ 2\ \ 22\ \ 40$		
$a' - A$	$-$ 7.78	$-$ 3.80	$-$ 1.95
b	$+$ 5.22	$+$ 5.61	$+$ 6.36
$(a' - A) \sin z$	$+$ 5.22	$-$ 2.09	$-$ 1.74
$b \cos z$	$+$ 3.87	$+$ 4.69	$+$ 2.90
i_0	$+$ 6.19	0.00	0.00
h	$+$ 15.28	$+$ 2.60	$+$ 1.16
$\log P$	n7.74071	9.98501	9.98544

and hence the equations for these stars are

$$
\begin{array}{lllll}
\alpha \textit{ Urs Min} & +c - 0.6710\,\Delta a' & - 0.0055\,\Delta\vartheta & + 15''.28 & = 0 \\
*a & +c + 0.5488\,\Delta a' & + 0.9661\,\Delta\vartheta & + \ \ 2.60 & = 0 \\
24 \textit{ Scuti Sob} & +c + 0.8897\,\Delta a' & + 0.9670\,\Delta\vartheta & + \ \ 1.16 & = 0
\end{array}
$$

The six equations involve four unknown quantities, which might be determined from the four normal equations formed in the usual manner. But, where the number of equations is so little greater than that of the unknown quantities, it is not worth while to employ this method. We can here obtain the same result by eliminating Δa from the first set and $\Delta a'$ from the second, and then combining the resulting equations for the determination of c and $\Delta\vartheta$. Thus, substituting the values of Δa

and $\Delta a'$ found from the equations for *α Ursæ Min* in the equations of the other two stars in the two groups respectively, we have the four equations

χ Scorpii	$-2.2427\,c + 0\,9629\,\Delta\vartheta - 30''\,89 = 0$
ε Ophiuchi	$-2\,1642\,c + 0\,9757\,\Delta\vartheta - 26\;\;66 = 0$
a	$+1\,8179\,c + 0\,9616\,\Delta\vartheta + 15\;\;10 = 0$
24 *Scuti Sob*	$+2\,3259\,c + 0\,9597\,\Delta\vartheta + 21\;\;42 = 0$

from which we derive the normal equations

$$18\,4281\,c - 0\,2908\,\Delta\vartheta + 204''\,25 = 0$$
$$-\;0\,2908\,c + 3\,7249\,\Delta\vartheta - \;20\;\;68 = 0$$

which give

$$\Delta\vartheta = +\;\;4''\,69 = +\,0^s\,31$$
$$c = -\,11''\,01 = -\,0^s.73$$

Hence we have, finally,

$$\vartheta = +\,5^h\,1^m\,3^s\,31$$

By the four time stars, severally, we have $3^s\,43$, $3^s\,18$, $3^s\,34$, $3^s\,29$

The methods which have here been given, for finding the time with a transit instrument out of the meridian, are intended for the use of observers in the field who have but little time to adjust their instruments and wish to collect all the data possible, reserving their reduction for a future time The greater labor of these reductions, compared with those of meridian observations, is often more than compensated by the saving of time in the field

DETERMINATION OF THE GEOGRAPHICAL LATITUDE BY A TRANSIT INSTRUMENT IN THE PRIME VERTICAL

174. The transit instrument is said to be in the prime vertical when the great circle described by its collimation axis is in the prime vertical. The rotation axis is then perpendicular to the plane of the prime vertical, and lies in the intersection of the planes of the meridian and horizon We owe to BESSEL the application of the instrument in this position to the determination of the latitude of the place of observation.

The fundamental principle of the method may be briefly

stated as follows * Let PZ, Fig 45, be the meridian, SZS' the prime vertical of the observer; SMS' the diurnal circle of a star which crosses the meridian between the zenith and the equator Such a star crosses the prime vertical above the horizon at two points S and S' on opposite sides of the zenith and at equal distances from the meridian If then we observe the transits at these two points with an instrument perfectly adjusted in the prime vertical, and note the times by a clock whose rate is well known, we determine the hour angle $ZPS' = t$, which is equal to one-half the elapsed sidereal time between the two observations, and, therefore, in the right triangle PZS' we know this angle and the hypothenuse $PS' = 90° - \delta$, from which we find the side $PZ = 90° - \varphi$; whence the formula

Fig 45

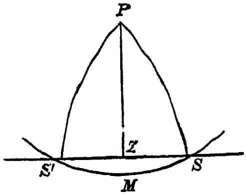

$$\tan \varphi = \tan \delta \sec t$$

in which φ is the latitude It is evident that only those stars can be observed on the prime vertical whose declinations are between 0 and φ The nearer the observations to the zenith, that is, the less the difference between the declination and the latitude, the less the effect of errors in the observed times upon the value of $\sec t$, and, consequently, upon the computed latitude

The advantage of this method of finding the latitude lies chiefly in the facility with which all the instrumental errors may be eliminated by using the instrument alternately in opposite positions of the rotation axis, reversing it either between the observations on two different stars or between observations of the same star, or using it in one position on one night and in the reverse position on the same stars on another night. Different methods of reduction apply to these several methods of observation, which will be hereafter investigated We must first show how to place the instrument in or near the prime vertical

175. *Approximate adjustment in the prime vertical*—The middle thread must be carefully adjusted in the collimation axis, or as nearly so as possible Then compute the sidereal time of passing the prime vertical for some star whose declination is small,

* See also Vol I Arts 192 and 193

that is, a star which passes the prime vertical at a low altitude If $t =$ the hour angle in the prime vertical, $\delta =$ the declination, and $\varphi =$ the assumed latitude, we have

$$\cos t = \tan \delta \cot \varphi$$

and, if $\alpha =$ the star's right ascension, $\Theta =$ the sidereal time of passing the prime vertical,

$$\Theta = \alpha \mp t \left\{ \begin{matrix} - \text{ for east transit} \\ + \text{ " west "} \end{matrix} \right\}$$

At this time, therefore, by the clock (allowing for the correction of the clock), bring the middle thread upon the star, observing to keep the rotation axis as nearly horizontal as possible. The zenith distance at which the star will be observed may also be previously computed, to facilitate the finding For this purpose we have

$$\cos z = \frac{\sin \delta}{\sin \varphi}$$

which gives the true zenith distance, from which we should subtract the refraction in the case of very low stars.

After the instrument has thus been brought near the prime vertical by one star, the rotation axis should be carefully levelled, and the adjustment verified by another star In the first adjustment the frame of the instrument would be moved, but in the second only the V which is provided with a small motion in azimuth. When the instrument is provided with a graduated horizontal circle, the most satisfactory method is to adjust it first in the meridian and then revolve it in azimuth 90°.

In preparing for an observation on the extreme threads, we must know the interval required by the star to pass from one of these to the middle thread. It will be shown hereafter that if $i =$ the equatorial interval of the sidereal thread from the middle, the corresponding star interval I, near the prime vertical, will be nearly

$$I = \frac{i}{\sin \varphi \cos \delta \sin t} = \frac{i}{\sin \varphi \sin z}$$

and it is easily shown that when the hour angle t becomes $t \pm I$, the zenith distance becomes $z \pm 15\, I \cos \varphi$, where the factor 15 is used to reduce I from time to arc. The first observation on a side thread at the east transit will, therefore, be expected about I

econds before the time of transit already computed, and at a greater zenith distance by about $15 I \cos\varphi$, while the first observation at the west transit will also be expected I seconds before the time of transit computed, but nearer the zenith by about $15 I \cos\varphi$ These simple calculations are accurate enough for the purpose of preparing for the observation When the intervals of the threads are not known at first, they will be obtained accurately enough from the early observations for subsequent use in finding stars

For stars whose declination is very nearly equal to the latitude, the zenith distance and hour angle on the prime vertical may be more accurately computed by the formulæ

$$\sin z = \frac{\sqrt{\sin(\varphi - \delta)\sin(\varphi + \delta)}}{\sin\varphi} \qquad \sin t = \frac{\sin z}{\cos\delta}$$

176. *Correction for inclination of the axis* —When the rotation axis is in the meridian, but is inclined to the horizon, the great circle described by the collimation axis is still perpendicular to the meridian, but intersects it in a point whose angular distance from the zenith of the observer is precisely equal to the inclination of the rotation axis This point may be called *the zenith of the instrument*, and the great circle described by the collimation axis, *the prime vertical of the instrument* If we put

$\varphi' =$ latitude of the zenith of the instrument,
$\varphi =$ " " observer,
$b =$ inclination of the rotation axis, positive when north end is elevated,

we have

$$\varphi = \varphi' + b$$

and the only consideration of the level correction required in this case is to apply it directly to the latitude found from the instrument by the same methods that are used when the axis is truly horizontal

But if the rotation axis is not in the meridian, nor the middle thread in the collimation axis, the simple solution given in Art 174 requires some modification. I proceed now to consider the instrument in the most general manner, with deviations in azimuth, level, and collimation, and to show how to eliminate the effects of these deviations

177 *To find the latitude from the observed times of transit of a given star over a given thread east and west of the meridian, the rotation axis being in the same position at both observations* —Let the rotation axis lie in the vertical circle ZA, Fig 46, and suppose the north end elevated, so that the great circle of the instrument is $E'Z''W'$, and a thread at the distance c south of the collimation axis describes the small circle SS' Let A be the point in which the rotation axis produced meets the celestial sphere, and through A and the pole P draw the great circle APZ''. This great circle is perpendicular to $E'Z''W'$, and the observations of the star on the thread at S and S' are equally distant from it We may call PZ'' the meridian, $E'Z''W'$ the prime vertical, and Z'' the zenith *of the instrument*

Fig 46

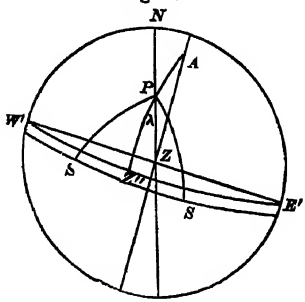

Now, the equations (78) and (79) of Art 123, being entirely general, apply to the instrument in this position, but it is convenient to make some modifications of the notation The point A being now near the north point of the horizon, its azimuth is nearly zero and its hour angle nearly 180° If we put

$$\text{the azimuth of } A = 90^\circ + (a) = -a, \text{ or } (a) = -(90^\circ + a)$$
$$\text{the hour angle of } A = 90^\circ - m = 180^\circ + \lambda, \text{ or } m = -(90^\circ + \lambda)$$

where we distinguish the a of the equations (78) by enclosing it in brackets; then a is the small azimuth of the rotation axis reckoned from the north towards the east, and λ is the hour angle of the meridian of the instrument (or, as we might call it, the west longitude of the instrument): and the substitution of these quantities in equations (78) gives

$$\left.\begin{aligned} \cos n \cos \lambda &= -\sin b \cos \varphi + \cos b \cos a \sin \varphi \\ \cos n \sin \lambda &= \cos b \sin a \\ \sin n &= \sin b \sin \varphi + \cos b \cos a \cos \varphi \end{aligned}\right\} \quad (165)$$

and as τ in (79) is the hour angle east of the meridian, while it is here more convenient to reckon it, in the usual manner, towards the west, we shall change its sign, so that the factor $\sin(\tau - m)$ will become

$$\sin(-\tau + 90^\circ + \lambda) = \cos(\tau - \lambda)$$

and the equation (79) will become

$$\sin c = -\sin n \sin \delta + \cos n \cos \delta \cos(\tau - \lambda) \qquad (166)$$

For the convenience of future reference, I shall here recapitulate the notation used in these our fundamental equations namely,

$\varphi =$ the latitude of the place of observation, *positive* when *north;*
$\delta =$ the declination of the star, *positive* when *north,*
$\tau =$ the hour angle of the star,
$a =$ the azimuth of the rotation axis, *positive* when *east of north,*
$b =$ the inclination of the rotation axis, *positive when the north end is elevated,*
$c =$ the collimation constant of a thread, *positive* when the thread is *north** of the collimation axis,
$\lambda =$ the longitude of the meridian of the instrument, *positive* when *west,*
$n =$ the declination of the north end of the axis

If, further, when the star is observed at both the east and west transits, we put

$\tau, \tau' =$ the hour angles of the east and west observations, respectively,
$T, T' =$ the clock times of observation,
$\Delta T, \Delta T' =$ the corresponding clock corrections,
$\alpha =$ the right ascension of the star,
$2\vartheta =$ the elapsed sidereal time between the east and west observations on the same thread,

we have

$$\tau = T + \Delta T - \alpha \qquad \tau' = T' + \Delta T' - \alpha$$
$$\vartheta = \tfrac{1}{2}(T' + \Delta T' - T - \Delta T)$$
$$\lambda = \tfrac{1}{2}(T' + \Delta T' + T + \Delta T) - \alpha$$

whence $\vartheta = \tau' - \lambda = \lambda - \tau$

We see that ϑ will be well determined when the clock *rate*, or $\Delta T' - \Delta T$, is known, but to find λ we must also know the clock correction and the star's right ascension.

---

* When the *thread* is north of the prime vertical, the small circle of the sphere which corresponds to it is *south* of the prime vertical, and *vice versa*

Now, let h and β be assumed so as to satisfy the conditions

$$h \sin \beta = \sin b$$
$$h \cos \beta = \cos b \cos a$$

then the equations (165) become

$$\left.\begin{aligned} \cos n \cos \lambda &= h \sin (\varphi - \beta) \\ \cos n \sin \lambda &= \cos b \sin a \\ \sin n &= h \cos (\varphi - \beta) \end{aligned}\right\} \quad (167)$$

Substituting in (166) the values of $\cos n$, $\sin n$, given by these equations, and also $\cos (\tau - \lambda) = \cos (\lambda - \tau') = \cos \vartheta$, we have

$$\sin c = - h \cos(\varphi - \beta) \sin \delta + h \sin (\varphi - \beta) \cos \delta \frac{\cos \vartheta}{\cos \lambda}$$

to reduce which we assume h' and φ' to satisfy the conditions

$$\left.\begin{aligned} h' \sin \varphi' &= \sin \delta \\ h' \cos \varphi' &= \cos \delta \frac{\cos \vartheta}{\cos \lambda} \end{aligned}\right\} \quad (168)$$

which transform the preceding equation into

$$\sin c = h h' \sin (\varphi - \varphi' - \beta)$$

whence

$$\sin (\varphi - \varphi' - \beta) = \frac{\sin c}{h h'}$$

But, as c is never more than 15′, and $h' = \frac{\sin \delta}{\sin \varphi'}$ will never be less than $\frac{1}{2}$, while h differs from unity only by a quantity depending upon $\sin^2 a$, the angle $\varphi - \varphi' - \beta$ will never exceed 30′ so that we may write, without sensible error,

$$\varphi - \varphi' - \beta = \frac{c \sin \varphi'}{\sin \delta}$$

To find β, we have

$$\tan \beta = \tan b \sec a$$

or, since b is only a few seconds and a but a few minutes,

$$\beta = b$$

and φ' is determined by (168), which give

$$\tan \varphi' = \tan \delta \sec \vartheta \cos \lambda \quad (169)$$

and then we have

$$\varphi = \varphi' + b + \frac{c \sin \varphi'}{\sin \delta} \tag{170}$$

It is evident that the factor $\cos \lambda$ in (169) corrects for azimuth deviation, the term b in (170) for inclination of the rotation axis, and the term $\dfrac{c \sin \varphi'}{\sin \delta}$ for the distance of the thread from the collimation axis.

In these equations, ϑ and λ are obtained from the observed times on the same thread, the rotation axis being in the same position at the two observations. The constant c has then the same sign at both observations, $+$ for north threads, $-$ for south threads; and its value must be known for each thread. We deduce then, by (169) and (170), from each thread separately, a value of the latitude, and take the mean of all the results as the latitude given by the instrument *in this position of the axis*. But if the pivots are unequal the striding level does not give the true value of b directly. (See Art. 137.) Moreover, the constant c is composed of the equatorial interval of the given thread from the middle thread combined with the collimation constant of the middle thread, and will, therefore, involve both the error in the determination of the interval and in the adjustment for collimation.

Now, to eliminate all these instrumental errors, repeat the observations on the same star on a subsequent night in the reverse position of the axis. Let p be the (unknown) correction for inequality of pivots, q the (unknown) correction of c for error in the interval of thread and collimation adjustment; let φ', φ'' be the latitudes given by (169) for the same star on different nights and in reverse positions of the axis; b, b' the inclinations of the rotation axis given by the spirit level. The true inclinations are $b + p$ and $b' - p$, and the true value of the collimation constant for the given thread is $c + q$; so that in the first position of the axis we have

$$\varphi = \varphi' + b + p + (c + q) \frac{\sin \varphi'}{\sin \delta}$$

and in the second position,

$$\varphi = \varphi'' + b' - p - (c + q) \frac{\sin \varphi''}{\sin \delta}$$

and the mean of these is

$$\varphi = \tfrac{1}{2}(\varphi' + b + \varphi'' + b') + \frac{c+q}{2}\left[\frac{\sin\varphi' - \sin\varphi''}{\sin\delta}\right]$$

so that the inequality of pivots is wholly eliminated, and the error of thread and collimation is reduced to the term

$$\frac{q}{2}\left[\frac{\sin\varphi - \sin\varphi''}{\sin\delta}\right] = \frac{q\sin(\varphi' - \varphi'')\cos\varphi}{2\sin\delta} \text{ (nearly)}$$

which for $q = 1''$, $\varphi' - \varphi'' = 1°$, is $0''\,008\cos\varphi\,\text{cosec}\,\delta$, and that part of this small quantity which depends on the collimation of the middle thread will have different signs for north and south threads, and will also wholly disappear from the mean There will remain, therefore, in the result only that part of this term which depends on the errors of the thread intervals As the thread intervals can easily be determined in the meridian within $1''$, this remaining error in the latitude will be insensible in practice, and we may assume the mean of two nights' observations to be wholly free from the instrumental errors

There remain yet the errors of observation and of the clock These affect both the angles ϑ and λ As λ is always small, their effect will not generally be appreciable in $\cos\lambda$, and their effect in $\sec\vartheta$ will be less the nearer the star is to the zenith, for the clock errors that appear in ϑ are only the variations of *rate*, and the less the interval the less the effect of these upon ϑ, and, at the same time, the less the angle ϑ the less effect will any change in ϑ produce in $\sec\vartheta$

The expression for the error in φ resulting from an error in ϑ is found by differentiating (169); whence

$$d\varphi\sec^2\varphi' = d\vartheta\tan\delta\sec\vartheta\tan\vartheta\cos\lambda = d\vartheta\tan\varphi'\tan\vartheta$$

or nearly

$$d\varphi = \frac{d\vartheta}{2}\sin 2\varphi\tan\vartheta$$

and $\sin 2\varphi$ is greatest for $\varphi = 45°$, in which case we have $d\varphi = \frac{d\vartheta}{2}\tan\vartheta$. For $\vartheta = 1^h$, $d\varphi = d\vartheta \times 0.13$; or an error in ϑ of $1^s = 15''$ produces an error in φ of less than $2''$ If we assume, then, that ϑ can always be obtained within 1^s, we ought to expect the mean of the latitudes obtained in two nights from the same thread and with the same star to agree with that found in the

same way from any other thread, within 2″, when the observations are taken within one hour of the meridian. This, in fact, is the experience of observers in the use of this method.

Finally, the latitude is affected by an error in the tabulated declination of the star. When $\varphi < 45°$, the error in the latitude is always greater than the error of the declination; but when $\varphi > 45°$, the error in the latitude will be less than the error in the declination, if we use stars whose declinations fall between the limits 90° and $90° - \varphi$, as will be seen at once by examining the equation

$$d\varphi = d\delta \, \frac{\sin 2\varphi}{\sin 2\delta}$$

which is found by differentiating (169) with reference to φ and δ. It is evident, therefore, that this method is better suited to high latitudes than to low ones, although satisfactory results may be obtained by it even in latitudes not greater than 30°.

178. Instead of deducing a value of the latitude from each thread, it is usually more convenient to reduce the observations on the several threads to the middle thread, and then to find the value of the latitude from the mean. This value will, of course, be the same as the mean of the several values found from the threads individually. I proceed, therefore, to investigate the formula for reducing the observations on the side threads to the middle thread.

Let

$i =$ the equatorial interval of any given thread north of the middle thread,

$I =$ the corresponding star interval,

then, τ being the hour angle of the star when on the middle thread, $\tau - I$ is its hour angle when on the given thread: so that, c now denoting the collimation constant of the middle thread, and, consequently, $c + i$ being now put for c in (166), we have

$$\sin(i + c) = -\sin n \sin \delta + \cos n \cos \delta \cos(\tau - \lambda - I)$$

while for the middle thread we have

$$\sin c = -\sin n \sin \delta + \cos n \cos \delta \cos(\tau - \lambda)$$

The difference of these equations gives

$$2 \cos(\tfrac{1}{2} i + c) \sin \tfrac{1}{2} i = 2 \cos n \cos \delta \sin(\tau - \lambda - \tfrac{1}{2} I) \sin \tfrac{1}{2} I$$

In the first member, since i and c are both small, we may put $2 \cos \frac{1}{2} i \sin \frac{1}{2} i$, or $\sin i$, and hence

$$2 \sin \tfrac{1}{2} I = \frac{\sin i}{\cos n \cos \delta \sin (\tau - \lambda - \frac{1}{2} I)}$$

If the azimuth a of the instrument is even as great as 20′ (and it will always be much less), it is easily shown that log h in (167) will not be less than 9 999993, that is, it will not change the fifth decimal place by a unit in the computation of log cos n, and, as this degree of accuracy is evidently even more than sufficient in computing I, we shall here take $\cos n = \sin (\varphi - b)$, and hence

$$2 \sin \tfrac{1}{2} I = \frac{\sin i}{\sin (\varphi - b) \cos \delta \sin (\tau - \lambda - \frac{1}{2} I)} \qquad (171)$$

This very exact formula will be required, however, only where the star is very near the zenith In most cases we can employ $\sin \varphi$ for $\sin (\varphi - b)$ and put $\frac{1}{2} I$ instead of its sine

When the star has been observed on the middle thread, both east and west of the meridian, we may find $\tau - \lambda = \vartheta$ with sufficient accuracy for computing the reductions of the threads, by taking the half difference of the observed times on this thread, and hence the formula will be

$$2 \sin \tfrac{1}{2} I = \frac{\sin i}{\sin (\varphi - b) \cos \delta \sin (\vartheta - \frac{1}{2} I)} \qquad (172)$$

or, in most cases,

$$I = \frac{i}{\sin \varphi \cos \delta \sin (\vartheta - \frac{1}{2} I)} \qquad (172^*)$$

In applying these formulæ, the signs of i, I, and ϑ must be carefully observed Thus, i will be positive for north and negative for south threads; ϑ positive for a star west, and negative for a star east of the meridian The value of I required in the second member may be found with sufficient accuracy from the observations themselves, and, in order to obtain it with the proper sign, it is to be observed that the observed time on the given thread is always to be subtracted from that on the middle thread.

Having reduced the several observations to the middle thread by adding the values of I thus found, the means of the results

for the east and west transits, respectively, will now be denoted by T and T', after which ϑ and λ will be accurately found, and the latitude computed precisely as in the preceding article The quantity c in equation (170) will now denote the collimation constant of the middle thread

The level constant should be determined both before and after each transit east and west, and the mean of the four values employed for b, particular care being required in the determination of this quantity, since any error in it affects the resulting latitude by its whole amount

EXAMPLE —The following observations were taken by HANSEN in Heligoland with a transit instrument in the prime vertical.* The hours are given only for the middle thread, and the observations on threads VII, VI, and V are placed immediately below those on I, II., and III, respectively

1824, July 31 —*Circle North*

γ *Draconis*	I and VII	II. and VI	III and V	IV	Level
East transit	$14^m\ 28^s.8$ 9 26	$13^m\ 36^s.8$ 10 13	$12^m\ 46^s$ 11 3.8	$16^h\ 11^m\ 54^s$	$-0^d.40$
West "	27 35 32 37	28 26.8 31 50	29 17.5 31 0	19 30 9.8	-1.37

Clock correction (sidereal) at $14^h\ 22^m = +\ 1^m\ 47^s.40$ Daily rate, $+\ 4^s.12$

1824, August 3 —*Circle South*

γ *Draconis*	I and VII	II and VI	III and V	IV	Level
East transit	$8^m\ 57^s$ 13 59	$9^m\ 47^s$ 13 9.5	$10^m\ 36^s$ 12 17.5	$16^h\ 11^m\ 27^s.5$	$-1^d.50$
West "	32 15 27 14	31 26 28 3	30 36.5 28 55	19 29 44	-0.03

Clock correction at $14^h\ 8^m = -\ 1^m\ 59^s.98$ Daily rate, $+\ 4^s.27$

The threads are numbered from the circle end of the axis, so that for "circle north" stars at the east transit are observed first on thread VII Their equatorial intervals, as found by observations in the meridian, were—

	I	II	III	V	VI	VII
(Circle north) i,	$+32^s.382$	$+21^s.557$	$+10^s.963$	$-10^s.652$	$-21^s.426$	$-31^s.672$

* *Astron Nach*, Vol VI p 117.

The value of one division of the level was $2''.5$ (of arc).
The collimation constant was $c = +\ 2''\ 18$ (in arc), *circle north*
The assumed latitude was $\varphi = 54^\circ\ 10'\ 8$.
For the given dates, the apparent places of the star were—

γ *Draconis*	α	δ
1824, July 31,	$17^h\ 52^m\ 34^s\ 42$	$+\ 51^\circ\ 30'\ 57''\ 64$
" Aug 3,	" " 34 37	" " 58 04

We shall first reduce the observations of July 31 To compute the thread intervals, we find an approximate value of ϑ from the observed times on the middle thread, the difference of which is $3^h\ 18^m\ 15^s\ 8$, and, since in this time the clock rate is $+\ 0^s\ 6$, we take $2\vartheta = 3^h\ 18^m\ 16^s\ 4$, and hence

$$(\text{Approx})\ \vartheta = 1^h\ 39^m\ 8^s\ 2$$

Taking the differences between the observed times on each side thread and that on the middle thread for both the east and west transits, the mean of the two values for each thread may be used as a sufficiently exact value of I to be used in the second member of (172), namely.

	I	II	III	V	VI	VII
(Approx) I,	$+\ 2^m\ 34^s\ 8$	$+\ 1^m\ 42^s\ 9$	$+\ 0^m\ 52^s\ 2$	$-\ 0^m\ 50^s\ 2$	$-\ 1^m\ 40^s\ 6$	$-\ 2^m\ 27^s\ 8$
$\vartheta - \frac{1}{2}I$,	$1^h\ 37\ 50\ 8$	$1^h\ 38\ 16\ 7$	$1^h\ 38\ 42\ 1$	$1^h\ 39\ 33\ 3$	$1^h\ 39\ 58\ 5$	$1^h\ 40\ 22\ 1$

whence the reductions to the middle thread are, for the west transit,

$$I,\quad +\ 2^m\ 34^s.97 +\ 1^m\ 42^s\ 74 +\ 0^m\ 52^s\ 04 -\ 0^m\ 50^s\ 16 -\ 1^m\ 40^s\ 49 -\ 2^m\ 28^s\ 01$$

and the same values, with their signs changed, are used for the east transit These being applied to the observed times, we have—

	East		West
I	$16^h\ 11^m\ 53^s\ 83$		$19^h\ 30^m\ 9^s\ 97$
II	54 06		9 54
III	53 96		9 54
IV	54 00		9 80
V	53 96		9 84
VI	53 49		9 51
VII	54 .01		9 49
$T =$	16 11 53 90	$T' =$	19 30 9 67
$\Delta T =$	+ 1 47 71	$\Delta T' =$	+ 1 48 28
$T + \Delta T =$	16 13 41 61	$T' + \Delta T' =$	19 31 57 95
	19 31 57 95		16 13 41 61
$\frac{1}{2}$ sum $=$	17 52 49 .7c	$\frac{1}{2}$ diff $=$	1 39 8 17
$\alpha =$	17 52 34 42	$= \vartheta =$	$24^\circ\ 47'\ 2''\ 55$
$\lambda =$	15 36		
$=$	$0^\circ\ 3'\ 5\jmath''$		

Hence, by (169) and (170),

log tan δ	0 0996440		$c = +2''\ 18$	
log sec ϑ	0 0419648		log c	0 3385
log cos λ	9 9999997		log sin φ'	9 9089
log tan φ'	0 1416085		log cosec δ	0 1064
	$\varphi' = 54°\ 10'\ 47''\ 41$			0 3538

$$\frac{c \sin \varphi'}{\sin \delta} = \qquad +\ 2\ \ 26 \quad . \quad . \quad .$$

$$b = \qquad -\ 2\ \ 21$$

$$\varphi = 54\ \ 10\ \ 47\ \ 46$$

For the observations of August 3, we find, from the observed times on the middle thread,

$$(\text{Approx}) \ \vartheta = 1^h\ 39^m\ 8^s\ 5$$

and from the observed times on the side threads compared with the middle thread,

	I	II	III	V	VI	VII
(Approx) I,	$-2^m\ 30^s\ 8$	$-1^m\ 41^s\ 2$	$-0^m\ 52^s\ 0$	$+0^m\ 49^s\ 5$	$+1^m\ 41^s\ 5$	$+2^m\ 30^s\ 8$
$\vartheta - \frac{1}{2}I$,	$1^h\ 40\ 23\ 9$	$1^h\ 39\ 59\ 1$	$1^h\ 39\ 34\ 5$	$1^h\ 38\ 43\ 7$	$1^h\ 38\ 17\ 7$	$1^h\ 37\ 53\ 1$

with which we find the true values of I to be as follows:

$$I, \ -2^m\ 31^s\ 28 \ -1^m\ 41^s\ 10 \ -0^m\ 51^s\ 61 \ +0^m\ 50^s\ 55 \ +1^m\ 42^s\ 10 \ +2^m\ 31^s\ 52$$

Applying these to the observed times, and taking the means, we have—

East		West	
$T =$	$16^h\ 11^m\ 27^s\ 61$	$T' =$	$19^h\ 29^m\ 44^s\ 81$
$\Delta T =$	$+\ \ 2\ \ 0\ 35$	$\Delta T' =$	$+\ \ 2\ \ 0\ 94$
$T + \Delta T =$	$16\ \ 13\ \ 27\ \ 96$	$T' + \Delta T' =$	$19\ \ 31\ \ 45\ \ 75$
$\lambda =$	$0°\ \ 0'\ \ 37''$	$\vartheta =$	$24°\ 47'\ 13''.5$

With these we find, taking now $c = -2''.18$,

$$\varphi' = 54°\ 10'\ 50''\ 25$$

$$\frac{c \sin \varphi'}{\sin \delta} = \qquad -\ 2\ \ 26$$

$$b = \qquad -\ 1\ \ 91$$

$$\varphi = 54\ \ 10\ \ 46\ \ 08$$

The mean of the results in the two positions of the instrument is, therefore, $\varphi = 54°\ 10'\ 46''\ 77$. From numerous observations of the same kind, HANSEN found $\varphi = 54°\ 10'\ 46''\ 53$.

179 *To find the latitude when the instrument is reversed between the east and west transits of the same star on the same night.*—Reduce the observations to the middle thread, and let T and T' be the mean of the resulting clock times at the east and west transits, respectively. If the middle thread was north of the collimation axis at the east transit, it will be south of that axis at the west transit, and the interval $T' - T$ will be sensibly the same as the interval between the two transits over the collimation axis itself. We may, therefore, compute the latitude precisely as in the preceding method, and regard c as zero. Thus, our formulæ will be

$$\left.\begin{aligned} \vartheta &= \tfrac{1}{2}[(T' + \Delta T') - (T + \Delta T)] \\ \lambda &= \tfrac{1}{2}[\,T' + \Delta T' + T + \Delta T] - \alpha \\ \tan \varphi' &= \tan \delta \sec \vartheta \cos \lambda \\ \varphi &= \varphi' + b \end{aligned}\right\} \qquad (173)$$

in which b is the mean of the level determinations in the two positions of the axis, and is, therefore, free from the error of inequality of pivots. This method, then, enables us to obtain from the observations of a single night a value of the latitude free from all the instrumental errors.* We may remark here that the result by this method, as well as the mean of the results of two observations in reverse positions of the axis by the preceding method, is free from errors arising from flexure of the rotation axis.

EXAMPLE.—The following observations were taken at Cronstadt with a transit instrument in the prime vertical, the axis of which was reversed between the east and west transits.

1843, August 9. Cronstadt. Assumed $\phi = 59° 59'.5$

	Circle South	I	II	III	IV	V	Level
E	*γ Cassiopeæ*	$13^m\ 23^s$	$17^m\ 46^s$	$0^h\ 24^m\ 6^s$	$31^m\ 32^s$		$+5''.36$
	δ Cassiopeæ	20 32	23 6	0 26 21	29 19	$32^m\ 44^s$	$+5.56$
	Circle North						
W	*γ Cassiopeæ*	-	$1^m\ 2^s$	$1^h\ 9^m\ 55^s$	$15^m\ 26^s$	$20^m\ 21^s$	$-2''.10$, -2.08
	δ Cassiopeæ	$57^m\ 36^s$	0 45	2 4 11	7 0	9 50	-1.50, -1.10

* There is a theoretical inaccuracy in finding λ, since this quantity will be affected by the collimation error, but the error will have no sensible effect upon the cosine of so small a quantity, unless c is unusually large. It will, indeed, be always inappreciable when the observer has bestowed ordinary care upon the adjustment of the middle thread.

The level was observed before the east transit of γ *Cassiop* and after that of δ *Cassiop.* so that the mean $b = +\,5''.46$ will be used for both stars at the east transit But at the west transit the level was observed before and after each star: so that for γ *Cassiop.* at this transit we shall use $b = -\,2''.09$, and for δ *Cassiop*, $b = -\,1''.30$

The threads are numbered from the circle end of the axis, and thread I was first observed at both the east and west transits The equatorial intervals from the middle thread were—

	I	II	IV	V
(Circle North) i,	$+\,34^s.40$	$+\,18^s.74$	$-\,16^s.14$	$-\,33^s.33$

The collimation constant, as found from observations in the meridian, was $c = +\,4''.50$ (in arc) for "circle south"

The chronometer correction (sidereal) was $+\,30^s.20$ at $0^h\ 24^m$; its daily rate, $+\,0^s.90$

The apparent places of the stars for this date were—

	α	δ
γ *Cassiopeæ*,	$0^h\ 47^m\ 21^s.49$	$+\,59°\ 52'\ 2''.3$
δ *Cassiopeæ*,	$1\ \ 15\ \ 40.38$	$+\,59°\ 25\ \ 6.2$

To reduce the observations of γ *Cassiopeæ*, we first find the approximate value of ϑ from the difference of the observed times on the middle thread to be

$$\vartheta = 0^h\ 22^m\ 54^s.5$$

from which we find, by (172), the reductions of the side threads to the middle thread to be as follows

	I	II	IV	V
γ *Cassiop.* E	$+\,10^m\ 43^s.2$	$+\,6^m\ 19^s.7$	$-\,7^m\ 23^s.9$	——
" W	——	$+\,8\ \ 55.6$	$-\,5\ \ 32.2$	$-\,10^m\ 26^s.4$

Applying these, and proceeding by (173), we find,—

	East		West
I	$0^h\ 24^m\ 6^s.2$		$^h\ ^m\ ^s$
II	5.7		1 9 57 6
III	6 0		55 0
IV	8 1		53 8
V	——		54 6
$T=$	0 24 6 5	$T'=$	1 9 55 3
$\Delta T=$	+ 30 2	$\Delta T'=$	+ 30 2
$T+\Delta T=$	0 24 36 7	$T'+\Delta T'=$	1 10 25 5
	1 10 25 5		0 24 36 7
½ sum $=$	0 47 31 1	½ diff $=$	0 22 54 4
$\alpha=$	0 47 21 5	$=\vartheta=$	5° 43′ 36″.
$\lambda=$	9 6		
$=$	0° 2′ 24″		

$$\begin{array}{rl} \log\tan\delta & 0\ 2362409 \\ \log\sec\vartheta & 0\ 0021729 \\ \log\cos\lambda & 9\ 9999999 \\ \hline \log\tan\varphi' & 0\ 2384137 \\ \varphi' = & 59^\circ\ 59'\ 29''\ 78 \\ b=\frac{1}{2}(5''\ 46-2''\ 09) = & +\quad 1\ \ 69 \\ \hline \varphi = & 59\ \ 59\ \ 31\ \ 47 \end{array}$$

The observations of γ *Cassiopeæ*, reduced in the same manner, give $\varphi = 59^\circ\ 59'\ 30''\ 98$, and the mean is $\varphi = 59^\circ\ 59'\ 31''.23$

The preceding methods of reduction leave nothing to be desired when the intervals of the threads are known When, however, these are unknown, we may resort to one or the other of the following methods, according to the nature of the observation

180 *To find the latitude from the observed transits of a star over the prime vertical, east and west of the meridian, when the instrument is reversed only between the observations of different nights, the intervals of the threads being unknown*

Put

$c =$ the distance of any thread from the collimation axis,

$\vartheta_n = \frac{1}{2}$ the elapsed sidereal time between the east and west transits over the same thread when the circle or finder is north,

$\vartheta_s =$ ditto for the same star when the axis is reversed,

$b_n, b_s =$ the level constants in the two positions,

then, by (169) and (170), we shall have

$$\tan \varphi_n = \tan \delta \sec \vartheta_n \cos \lambda$$
$$\tan \varphi_s = \tan \delta \sec \vartheta_s \cos \lambda$$
$$\varphi = \varphi_n + b_n + \frac{c \sin \varphi_n}{\sin \delta}$$
$$\varphi = \varphi_s + b_s - \frac{c \sin \varphi_s}{\sin \delta}$$

The last two equations involve but two unknown quantities, φ and c, both of which may, therefore, be determined Put

$$\varphi_0 = \tfrac{1}{2}(\varphi_n + b_n + \varphi_s + b_s)$$
$$\gamma = \tfrac{1}{2}(\varphi_n + b_n - \varphi_s - b_s)$$

then our equations become

$$\varphi - \varphi_0 = \gamma + \frac{c \sin \varphi_n}{\sin \delta}$$
$$\varphi - \varphi_0 = -\gamma - \frac{c \sin \varphi_s}{\sin \delta}$$

Multiplying the first by $\sin \varphi_s$, the second by $\sin \varphi_n$, and adding them together, we find

$$\varphi - \varphi_0 = -\gamma \left[\frac{\sin \varphi_n - \sin \varphi_s}{\sin \varphi_n + \sin \varphi_s}\right] = -\gamma \tan \tfrac{1}{2}(\varphi_n - \varphi_s) \cot \tfrac{1}{2}(\varphi_n + \varphi_s)$$

Since γ is very nearly equal to $\frac{1}{2}(\varphi_n - \varphi_s)$, the second member of this equation involves the square of γ, and is, consequently, an exceedingly small quantity, in computing which we may, evidently, put $\gamma = \frac{1}{2}(\varphi_n - \varphi_s)$ and substitute φ for $\frac{1}{2}(\varphi_n + \varphi_s)$, whereby we obtain

$$\varphi = \varphi_0 - \tfrac{1}{4}\gamma^2 \sin 1'' \cot \varphi$$

This method may, therefore, be expressed by the following equations

$$\left.\begin{aligned} \tan \varphi_n &= \tan \delta \sec \vartheta_n \cos \lambda \\ \tan \varphi_s &= \tan \delta \sec \vartheta_s \cos \lambda \\ \varphi_0 &= \tfrac{1}{2}(\varphi_n + b_n + \varphi_s + b_s) \\ \Delta\varphi &= \tfrac{1}{4}(\varphi_n - \varphi_s)^2 \sin 1'' \cot \varphi \\ \varphi &= \varphi_0 - \Delta\varphi \end{aligned}\right\} \quad (174)$$

in which the assumed value of φ may be used in computing $\Delta\varphi$

181 In this form of the method, only *pairs* of observations of the same star made on different nights in reverse positions of the axis can be reduced But it often happens that the observation on a thread is lost, and the corresponding observation on

the same thread in the reverse position of the axis becomes useless In order to avail ourselves of every observation, we may, after a sufficient number of observations have been made on the same star, determine for this star the mean difference between φ and $\varphi_n + b_n$ and between φ and $\varphi_s + b_s$, and these differences may be used to reduce the observations on the several nights independently of each other Thus, if we put

$$\Delta_n \varphi = \varphi - (\varphi_n + b_n) = -\tfrac{1}{2}(\varphi_n - \varphi_s + b_n - b_s) - \Delta\varphi$$
$$\Delta_s \varphi = \varphi - (\varphi_s + b_s) = +\tfrac{1}{2}(\varphi_n - \varphi_s + b_n - b_s) - \Delta\varphi$$

each complete pair of observations on two nights furnishes a value of $\Delta_n\varphi$ and $\Delta_s\varphi$, and, the mean of all being taken, any individual observation may be reduced by the formulæ

$$\tan\varphi_n = \tan\delta\sec\vartheta_n\cos\lambda \qquad \varphi = \varphi_n + b_n + \Delta_n\varphi$$

or,

$$\tan\varphi_s = \tan\delta\sec\vartheta_s\cos\lambda \qquad \varphi = \varphi_s + b_s + \Delta_s\varphi$$

This method of reduction is given by Professor PEIRCE *

182 The quantity λ, which is the difference between the right ascension of the star and the mean of the sidereal times of observation on the same thread east and west of the meridian, should have the same or nearly the same value throughout the series of observations, since any change of sufficient magnitude to affect the value of $\cos\lambda$ sensibly will give different values of φ_n or φ_s, and, consequently also of $\Delta_n\varphi$ or $\Delta_s\varphi$, which are here supposed to be constant To secure this condition, the stability of the instrument in azimuth must be secured, or it must be verified and corrected from time to time by means of a terrestrial mark to which the middle thread is referred

183. The factor $\cos\lambda$ may be omitted (not only in this, but in all other methods) throughout the reduction of a series of observations where it can be regarded as constant, and a small correction for the azimuth of the instrument can be applied to the final mean latitude If we denote this mean by (φ), found by neglecting the factor $\cos\lambda$, the true latitude will be found by the formula -

$$\tan\varphi = \tan(\varphi)\cos\lambda$$

* In a memoir on the latitude of Cambridge, Mass , *Memoirs of Am Academy of Sciences*, Vol II p 183

or

$$\varphi = (\varphi) - \tfrac{1}{4}\lambda^2 \sin 1'' \sin 2\varphi \tag{175}$$

If the azimuth deviation a is required, it may be found by the second equation of (167), which gives, very nearly,

$$\sin a = \sin \lambda \sin \varphi \tag{176}$$

If the azimuth of the instrument is known independently of the observations for latitude, we have, by substituting a for $\lambda \sin \varphi$,

$$\varphi = (\varphi) - \tfrac{1}{2} a^2 \sin 1'' \cot \varphi \tag{176*}$$

184 The thread intervals may also be found, for the difference of the equations for φ, Art 180, gives

$$c = -\frac{(\varphi_n + b_n - \varphi_s - b_s) \sin \delta}{2 \sin \frac{1}{2}(\varphi_n + \varphi_s) \cos \frac{1}{2}(\varphi_n - \varphi_s)}$$

for which we may take

$$\left.\begin{aligned} c &= \frac{(\Delta_n\varphi + \Delta\varphi) \sin \delta}{\sin \varphi \cos \Delta_n\varphi} \\ \text{or, in most cases,} \quad c &= \frac{(\Delta_n\varphi + \Delta\varphi) \sin \delta}{\sin \varphi} \end{aligned}\right\} \tag{177}$$

This will give the distance of each thread (the middle thread included) from the collimation axis, whence we can deduce the distance of each from the middle thread

EXAMPLE —Let us apply this method to the reduction of the observations taken at Heligoland by HANSEN, given on p 249

Beginning with the observations of July 31, "circle north," we find ϑ_n for each thread by taking half the difference of the observed times on this thread, east and west, and correcting for the clock rate in the interval, which is here $+ 0^s 28$ The value of λ may be found accurately enough from the middle thread alone Thus we have

Mean of times on middle thread	$= 17^h\ 51^m\ \ 1^s 9$
Clock corr	$= \ \ +\ \ 1\ \ 48\ \ 0$
Sid time	$= 17\ \ 52\ \ 49\ \ 9$
Star's α	$= 17\ \ 52\ \ 34\ \ 4$
λ	$= \qquad\quad 15\ \ 5 = 0^\circ\ 3'\ 52''$

Hence we have log $\tan \delta \cos \lambda = 0\ 0996437$, which will be used for all the threads, the value of log $\cos \vartheta_n$ for each thread being subtracted from it to find log $\tan \varphi_n$, as follows:

Thread	ϑ_n	log cos ϑ_n	log tan ϕ_n	ϕ_n
I	$1^h\ 36^m\ 33^s\ 38$	9 9602592	0 1393845	54° 2′ 25″ 76
II	1 37 25 28	9 9595210	0 1401227	5 12 36
III	1 38 16 03	9 9587918	0 1408519	7 56 84
IV	1 39 8 18	9 9580351	0 1416086	10 47 43
V	1 39 58 38	9 9572996	0 1423441	13 33 16
VI	1 40 48 78	9 9565540	0 1430897	16 21 07
VII	1 41 36 03	9 9558485	0 1437952	18 59 87

From the observations of August 3, "circle south," we find

Mean of times on middle thread	=	$17^h\ 50^m\ 35^s\ 7$
Clock corr	=	+ 2 0 6
Sid time	=	17 52 36 3
α	=	17 52 34 4
log tan δ cos λ = 0 0996457 $\quad\lambda$	=	1 9 = 0′ 29″

Thread	ϑ_s	log cos ϑ_s	log tan ϕ_s	ϕ_s
I	$1^h\ 41^m\ 39^s\ 29$	9 9557996	0 1438461	54° 19′ 11″ 32
II	40 49 79	9 9565389	0 1431068	16 24 93
III	40 0 54	9 9572678	0 1423779	13 40 80
IV	39 8 54	9 9580299	0 1416158	10 49 07
V	38 19 04	9 9587483	0 1408974	8 7 11
VI	37 27 04	9 9594958	0 1401499	5 18 50
VII	36 37 79	9 9601968	0 1394489	2 40 30

With the assumed latitude $\varphi = 54°\ 10'\ 8$, we find log $\frac{1}{4}$ sin 1″ cot φ = 3 9419, and the computation of $\Delta\varphi$ for each thread is as follows·

Thread	$\phi_n - \phi_s$	log $(\phi_n - \phi_s)^2$	log $\Delta\phi$	$\Delta\phi$
I	— 16′ 45″ 56	6 0046	9 9465	0″ 88
II	— 11 12 57	5 6556	9 5975	0 40
III	— 5 43 96	5 0730	9 0149	0 10
IV	— 0 1 64	0 4296	4 3715	0 00
V	+ 5 26 05	5 0264	8 9683	0 09
VI	+ 11 2 57	5 6426	9 5845	0 38
VII	+ 16 19 .57	5 9820	9 9239	0 84

We have $b_n = -2'' 21$, $b_s = -1'' 91$, $\frac{1}{2}(b_n + b_s) = -2''.06$; and hence the several values of the latitude given by the different threads are found as follows

Thread	$\frac{1}{2}(\phi_n + \phi_s)$	ϕ_0	ϕ
I	54° 10′ 48″ 54	46″ 48	45 60
II	48 65	46 59	46 19
III	48 82	46 76	46 66
IV	48 25	46 19	46 19
V	50 14	48 08	47 99
VI	49 79	47 73	47 35
VII	50 09	48 03	47 19
		Mean =	46 74

Hence $\varphi = 54° \ 10' \ 46'' \ 74$, which agrees within 0″.03 with the result found on p 251 The slight difference is perhaps due to small errors in the thread intervals employed in the former method

The values of $\Delta_n\varphi$ and $\Delta_s\varphi$ for each thread may be found as follows

Thread	$\frac{1}{2}(\phi_n - \phi_s)$	$\frac{1}{2}(\phi_n - \phi_s + b_n - b_s)$	$\Delta_n\phi$	$\Delta_s\phi$
I	− 8′ 22″ 78	− 8′ 22″ 93	+ 8′ 22″ 05	− 8′ 23″ 81
II	− 5 36 29	− 5 36 44	+ 5 36 04	− 5 36 84
III	− 2 51 98	− 2 52 13	+ 2 52 03	− 2 52 23
IV	− 0 0 82	− 0 0 97	+ 0 0 97	− 0 0 97
V	+ 2 43 03	+ 2 42 88	− 2 42 97	+ 2 42 .79
VI	+ 5 31 29	+ 5 31 14	− 5 31 52	+ 5 30 76
VII	+ 8 9 79	+ 8 9 64	− 8 10 48	+ 8 8 80

When $\Delta_n\varphi$ and $\Delta_s\varphi$ have been thus determined from a considerable number of observations, their mean values may be used to reduce the observations of each night separately.

We may now also find the thread intervals themselves by the formula (177), which gives

	I	II	III	IV	V	VI	VII
c,	+ 32·37	+ 21·65	+ 11·08	+ 0·06	− 10·48	− 21·31	− 31·51

which are the distances from the collimation axis The equa-

torial intervals of the side threads from the middle thread are, therefore,

	I	II	III	V	VI	VII
i,	$+32^s.31$	$+21^s.59$	$+11^s.02$	$-10^s.54$	$-21^s.37$	$-31^s.57$

which agree with those given on p 249 as well as can be expected when but four observations on each thread have been taken

185 *To find the latitude from the observed transits of a star over the prime vertical when the instrument is reversed between the east and west transits, the intervals of the threads being unknown* —Let

$\tau, \tau' =$ the hour angles of the star on the same thread at the east and west transits,

then, c denoting the distance of the thread from the collimation axis, we have

$$-\sin c = \sin n \sin \delta - \cos n \cos \delta \cos (\tau - \lambda)$$
$$\sin c = \sin n \sin \delta - \cos n \cos \delta \cos (\tau' - \lambda)$$

the sum of which gives

$$\cot n = \tan \delta \sec \tfrac{1}{2}(\tau' - \tau) \sec [\tfrac{1}{2}(\tau' + \tau) - \lambda]$$

But by (167) we have

$$\cot n \cos \lambda = \tan (\varphi - \beta)$$

and therefore

$$\tan (\varphi - \beta) = \tan \delta \sec \tfrac{1}{2}(\tau' - \tau) \sec [\tfrac{1}{2}(\tau' + \tau) - \lambda] \cos \lambda$$

in which $\beta =$ inclination of the rotation axis, and in this case, if b and b' are the inclinations in the two positions, we take $\beta = \frac{1}{2}(b + b')$

If now, to avoid all further consideration of the clock rate, we suppose all the observed times to be reduced to some assumed epoch (T) at which the clock correction is ΔT, and put

$T, T' =$ the clock times on the given thread at the east and west transits, respectively, reduced for rate to the assumed epoch (T),

$T_0, T_0' =$ the same for the middle thread,

we have

$$\tau = T + \Delta T - \alpha \qquad \tau' = T' + \Delta T - \alpha$$

and, since the middle thread is very near the collimation axis,

$$\lambda = \tfrac{1}{2}(T_0' + T_0) + \Delta T - \alpha$$
$$\tfrac{1}{2}(\tau' - \tau) = \tfrac{1}{2}(T' - T) = \tfrac{1}{2}\text{elapsed sid. time,}$$
$$\tfrac{1}{2}(\tau' + \tau) - \lambda = \tfrac{1}{2}(T' + T) - \tfrac{1}{2}(T_0' + T_0)$$

Hence, if we adopt the following more simple notation,

$2\vartheta =$ the elapsed sidereal time between the east and west observations on the same thread $= T' - T$,

$t =$ the mean of the observed times on that thread $= \tfrac{1}{2}(T' + T)$,

$t_0 =$ the mean of the observed times on the middle thread $= \tfrac{1}{2}(T_0' + T_0)$,

and put

$$\gamma = t - t_0 \qquad\qquad \lambda = t_0 + \Delta T - \alpha$$

we shall have

$$\left.\begin{aligned} \tan\varphi' &= \tan\delta \sec\vartheta \sec\gamma \cos\lambda \\ \varphi &= \varphi' + \tfrac{1}{2}(b + b') \end{aligned}\right\} \quad (178)$$

This method of observation and reduction has the same advantage as that of Professor PEIRCE, in not requiring a knowledge of the thread intervals, and it further enables the observer to reduce each observation independently of all others, and thus to obtain a definite result from one night's work.

EXAMPLE.—Let us apply this method to the observations taken at Cronstadt, given on p. 252.

For the star γ *Cassiopeæ* we have but three threads to reduce, since thread I. was omitted at the west and thread V. at the east transit. For the others, we proceed as follows:

$t_0 =$	0^h	47^m	$0^s.5$		log tan δ	0.2362409
$\Delta T =$		$+$	30.2		log cos λ	9.9999999
Sid. time $=$	0	47	30.7		log tan δ cos λ	0.2362408
$\alpha =$	0	47	21.5			
$\lambda =$	0	0	9.2 $= 2' 18''$			

Neglecting the chronometer rate, which is insensible in these intervals, we have

	II	III	IV
t	$0^h\ 39^m\ 24^s$	$0^h\ 47^m\ 0^s.5$	$0^h\ 53^m\ 29^s$
$t - t_0 = \gamma$	0 7 36.5	0 0 0	0 6 28.5
ϑ	0 21 38	0 22 54.5	0 21 57
$\log\sec\gamma$	0.0002393	0.0000000	0.0001733
$\log\sec\vartheta$	0.0019377	0.0021732	0.0019949
$\log\tan\varphi'$	0.2384178	0.2384140	0.2384090
φ'	59° 59′ 30″.6	59° 59′ 29″.8	59° 59′ 28″.8

$$\begin{aligned} \text{Mean } \varphi' &= 59°\ 59'\ 29''.73 \\ \text{“} \quad b &= \underline{\quad + \quad 1.69} \\ \varphi &= 59 \quad 59 \quad 31.42 \end{aligned}$$

For δ *Cassiopeæ* we find, in like manner, $\lambda = 1'\ 27''$, $\log\tan\delta\cos\lambda = 0.2284381$; and from the several threads,

	I	II	III	IV	V
γ	$0^h\ 6^m\ 12^s$	$0^h\ 3^m\ 20^s.5$	$0^h\ 0^m\ 0^s$	$0^h\ 2^m\ 53^s.5$	$0^h\ 6^m\ 1^s$
ϑ	0 48 32	0 48 49.5	0 48 55	0 48 50.5	0 48 33
φ'	59° 59′ 28″.8	59° 59′ 30″.1	59° 59′ 28″.3	59° 59′ 29″.1	59° 59′ 28″.2

$$\begin{aligned} \text{Mean } \varphi' &= 59°\ 59'\ 28''.90 \\ \text{“} \quad b &= \underline{\quad + \quad 2.08} \\ \varphi &= 59 \quad 59 \quad 30.98 \end{aligned}$$

The mean result by the two stars is, then, $\varphi = 59°\ 59'\ 31''.20$, which differs only $0''.03$ from the result found on p. 254, where the thread intervals were used.

186. *To find the latitude from the observed transits of a star over the prime vertical, east and west of the meridian, when the instrument is reversed, at each transit, between the observations of the star on opposite sides of the prime vertical.* (STRUVE's method.)

When the star passes near the zenith, the intervals between its transits over the threads become sufficiently great to allow the observer to reverse the instrument between the observations on two threads. He may then, *first*, observe the star at the east transit on all the threads on one side of the middle thread or prime vertical, and, reversing the axis, *secondly*, observe the star on the same threads on the opposite side of the prime vertical, then, allowing the axis to remain in the last position, *thirdly*, observe the star at the west transit on the same threads, and then,

reversing the axis, *fourthly*, observe the star on the same threads on the same side of the prime vertical as at first By this mode of observation the same thread is alternately a north and a south thread at precisely the same distance from the collimation axis at each of the four observations made upon it Now, in the equation (166) we have $\tau - \lambda = \frac{1}{2}$ elapsed sidereal time between the east and west transits over the same thread in the same position of the axis so that, if we put

$t = \frac{1}{2}$ elapsed time between the two observations on a thread in one position of the axis,

$t' =$ ditto for the same thread in the reverse position of the axis,

we have, c being the distance of this thread from the axis,

$$-\sin c = \sin n \sin \delta - \cos n \cos \delta \cos t$$
$$\sin c = \sin n \sin \delta - \cos n \cos \delta \cos t'$$

the sum of which gives

$$\cot n = \tan \delta \sec \tfrac{1}{2}(t + t') \sec \tfrac{1}{2}(t - t')$$

But by (167) we have

$$\cot n \cos \lambda = \tan (\varphi - \beta)$$

in which for β we must here employ the mean of the level determinations in the two positions, or $\beta = \frac{1}{2}(b + b')$ Hence, denoting $\varphi - \beta$ by φ', we find

$$\left.\begin{aligned} \tan \varphi' &= \tan \delta \sec \tfrac{1}{2}(t + t') \sec \tfrac{1}{2}(t - t') \cos \lambda \\ \varphi &= \varphi' + \beta \end{aligned}\right\} \quad (179)$$

where λ will be the same for all the threads, and may be found with sufficient accuracy from any single thread by taking the difference between the right ascension of the star and the mean of the two sidereal times of observation on that thread.*

Each thread thus gives a value of the latitude free from all the instrumental errors The clock errors, however, have nearly the same effect as in all the other methods error in the clock *rate* affects t and t'; error in the clock *correction* affects λ.

When there is time, the middle thread may also be observed,

---

* Or we may neglect the factor $\cos \lambda$, and apply a correction to the final mean latitude, as in Art 183

once as a north thread and once as a south thread, and the latitude will be found from it, according to the method of the preceding article, by the formula

$$\tan \varphi' = \tan \delta \sec t \cos \lambda$$

where t will be one-half the elapsed sidereal time between the observations on the middle thread In taking the mean, the value of the latitude found from the middle thread should have but one-half the weight of the value on any other thread, since it depends on two observations instead of four.

This method is not much used in the field, as portable instruments, usually not very firmly mounted, and never provided with reversing apparatus, cannot be quickly reversed without risk of disturbing the azimuth.

EXAMPLE *—In the following observation, the axis was reversed immediately after the star had crossed the middle thread at the east transit, and was then left in the same position until after the star had crossed the middle thread at the west transit, when it was again reversed, and, consequently, restored to its first position

Cronstadt, August 16, 1843

δ Cassiopeæ		East transit	West transit
		$b = +1''7$	$b = +1''2$
	Thread	Chronometer	Chronometer
Circle S	I	$0^h\ 20^m\ 18^s5$	$2^h\ 9^m\ 50^s5$
	II	0 22 56	2 7 16
	III	0 26 9	
Circle N	III	.	2 4 0
	II	0 29 38	2 0 32
	I	0 32 45	1 57 24.
		$b = -2''.7$	$b = -1''6$

The chronometer correction at $1^h\ 15^m$ was $+ 40^s.1$, its daily rate, $+ 1^s74$ on sidereal time. The star's place was

$$\alpha = 1^h\ 15^m\ 40^s71 \qquad \delta = 59^\circ\ 25'\ 7''75$$

* SAWITSCH, *Pract Astron*, Vol I p 377

We find from the middle thread $\lambda = 3^s.9$, $\cos\lambda = 1$ The computation for the several threads may be arranged as follows

	I	II	III
Diff obs'd times S	$1^h\ 49^m\ 32^s\ 0$	$1^h\ 44^m\ 20^s\ 0$	$1^h\ 37^m\ 51^s\ 0$
Chron Rate	$+$ 0 1	$+$ 0 1	$+$ 0 1
Diff obs'd times N.	1 24 39 0	1 30 54 0	
Chron Rate	$+$ 0 1	$+$ 0 1	
$2t$	1 49 32 1	1 44 20 1	1 37 51 1
$2t'$	1 24 39 1	1 30 54 1	
$\frac{1}{2}(t+t')$	0 48 32 8	0 48 48 .55	0 48 55 55
$\frac{1}{2}(t-t')$	0 6 13 3	0 3 21 5	
$\log\sec\frac{1}{2}(t+t')$	0 0098171	9243	9722
$\log\sec\frac{1}{2}(t-t')$	0.0001600	0466	
$\log\tan\delta\cos\lambda$	0 2284455	4455	4455
$\log\tan\varphi'$	0 2384226	4164	4177
φ'	59° 59′ 31″ 61	30″ 33	30″ 60
β	$-$ 0 35	$-$ 0 35	$-$ 0 35
φ	59 59 31 26	29 98	30 25

Giving the value found from the middle thread but one-half the weight of either of the other two, the mean is $\varphi = 59° 59' 30'' 55$

187 *To find the latitude from stars observed at only one of their transits over the prime vertical.*—Notwithstanding the simplicity of the preceding methods, it is not always possible to apply them in the field If the observer has but a short time to remain at a station, he may fail to find a sufficient number of bright stars which pass near his zenith, and, if he uses those which pass at greater zenith distances, much time is lost in waiting. But if he can use stars observed at only one of their transits, he may in two or three hours obtain sufficient data for a very accurate determination of his latitude The following method is based upon that originally given by BESSEL,* with some modifications, which appear to me to facilitate its application.

If in the general equation (166), where c denotes the distance of a thread from the collimation axis, we substitute $i + c$ for this distance, denoting now by i the distance of the thread from the

* *Astron Nach*, Vol VI Nos 131 and 132.

mean thread, and by c the distance of the mean thread from the axis, we have

$$i + c = -\sin n \sin \delta + \cos n \cos \delta \cos (\tau - \lambda)$$

in which τ is the hour angle of the star, and n and λ are determined by the conditions (167).

Each thread gives an equation of this form The mean of these equations may be found by the aid of our Tables VIII and VIII.A, according to the method already explained in Art. 173. Thus, T being the mean of the observed times on the several threads, I the interval obtained by subtracting each observed time from the mean, [illegible] log k the mean of the several values of these quantities taken from Table VIII with the argument I, we have

$$T_1 = T + \varkappa$$

and, since here τ is the west hour angle,

$$\tau_1 = T_1 + \Delta T - \alpha$$

Then, i_0 denoting the mean of the equatorial distances of the threads from the mean thread, we have

$$c + i_0 = -\sin n \sin \delta + \frac{\cos n \cos \delta \cos (\tau_1 - \lambda)}{k}$$

or, putting

$$\gamma \cos \delta_1 = \frac{1}{k} \cos \delta$$

$$\gamma \sin \delta_1 = \sin \delta$$

the mean equation is

$$\frac{c + i_0}{\gamma} = -\sin n \sin \delta_1 + \cos n \cos \delta_1 \cos (\tau_1 - \lambda)$$

Developing $\cos(\tau_1 - \lambda)$, and substituting the values of $\sin n$, $\cos n \cos \lambda$, $\cos n \sin \lambda$, from (167),

$$\frac{c + i_0}{\gamma} = -h \cos(\varphi - \beta) \sin \delta_1 + h \sin(\varphi - \beta) \cos \delta_1 \cos \tau_1 + \sin a \cos b \cos \delta_1 \sin \tau_1$$

in which h and β are determined by the conditions

$$h \sin \beta = \sin b$$
$$h \cos \beta = \cos b \cos a$$

But, since we can always put $\cos b = 1$, these conditions give

$b = \beta \cos a$, and $h = \cos a$, and even if a were as great as 1° and $b = 20''$, we should have $b = \beta - 0''.003$ · so that we may always put $b = \beta$

We shall here assume that the instrument can be readily brought within 20′ of the prime vertical, and then we may safely take $h = \cos a = 1$, and substitute a for its sine Hence we have

$$\frac{c + i_0}{\gamma} = -\cos(\varphi - b)\sin\delta_1 + \sin(\varphi - b)\cos\delta_1\cos\tau_1 + a\cos\delta_1\sin\tau_1$$

Let φ_1 and z be determined by the conditions

$$\cos z \sin\varphi_1 = \sin\delta_1$$
$$\cos z \cos\varphi_1 = \cos\delta_1\cos\tau_1$$
$$\sin z = \cos\delta_1\sin\tau_1$$

then

$$\frac{c + i_0}{\gamma} = \sin(\varphi - \varphi_1 - b)\cos z + a\sin z$$

where $\varphi - \varphi_1 - b$ must be of the same order as a and $c + i_0$, and therefore may be substituted for its sine Again, since in this method of finding the latitude no observation will be regarded as having any value unless some threads on each side of the mean thread have been observed, i_0 will always be so small that no error will arise in practice by putting $\gamma = 1$.* Our equation is, therefore,

$$c + i_0 = (\varphi - \varphi_1 - b)\cos z + a\sin z$$

Now let

$$\varphi_0 = \text{the assumed latitude,}$$
$$a_0 = \text{the assumed azimuth of the instrument,}$$
$$\Delta\varphi,\ \Delta a = \text{the required corrections of these quantities,}$$

then, substituting $\varphi_0 + \Delta\varphi$ and $a_0 + \Delta a$ for φ and a, dividing the equation by $\cos z$, and denoting the known terms by f, *i e.* putting

$$f = \varphi_1 + b - \varphi_0 - a_0\tan z + i_0\sec z \tag{180}$$

we have

$$c\sec z - \Delta a\tan z - \Delta\varphi + f = 0 \tag{181}$$

which is the equation of condition furnished by each star. From all the equations thus formed, the most probable values of c, Δa, and $\Delta\varphi$ will be found by the method of least squares

---

* Should an extreme case occur where the true value of γ was required, it could readily be found by the equations $\gamma\cos\delta_1 = \frac{1}{k}\cos\delta$, $\gamma\sin\delta_1 = \sin\delta$

The values of φ_1 and z will be most readily found by the formulæ

$$\left.\begin{array}{l} \tan\varphi_1 = \tan\delta_1 \sec\tau_1 = k\tan\delta\sec\tau_1 \\ \tan z = \tan\tau_1 \cos\varphi_1 \end{array}\right\} \quad (182)$$

and it must be observed that $\tan z$ will be negative when $\tan\tau_1$ is negative, that is, when the star is east of the meridian The sign of the term $c\sec z$ must also be changed when the axis of the instrument is reversed

EXAMPLE —The following observations (among others) were taken by BESSEL with a very small portable transit instrument, for the express purpose of demonstrating the advantages of this method *

Munich, 1827, June 27

Circle North		I	II	III	IV	V	Level
π Lyræ	E.	48ᵐ 6ˢ 4	46ᵐ 54ˢ 4	11ʰ 45ᵐ 43ˢ 2	44ᵐ 31ˢ 2	43ᵐ 16ˢ 8	+4ᵈ 875
υ Herculis	W	9 36 4	11 38 4	12 13 36 8	15 34 8	17 35 6	+0 403
γ Cygni	E	29 38 0	28 47 2	12 27 55 2	27 2 6	26 8 0	+0 117
Circle South							
φ Herculis	W	44 47 2	43 19 2	12 41 49 2	40 17 2	38 37 6	—1 966
66 *Cygni*	E	48 40 8	50 5 6	12 51 31 2	52 59 6	54 32 8	—1 876

These observations were taken in the garden of Dr STEINHEIL's house, where the assumed latitude was 48° 8′ 40″

The chronometer was a pocket *mean time* chronometer of KESSEL Its correction to sidereal time at 12^h (by chron) was $\Delta T = + 5^h\ 1^m\ 3^s\ 31$,† and its rate on sidereal time was $+ 9^s\ 19$ per hour

The equatorial intervals of the threads from the mean of all, expressed in seconds of arc, were as follows, for *circle north*,

I	II	III	IV	V
+ 598″ 08	+ 303″ 09	+ 6″ 19	— 294″ 91	— 612″ 46

The value of one division of the level was 4″ 49 The pivots were of unequal thickness, the correction for which had been previously found to be — 1″ 89 for circle north

* *Astron Nach* , Vol IX p 415

† See the example on p 234.

The apparent places of the stars on the given date were as follows:

	α	δ
π *Lyræ*	$18^h\ 50^m\ 7^s.74$	$43°\ 43'\ 27''.72$
υ *Herculis*	15 57 27.55	46 31 23 21
γ *Cygni*	20 16 4.59	39 42 32 96
φ *Herculis*	16 3 21.85	45 23 40 03
66 *Cygni*	19 35 33.81	45 7 14 89

We shall illustrate the use of our formulæ by giving the reduction of the observations of π *Lyræ* in full. We have, employing the mean time columns of Table VIII,

π *Lyræ*	T	I	$\varkappa$	log k
I	$11^h\ 48^m\ 6^s.4$	$-2^m\ 24^s.0$	$-0^s.04$	0.0000239
II	46 54.4	-1 12.0	0.00	60
III	45 43.2	$-$ 0.8	0.00	0
IV	44 31.2	$+1$ 11.2	0.00	59
V	43 16.8	$+2$ 25.6	$+0.04$	244
Means	11 45 42.40		0.00	0.0000120

Hence we have

$$
\begin{aligned}
T_1 = T + \varkappa &= 11^h\ 45^m\ 42^s.40 \\
\Delta T &= 5\ \ \ 1\ \ \ 1.12 \\
\hline
T_1 + \Delta T &= 16\ \ 46\ \ 43.52 \\
\alpha &= 18\ \ 50\ \ \ 7.74 \\
\hline
\tau_1 &= -2\ \ \ 3\ \ 24.22 = -\ 30°\ 51'\ 3''.3
\end{aligned}
$$

log sec τ_1	0.0662574	log tan τ_1	n9.77621
log tan δ	9.9806553	log cos φ_1	9.82476
log k	0.0000120	log tan z	n9.60097
log tan φ_1	0.0469247	log sec z	0.03208

We shall assume $\varphi_0 = 48°\ 8'\ 40''$, $a_0 = 7'\ 52''$, as in the computation given by BESSEL,* and hence we have

* These quantities are, of course, arbitrary; but it simplifies the equations of condition to make them as nearly correct as possible. An approximate value of the azimuth may be found from any star by the formula $a_0 = (\phi_1 - \phi_0)\cot z$.

$$
\begin{array}{rrrrr}
\varphi_1 = & 48^\circ & 5' & 21'' & 64 \\
b = & & +\ 20 & & 00 \\
-\ a_0 \tan z = & +\ 3 & & 8 & 33 \\
\hline
 & 48 & 8 & 49 & 97 \\
f = & & + & 9'' & 97
\end{array}
$$

The equation of condition from π *Lyræ* is, therefore,

$$1\,0767\,c + 0\,3990\,\Delta a - \Delta\varphi + 9''\,97 = 0$$

In the same manner, the equations for the other sta
to be

$$
\begin{aligned}
1\,0269\,c - 0\,2336\,\Delta a - \Delta\varphi + 10''\,83 &= 0 \\
1\,1645\,c + 0\,5967\,\Delta a - \Delta\varphi + 15\ \ 93 &= 0 \\
-\,1\,0468\,c - 0\,3094\,\Delta a - \Delta\varphi - 17\ \ 01 &= 0 \\
-\,1\,0504\,c + 0\,3214\,\Delta a - \Delta\varphi - 12\ \ 62 &= 0
\end{aligned}
$$

From these five equations we find the normal equa

$$
\begin{aligned}
5\,7688\,c + 0\,8708\,\Delta a - 1\,1709\,\Delta\varphi + 71''\,46 &= \\
0\,8708\,c + 0\,7688\,\Delta a - 0\,7741\,\Delta\varphi + 12\ \ 16 &= \\
-\,1\,1709\,c - 0\,7741\,\Delta a + 5\,0000\,\Delta\varphi -\ \ 7\ \ 10 &=
\end{aligned}
$$

whence

$$c = -\ 12''\,19 \qquad \Delta a = -\ 4''\,09$$

$$\Delta\varphi = -\ \ 2''\,06 \text{ with the weight } 4\,203$$

Substituting these values in the equations of con
find the residuals as follows

v	vv
$-\ 2''\ 72$	7 40
$+\ 1\ \ 33$	1 77
$+\ 1\ \ 36$	1 85
$-\ 0\ \ 92$	0 85
$+\ 0\ \ 93$	0 86
$[vv] =$	12 73

The number of observations being $m = 5$, and the n
unknown quantities $\mu = 3$, the mean error ε of a singl
tion is

$$\varepsilon = \sqrt{\left(\frac{[vv]}{m-\mu}\right)} = 2''\,52$$

and the mean error of $\Delta\varphi$ is

$$\varepsilon_0 = \frac{2''\,52}{\sqrt{4\,203}} = 1''\,23$$

Hence we have, finally,

$$\varphi = 48^\circ\ 8'\ 37''\,94 \text{ with mean error } \pm 1''\,23$$

The true latitude, found by referring the position of the instrument to the Observatory of Munich, was 48° 8′ 39″ 50 Thus, five observations, taken within about one hour with a very small instrument, sufficed to determine the latitude within 1″ 5 From the observations of two other evenings combined with the above, the latitude found by BESSEL was 48° 8′ 40″ 08, which was only 0″ 58 in error

DETERMINATION OF THE DECLINATIONS OF STARS BY THEIR TRANSITS OVER THE PRIME VERTICAL

188 The transit of a star over the prime vertical has been used in the preceding articles to determine the latitude of the place of observation when the star's declination is known Conversely, if the latitude is otherwise known, the observation may be used to determine the star's declination The modifications of the formulæ given in Arts 177, &c., necessary for this purpose, are obvious

When the star passes very near to the zenith, the errors in the time of transit have comparatively small effect upon the computed declination. for, by differentiating the equation

$$\tan\delta = \tan\varphi\cos t$$

we find

$$d\delta = -\tfrac{1}{2}\sin 2\delta\tan t\ \ dt$$

so that the effect of a given error dt in the hour angle upon the computed declination diminishes with the hour angle itself

But an error in the assumed latitude φ is not eliminated, though in certain cases it will have less effect than in others, for we have

$$d\delta = d\varphi\ \frac{\sin 2\delta}{\sin 2\varphi}$$

The several values of the declination of the same star determined on different dates will, therefore, be affected by the con-

stant error depending upon the error in the latitude, but the differences in these values will nevertheless be accurately found Hence, the most important use of such observations is not so much to determine the absolute declination of a star as the changes of its declination resulting from aberration, nutation, and parallax

189 In order to eliminate the instrumental errors in the most complete manner, STRUVE proposed the system of observation given in Art 186, and, in order to facilitate the application of this system, he gave a new form to the instrument constructed under his direction for the Pulkowa Observatory,—a form which has since been adopted in other observatories

Plate VI exhibits the principal features of the Pulkowa prime vertical transit instrument,* made by REPSOLD The telescope TT is at the end of the horizontal axis DE, which rests in Vs at VV. The pier PP is of a single piece of stone The apparatus for reversing the instrument is permanently secured within the pier, as shown in the plate, the vertical rod R and its arms aa being raised by the crank f by means of the bevelled wheels e, and thus lifting the telescope out of the Vs When the telescope is lifted sufficiently to clear the Vs, it is revolved 180° (the exact semi-revolution being determined by a stop d), and is then again lowered into the Vs The time required in this operation is but 16 seconds, and if the astronomer has commenced an observation with the tube north, he can continue the observation with the instrument reversed, tube south, after 1 minute and 20 seconds, this time being sufficient for the observer to rise, unclamp the instrument, reverse it, and resume his position for the observation. Thus, even with an instrument of large dimensions, the system of observation given in Art 186 is easily carried out.

The pressure on the Vs is in part removed by the counterpoises WW acting at NN

The pressure on the two Vs is equalized by placing at D a weight equal to that of the telescope

The level LL may remain upon the axis during reversal

The finder F is similar to that described in Art 120

The reticule at the focus m contains 15 vertical threads and

* *Description de l'observatoire astronomique central de Poulkova* (St Petersburg, 1845), p 167.

two horizontal threads, as shown in Fig 2 All the transits over the vertical threads should be made to occur exactly midway between these two horizontal threads, the telescope being made to follow the star's change of altitude by a fine motion screw (not shown in the plate), the handle of which is within reach of the observer's hand The equatorial interval between the extreme vertical threads is 15′ 15″ or 61^s of time

There is also a movable micrometer thread parallel to the transit threads

The field is illuminated by light thrown through the horizontal axis and reflected by a mirror at *E* towards the reticule.

190 Example —The following observation was taken by Struve with the instrument above described *

1842 January 15 *o Draconis*

	East Vertical —5°.6 R		West Vertical —5° 4 R.	
	Tube S		*Tube S*	
Level	+ 40^d 35	— 35^d 8	+ 40 5	— 35 35
	40 4	35 8	40 55	35 35
	40 4	35 8	40 5	35 4
	40 4	35 8	40 45	35 4
Threads.				
I	$17^h\ 54^m\ 30^s$ 7		$19^h\ 42^m\ 51^s$ 4	
II	55 8 65		42 13 65	
III	55 44 4		41 38 0	
IV	56 22 25		40 59 85	
V	57 0 6		40 21 7	
VI	57 40 9		39 41 4	
VII	17 58 19 5		19 39 2 7	
	Tube N.		*Tube S*	
VII	$18^h\ 1^m\ 4^s$ 0		$19^h\ 36^m\ 17^s$ 85	
VI	1 45 5		35 37 0	
V	2 29 8		34 52 35	
IV	3 12 7		34 9 3	
III	3 57 6		33 24 7	
II	4 39 8		32 42 1	
I	18 5 26 35		19 31 55 6	
Level	+ 37^d 2	— 39^d 0	+ 37^d 25	— 38^d.7
	37 2	39 0	37 25	38 7
	37 2	39 0	37 3	38 7
	37 15	39 1	37 25	38 7

* *Astronomische Nachrichten*, Vol XX. p 209.

The value of one division of the level was $1''.002$. The latitude, $\varphi = 59° 46' 18''.00$. The correction of the interval between the east and west transits for the rate of the clock was $+ 0^s.09$. The temperature of the air is recorded at the time of the observation (in degrees of Réaumur), as the value of a division of the level depends in some degree upon it

According to formula (179), the declination will be found from these observations by the formula

$$\tan \delta = \tan \varphi' \cos \tfrac{1}{2}(t + t') \cos \tfrac{1}{2}(t - t')$$

where, β being the mean inclination of the axis, we have $\varphi' = \varphi - \beta$, $t = \frac{1}{2}$ elapsed time between the observations on the same thread for "tube south," t' = the same for "tube north" We omit the factor $\cos \lambda$, because a fixed instrument can always be adjusted so accurately that we can put $\cos \lambda = 1$

But, instead of computing δ directly by this formula, we may find an approximate value by using the constant value of φ in the second member, and then apply a correction for the inclination β. Thus, we find*

$$\left.\begin{aligned} \tan \delta' &= \tan \varphi \cos \tfrac{1}{2}(t + t') \cos \tfrac{1}{2}(t - t') \\ \Delta\delta &= \beta \frac{\sin 2\delta'}{\sin 2\varphi} \\ \delta &= \delta' + \Delta\delta \end{aligned}\right\} \qquad (183)$$

in which we make $\Delta\delta$ additive by supposing β to be positive when the *south* end of the axis is too high.

The distance c of any thread from the collimation axis may be found from the two equations

$$\begin{aligned} -\sin c &= \cos \varphi \sin \delta - \sin \varphi \cos \delta \cos t \\ \sin c &= \cos \varphi \sin \delta - \sin \varphi \cos \delta \cos t' \end{aligned}$$

the difference of which gives

$$\sin c = - \sin \varphi \cos \delta \sin \tfrac{1}{2}(t + t') \sin \tfrac{1}{2}(t - t') \qquad (184)$$

* We have $\dfrac{\tan \delta}{\tan \delta'} = \dfrac{\tan \phi'}{\tan \phi}$, whence we readily deduce

$$\sin (\delta - \delta') = \sin (\phi' - \phi) \frac{\sin (\delta + \delta')}{\sin (\phi + \phi')}$$

which gives the formula for $\Delta\delta$ used in the text, when its sign is changed for the reason given

The computation of the preceding observation may be arranged in the following form

	I	II	III	IV	V	VI	VII
W — E $2t$	$1^h\ 48^m\ 20^s\ 79$	$47^m\ 5^s\ 09$	$45^m\ 53^s\ 69$	$44^m\ 37^s\ 69$	$43^m\ 21^s\ 19$	$42^m\ 0^s\ 59$	$40^m\ 43^s\ 29$
W — E $2t'$	1 26 29 34	28 2 39	29 27 19	30 56 69	32 22 64	33 51 59	35 13 94
$\frac{1}{2}(t + t')$	0 48 42 53	48 46 87	48 50 22	48 53 60	48 55 96	48 58 05	48 59 31
$\frac{1}{2}(t - t')$	0 5 27 86	4 45 67	4 6 62	3 25 25	2 44 64	2 2 .25	1 22 34
$\log \cos \frac{1}{2}(t' + t)$	9 9901167	0871	0642	0411	0249	0106	0020
$\log \cos \frac{1}{2}(t' - t)$	9 9998765	9063	9301	9516	9689	9828	9922
$\log \tan \phi$	0 2345728	5728	5728	5728	5728	5728	5728
$\log \tan \delta'$	0.2245660	5662	5671	5655	5666	5662	5670
δ'	59° 11′ 39″ 00	39″ 04	39″ 23	38″ 90	39″ 12	39″ 04	39″ 21

$$\beta = +\ 0''\ 806 \qquad \begin{aligned} \text{Mean } \delta' &= 59^\circ\ 11'\ 39''\ 077 \\ \Delta\delta &= \underline{\qquad\quad +\ \ 0\ \ 815} \\ \delta &= 59\ \ 11\ \ 39\ \ 892 \end{aligned}$$

By comparing the mean value of δ' with the several values found from the different threads, we find the probable error of a single determination by one thread in the four positions is in this case only 0″ 08. This observation, however, was taken when the atmosphere was unusually steady From a discussion of the observations of 29 days on this star, STRUVE finds the probable error of a single determination by one thread to be 0″ 125, and that of the mean of seven threads, consequently, only 0″ 047. To this is to be added the probable error of the level determination, which, from the above example, is evidently exceedingly small STRUVE concludes that, under the most favorable conditions of the atmosphere, the declination is determined by this method with a probable error of not more than 0″.05, and in average circumstances with a probable error under 0″ 1

191 If we wish to compute the time of the transit of the star over the meridian of the instrument from these observations with the utmost rigor, we must take into account the difference of level at the east and west transits over the prime vertical. The effect of a difference of level is the same as that of a difference of latitude: hence, differentiating the equation

$$\cos \tau = \tan \delta \cot \varphi$$

in which τ is the hour angle at the west transit, we have

$$15\,\Delta\tau = \frac{\Delta\varphi \tan \delta}{\sin^2 \varphi \sin t} = \frac{\Delta\varphi \sin \delta}{\sin \varphi \sqrt{[\sin(\varphi + \delta)\sin(\varphi - \delta)]}}$$

The mean of the times of transit over the east and west vertical, or T_0, will be increased by $\frac{1}{2}\Delta\tau$ Putting then $\beta' - \beta$ for $\Delta\varphi$, the correction of the time T_0 will be expressed by the formula

$$\Delta T_0 = \frac{(\beta - \beta') \sin \delta}{30 \sin \varphi \sqrt{[\sin(\varphi + \delta) \sin(\varphi - \delta)]}} \tag{185}$$

Thus, in the preceding observations, we have at the east transit $\beta = + 0'' 689$, and at the west transit $\beta' = + 0'' 924$, and

$$\beta - \beta' = - 0'' 235 \qquad \begin{array}{rl} (T_0) = & 18^h\ 48^m\ 41^s\ 09 \\ \Delta T_0 = & - \qquad\quad 0\ 08 \\ \hline \text{Corrected } T_0 = & 18\ \ 48\ \ 41\ 01 \end{array}$$

We can now find the exact azimuth of the instrument The clock correction at $18^h\ 48^m$ was $+ 8^s\ 31$, and the apparent right ascension of *o Draconis* was $18^h\ 48^m\ 50^s\ 17$ hence

$$\begin{array}{rl} \text{Sid time} = & 18^h\ 48^m\ 49^s\ 32 \\ \alpha = & 18\ \ 48\ \ 50\ 17 \\ \hline \lambda = & - \qquad\quad 0\ 85 = - 12''\ 75 \text{ in arc,} \end{array}$$

where λ is the angle which the meridian of the instrument makes with the true meridian Hence, a being the azimuth of the rotation axis, we have, by the formula $a = \lambda \sin \varphi$,

$$a = - 11'' 0$$

Finally, if we wish to determine the effect of the azimuth upon the observed declination, we have the formula

$$\tan \delta = \frac{\tan \delta_1}{\cos \lambda}$$

in which δ_1 is the declination deduced by assuming $\cos \lambda = 1$, and δ is the true declination. From this we readily deduce

$$\delta - \delta_1 = (\tfrac{1}{2}\lambda)^2 \sin 1'' \sin 2\delta \tag{186}$$

and hence, in the above example,

$$\delta - \delta_1 = 0'' 00017$$

which is altogether insignificant

192 The extreme precision of the method is evident from the above example Nevertheless, there remains yet a doubt as to

the perfect accuracy of the declination deduced, arising from the possibility of a change of azimuth between the east and west transits It is evident from the formula

$$\sin c = -\sin n \sin \delta + \cos n \cos \delta \cos (\tau - \lambda)$$

that an increase of λ by the quantity $\Delta\lambda$ has the same effect as an equal decrease of the hour angle τ, and a change of $-\Delta\lambda$ in τ produces a change of $-\frac{1}{2}\Delta\lambda$ in the hour angles used in computing δ To find the effect of this upon the computed δ, we have, by differentiating the equation

$$\cos \tau = \tan \delta \cot \varphi$$

with reference to τ and δ,

$$\Delta\delta = -\Delta\tau \cos^2 \delta \tan \varphi \sin \tau$$

or, putting $\frac{1}{2}\Delta\lambda$ for $-\Delta\tau$, and eliminating τ,

$$\Delta\delta = \tfrac{1}{2}\Delta\lambda \; \frac{\cos \delta \sqrt{[\sin (\varphi + \delta) \sin (\varphi - \delta)]}}{\cos \varphi}$$

$$= \Delta a \; \frac{\cos \delta \sqrt{[\sin (\varphi + \delta) \sin (\varphi - \delta)]}}{\sin 2\varphi} \qquad (187)$$

The following table, computed by this formula, is given by STRUVE to exhibit the effect of a change of azimuth $\Delta a = 1''$, for different values of $\varphi - \delta$

$\varphi - \delta$	$\Delta\delta$
0° 0′	0″ 000
0 20	0 042
0 40	0 060
1 0	0 074
2 0	0 108
3 0	0 136
4 0	0 162

The values of $\Delta\delta$ here increase very nearly as $\sqrt{\varphi - \delta}$. For *Draconis*, the correction would be $\Delta\delta = 0'' 055$. STRUVE investigated the probability of a change of azimuth occurring in his instrument He found that the fluctuations of the azimuth during

a whole year had not probably exceeded one second of arc on either side of its mean value, and that even the extreme changes of temperature from winter to summer had not produced any sensible effect upon it. Hence he concludes that since the temperatures at the east and west transits of a star on the same day never differed by more than 2° R. or $4\frac{1}{2}$° Fahr., and generally but a fraction of a degree, the variations of the azimuth could not have produced any error which amounted to even 0″.01. It is important to observe that, during the period referred to, the screws for adjusting the azimuth were not touched.

193. *Micrometer observations in the prime vertical.*—When a star passes within a few minutes of the zenith, its *lateral* motion (across the threads) becomes so slow that the observation of the transit over the side threads would occupy too much time. The star may indeed be within the limits of the extreme threads during the whole time from its east to its west transit. In such cases, the movable micrometer thread takes the place of the fixed threads. This may be used in two ways: either by setting the micrometer successively upon round numbers, identical before and after reversing, in which case the observations are reduced precisely as those made on fixed threads; or by setting at pleasure and as often as the time permits, in which case the observations are reduced as follows.

The micrometer reading for the case when the movable thread is in the collimation axis is known approximately: let its assumed value be denoted by M, and its true value by $M + c$. Let us suppose that for "tube south" the micrometer readings increase as the thread is moved towards the north; then, if m is the reading at an observed transit, the thread is at the distance $m - (M + c)$ *north* of the collimation axis, and this distance is to be substituted for c in our fundamental equation (166). In this equation, we shall also put $\lambda = 0$, $n = 90° - \varphi$, on the supposition that the azimuth and inclination of the axis are each zero, since the resulting declination may be corrected by the methods above explained. We have then

$$\begin{aligned}\sin(m - M - c) &= -\cos\varphi\sin\delta + \sin\varphi\cos\delta\cos\tau \\ &= \sin(\varphi - \delta) - 2\sin\varphi\cos\delta\sin^2\tfrac{1}{2}\tau\end{aligned}$$

or, since in the case here considered $\varphi - \delta$ is but a few minutes,

$$m - M - c = \varphi - \delta - \frac{2 \sin \varphi \cos \delta \sin^2 \frac{1}{2}\tau}{\sin 1''}$$

For convenience in computation, let us put

$$e = M - m$$
$$z = \varphi - \delta$$
$$R = \frac{2 \sin^2 \frac{1}{2}\tau}{\sin 1''} \sin \varphi \cos \delta$$

in which $\sin \varphi \cos \delta$ will be constant, and log $\frac{2 \sin^2 \frac{1}{2}\tau}{\sin 1''}$ may be taken directly from our Table VI, then the equation becomes

$$z + c = R - e \tag{188}$$

in which e is given by the observation for each thread, and R is to be computed for the several values of τ found from the observed sidereal times and the star's right ascension

This equation applies to the case of "tube south" When we have "tube north," the equation becomes

$$-m + M + c = \varphi - \delta - \frac{2 \sin \varphi \cos \delta \sin^2 \frac{1}{2}\tau}{\sin 1''}$$

so that, putting in this case

$$e' = m - M$$

we have

$$z - c = R - e' \tag{189}$$

The instrument is reversed but once The first series of observations is taken before the meridian passage, and the second after it We thus find from the means of the observations the values of $z + c$ and $z - c$, whence both z and c. The uncorrected declination is then

$$\delta = \varphi - z$$

to which we apply the correction for the level, as in Art 190, and, if necessary, also the correction for the azimuth according to (186)

It is evident that this method may be applied even to stars whose declinations are somewhat greater than the latitude

EXAMPLE —The following observations are given by STRUVE from among those taken with the Pulkowa instrument:*

* *Astr Nach*, Vol XX p 217

1842, January 15 *v Ursæ Majoris*

	East Vertical		(-6° 5 R) West Vertical	
	Tube S		*Tube N*	
Level	$+40^d$ 25	-37^d 3	$+38^d$ 0	-39^d 7
	40 3	37 35	38 0	39 7
	40 3	37 35	38 0	39 7
	40 3	37 35	38 0	39 7
	Transits	Microm	Transits	Microm
	9^h 30^m 29^s	9^r 315	9^h 48^m 42^s 5	14^r 771
	30 56 5	9 550	48 14	14 527
	31 24 5	9 775	47 46	14 276
	32 0	10 083	47 17	14 068
	32 28	10 298	46 44	13 825
	32 54	10 470	46 9	13 597
	33 29	10 691	45 35	13 361
	34 4	10 879	45 11	13 232
	34 37	11 062	44 40	13 077
	9 35 11	11 226	9 44 12	12 942
Level	$+40^d$ 3	-37^d 25	$+38^d$ 0	-39^d 7
	40 35	37 3	38 0	39 7
	40 35	37 25	38 0	39 7
	40 25	37 3	38 0	39 7

$$\beta = +0^d\,323 = +0''\,324$$

In these observations, in order to avoid any possible error of ost motion in the micrometer screw, the thread is always set in dvance of the star by a final *positive* motion of the screw, that is, y that motion which increases the readings

The value of a revolution of the micrometer screw was found y the formula

$$r = 28''\,682 + 0''\,000292\,(9\,6 - T)$$

1 which T is the temperature indicated by the Réaumur ther-1ometer, and, since in this example $T = -6^\circ\,5$, we employ

$$r = 28''\,6867 \qquad \log r = 1\,45768$$

'he apparent position of the star on January 15, 1842, was, ccording to ARGELANDER's Catalogue,

$$\alpha = 9^h\,39^m\,46^s\,1 \qquad \delta = 59^\circ\,46'\,24''$$

The clock was slow 8^s 3, and hence the clock time of the star's ilmination was 9^h 39^m $37^s.8$, for which we may, for simplicity, ike 9^h 39^m 38^s, since a small error in this quantity will not affect

the final value of z when the hour angles on the opposite sides of the meridian are so nearly equal as in the present case

With the value $\varphi = 59° 46' 18''$, we find $\log \sin\varphi \cos\delta = 9\ 63846$ The assumed value of $M = 12^r\ 000$, and hence the observations may be reduced as follows

Tube S

τ	$\log \frac{2 \sin^2 \frac{1}{2}\tau}{\sin 1''}$	R	$m - M$	$\log(m - M)$	e	$R - e = z + c$	Diff from mean
$-9^m\ 9^s$	2 21581	71″ 49	2ʳ 685	0 42894	77″ 02	− 5″ 53	− 0″ 09
8 41 5	2 17118	64 51	2 450	0 38917	70 28	5 77	− 0 33
8 13 5	2 12325	57 77	2 225	0 34733	63 83	6 06	− 0 62
7 38	2 05842	49 76	1 917	0 28262	54 99	5 23	+ 0 21
7 10	2 00363	43 86	1 702	0 23096	48 82	4 96	+ 0 48
6 44	1 94946	38 72	1 530	0 18469	43 89	5 17	+ 0 27
6 9	1 87075	32 30	1 309	0 11694	37 55	5 25	+ 0 19
5 34	1 78420	26 46	1 121	0 04961	32 16	5 70	− 0 26
5 1	1 69385	21 49	0 938	9 97220	26 91	5 42	+ 0 02
4 27	1 58974	16 91	0 774	9 88874	22 20	5 29	+ 0 15
					Mean	− 5 438	

Tube N

			$M - m$			$z - c$	
$+4^m\ 34^s$	1 61222	17″ 81	0ʳ 942	9 97405	27″ 02	− 9″ 21	− 0″ 03
5 2	1 69673	21 64	1 077	0 03222	30 90	9 26	− 0 08
5 33	1 78160	26 31	1 232	0 09061	35 34	9 03	+ 0 15
5 57	1 84204	30 23	1 361	0 13386	39 04	8 81	+ 0 37
6 31	1 92105	36 27	1 597	0 20330	45 81	9 54	− 0 36
7 6	1 99551	43 05	1 825	0 26126	52 35	9 30	− 0 12
7 39	2 06031	49 98	2 068	0 31555	59 32	9 34	− 0 16
8 8	2 11352	56 49	2 276	0 35717	65 29	8 80	+ 0 38
8 36	2 16198	63 16	2 527	0 40261	72 49	9 33	− 0 15
9 4 5	2 20867	70 33	2 771	0 44264	79 49	9 16	+ 0 02
					Mean	− 9 178	

Hence we have

$$
\begin{array}{lrl}
\text{Tube } S & z + c = & -\ 5''\ 438 \\
\text{“}\quad N & z - c = & -\ 9\ \ 178 \\
 & z = & -\ 7\ \ 308 \qquad c = +\ 1''\ 870 \\
 & \varphi = & 59°\ 46'\ 18''\ 000 \\
 & \delta = \varphi - z = & 59\ \ 46\ \ 25\ \ 308 \\
\text{Corr for incl of the axis} & = & \qquad +\ \ 0\ \ 324 \\
 & \delta = & 59\ \ 46\ \ 25\ \ 632
\end{array}
$$

From the differences in the last column of this computation, we find the probable error of a single observation to be 0″ 194, produced by the error of observation and the error of the micrometer This agrees well with the probable error found for *o Draconis*, which was 0″ 08 for four observations on one thread.

The probable error of four observations of *υ Ursæ Majoris* is $0''.194 \div 2 = 0''.097$, which is somewhat greater than $0''.08$, apparently because it involves the additional error of the micrometer.

The probable error of the mean value of z or of the value of δ found by the preceding micrometer observations is $0''.194 \div \sqrt{20} = 0''.043$. The results obtained by the micrometer have, therefore, very nearly the same degree of precision as those obtained by the fixed threads, when each method is skilfully applied.

The extreme precision of the observations with this instrument in the hands of STRUVE is strikingly exhibited in the accordance of the values of the aberration constant determined from the changes of declination of seven stars, which have already been cited in Vol. I. Art. 440.

CHAPTER VI.

THE MERIDIAN CIRCLE.

194. THE *Meridian Circle*, or *Transit Circle*, is a combination of a transit instrument and a graduated vertical circle. This circle is firmly attached at right angles to the horizontal axis, and is read by verniers or microscopes (see Arts. 18 and 21), which are in some cases attached to the piers, and in others to a frame which rests upon the axis itself.

By means of this combination, the instrument serves to determine both co-ordinates of a star's position,—the right ascension from the time of its transit, and the declination from the zenith distance measured with the circle; or, if the star's place is given, it serves to determine either the local time or the latitude of the place of observation.

For the measurement of declinations, it takes the place of the *Mural Circle*, which consists of a circle mounted upon one side of a pier, the circle being secured to the end of a horizontal axis which enters the pier. As the latter instrument cannot be reversed, and its axis is not symmetrically supported, it is not suited to the accurate determination of right ascensions, and is to be

regarded as designed solely for the measurement of declinations Even for this purpose the meridian circle is preferable, as it admits of reversal; and there is always an advantage in combining determinations made in reverse positions of an instrument, whereby unknown errors may be either wholly or in part eliminated I shall, therefore, not treat specially of the mural circle It is not probable that any more instruments of that form will hereafter be constructed, and the method of using those that exist will readily be understood by any one who has mastered the meridian circle

195 Plates VII, VIII, and IX represent a meridian circle of REPSOLD, belonging to the U S Naval Academy, and mounted at Annapolis in 1852 It is almost identical in form with the meridian circles constructed by the same artist for STRUVE and BESSEL at the Pulkowa and Konigsberg Observatories

It has two circles, CC and $C'C'$, of the same size, but only one of these, CC, is graduated finely, this is read by four microscopes, two of which are seen at RR The microscopes are carried upon a square frame which is centred upon the rotation axis itself the form of this frame is shown in Plate IX, where the instrument is represented upon the reversing car The horizontal sides of the frame carry two spirit levels l, l, by which any change of inclination of the frame with respect to the horizon may be detected

The second circle $C'C'$, constructed of the same size as the first for the sake of symmetry, is graduated more coarsely, is read at either of two points, and is used only as a finder

The counterpoises WW act at XX, points nearly equidistant between the telescopes and the Vs, and very near to the circles; an arrangement which prevents the possibility of any appreciable flexure in the horizontal axis, at the same time that the pressure on the Vs is reduced to a very small quantity

The inclination of the rotation axis is measured with a *hanging* level LL

An arm FG, turning upon a joint at F, receives, when horizontal, an arm which is connected with a collar upon the rotation axis By turning a screw, the head of which is at G, the telescope is clamped in the collar, and then a screw (not seen in the drawing) acting horizontally near G gives fine motion to the telescope by acting upon the vertical arm

Another arm *fg*, nearly similar in its form and arrangement to *FG*, receives a vertical arm attached to the microscope frame Screws acting horizontally at *g* upon the vertical arm serve to adjust the frame

These arms are shown in Plate VIII as they appear when thrown down and out of use while the instrument is being reversed In this plate is also seen the arrangement of the vertical arms and the friction rollers by which the counterpoises act upon the horizontal axis, together with the form of the Vs

The field is illuminated by light thrown into the interior of the telescope through tubes at *AA* and reflected towards the reticule by a mirror in the central cube The quantity of light is regulated by revolving discs with eccentric apertures at the extremities of the tubes nearest to the Vs These discs are revolved by means of a cord to which hangs a small weight *S*

The reticule at *m* contains seven transit threads and three micrometer threads at right angles to the transit threads These three threads have a common motion, their distance from each other being constant This distance being known, an observation on either of the extreme threads can be reduced to the middle thread The micrometer thus arranged is intended for the measurement of small differences of declination, and also for the measurement of absolute declinations when used in conjunction with the graduated circle, as will be fully explained hereafter

The graduated circle of this instrument is nearly 30 inches in diameter, and reads directly to 2″ by the graduations on the micrometer heads of the reading microscopes, and by estimating the fraction of a graduation of the micrometer head, the reading is carried down to 0″.2 This is a sufficiently great degree of accuracy of reading to correspond to the dimensions and optical power of this instrument, but in larger instruments the reading is sometimes carried down to 0″ 05, or even less

The discussion of the errors of the circle of this instrument is given in Arts 28, 32, and 33.*

* The errors of the circle may not be constant, since they may fluctuate with the temperature of its various parts We may, however, assume that the errors at different temperatures will be the same, provided the expansion of the circle for an increase of temperature is uniform throughout all its parts For the greatest precision, therefore, we should endeavor to secure this condition of *uniform temperature*,

A mercury collimator should be placed permanently beneath the floor directly under the centre of the instrument, covered by a movable trap-door

I proceed to consider the methods of observing with the meridian circle Its application as a transit instrument will be sufficiently clear from the preceding chapter It is necessary to treat here only of the use of the circle and micrometer in the measurement of nadir distance, zenith distance, polar distance, or altitude of a star, from which either the declination of the star or the latitude is found.

196 *Nadir point* —The first of the methods of using the instrument which I shall treat of is that in which all observations with the circle are referred to the nadir Let us first suppose the instrument to be perfectly adjusted in the meridian, and the observation of a star to be made at the instant of its transit The nadir point is obtained by directing the telescope vertically towards the mercury collimator To take the simplest case, let us suppose the sight line to be determined by a fixed horizontal thread (at right angles to the transit threads) Let this thread be brought into coincidence with its reflected image The sight line is then vertical, and the reading of the circle (by which we always understand the mean of all the microscopes added to the degrees and minutes under the first microscope, or microscope *A*) represents the nadir point of the circle Let this reading be denoted by C_0 The telescope being then directed towards a star, and the fixed horizontal thread being made to bisect the star at the instant of the transit over the middle vertical thread, let the circle reading be C' Then the apparent nadir distance of the star, which I shall denote by N', will be

$$N' = C' - C_0$$

and, for this purpose, it is advisable to make the piers sufficiently high and broad to protect the whole circle, for, since the temperature of the piers will often differ from that of the circle, the radiation from them will tend to produce unequal temperatures in the different parts of the circle, unless the latter is equally exposed to this radiation throughout But even this arrangement will fail of its object if the temperature of the piers is not uniform, and therefore they must be protected against fluctuations of temperature as much as possible, for example, by first coating them with oil or some other preparation to exclude moisture, then wrapping them in cloth, and finally encasing them in wood, as proposed by Dr. Gould for the meridian circle of the Dudley Observatory

and this distance is usually reckoned from 0° to 360° from the nadir, through either the south point or the north point, according to the direction in which the graduations increase This direction is different in the two positions of the rotation axis Supposing the position of the axis to be indicated by that of the circle itself, let us assume that the nadir distance is reckoned through the *south* point for *circle east*, and through the north point for *circle west* If we denote the apparent zenith distance of the star *south* of the zenith by z', we shall then have

$$z' = \pm (180° - N') \quad \left\{ \begin{array}{l} + \text{ for circle east} \\ - \text{ for circle west} \end{array} \right\}$$

In obtaining the circle readings C_0 and C', the correction for *error of runs*, when such error exists, must be applied as explained in Art. 22. But, with the aid of the telescope micrometer, we can avoid the error of runs, as follows In observing the nadir point, set the circle so that an exact division is under or nearly under the zero of one of the reading microscopes, that is, so that all the microscopes will read nearly 0″ their mean will not require any sensible correction for runs But the fixed thread will then not be in coincidence with its image Measure the distance of the fixed thread from its image by the micrometer One-half this distance, being applied to the circle reading, will give the reading for absolute coincidence In like manner, in observing the star, set the circle again upon an exact division, and bisect the star with the micrometer thread, the distance of the micrometer thread from the fixed thread, being applied to the circle reading, will give the required reading C'

But, when the micrometer is employed, it is altogether preferable to dispense with the fixed thread and to depend solely upon the movable one Thus, to determine the nadir point, having brought the circle division which is nearest to the nadir point reading under microscope A, let the mean reading obtained from all the microscopes be called C_0 Bring the micrometer thread into coincidence with its image, and let the micrometer reading be M_0, which we shall suppose to be converted into arc by multiplying by the value of a revolution found according to Art. 46 or 47 It is now evident that when the telescope is directed upon a star, if the micrometer reading remains M_0 while the thread bisects the star and the circle reading is C', the nadir distance is $C' - C_0$, precisely as if the micrometer thread were

fixed But the reading C' will, in general, involve an error of runs, to avoid which, set the circle as before upon a neighboring exact division, and let the reading be still called C', then bisect the star with the micrometer thread, and let the reading be M', the nadir distance of the star will be

$$N' = (C' - C_0) + (M' - M_0) \tag{190}$$

In practice, this method will be found much simpler than it at first appears The finder should always be adjusted so that whole minutes in its reading correspond to whole minutes of the principal circle Then, in all observations of the nadir point, we set the finder to the same exact division and, in observing the star, we compute its approximate nadir distance to the nearest minute, and set the finder upon this minute

In the above formula, we suppose the micrometer readings to increase with the circle readings

EXAMPLE —On May 4, 1856, the telescope of the Meridian Circle of the Naval Academy was directed to the nadir by setting the finder upon 0° 0′, and the mean of the four microscopes gave the circle reading

$$C_0 = 359° \ 59' \ 54'' 70 \ (\text{or} - 0° \ 0' \ 5'' \ 30)$$

The micrometer thread was then brought alternately north and south of its own image in the collimator, so as to form each time a square with the middle transit thread and its image (as in Art 147), and the micrometer readings were as follows.

Image N	S	Means
$5^r \ 33^d \ 4$	$40^d \ 8$	$5^r \ 37^d \ 10$
32 9	40 4	36 65
33 0	40 3	36 65
33 5	40 5	37 00
		$M_0 = 5^r \ 36^d \ 85$

so that M_0 was the reading when the micrometer thread was in coincidence with its image.

The telescope was then directed to *Polaris* at its upper culmination by setting the finder at 229° 32′ (the latitude being 38° 59′,

the declination 88° 32′, and the refraction 1′, approximately), and at the time of the star's transit, the micrometer thread bisecting the star, there were found

$$\begin{aligned} &\text{Circle reading } C' = 229^\circ\ 32'\ 7''\ 47 \\ &\text{Microm} \quad " \quad M' = 5^r\ 50^d\ 6 \end{aligned}$$

The value of one division of the micrometer was 0″ 927. Hence

$$\begin{array}{rrrrr} & C' - C_0 = 229^\circ & 32' & 12'' & 77 \\ M' - M_0 = +\ 13^d\ 75 = & & & +\ 12 & 75 \\ \hline & (N') = 229 & 32 & 25 & 52 \end{array}$$

This is the apparent nadir distance upon the supposition that the position of the reading microscopes (which rest on the axis of the telescope*) remained absolutely fixed while the instrument revolved from the nadir to the star To determine this, the spirit level was applied to the microscope frame At the nadir reading, the inclination of the frame was $i_0 = -1''\ 23$, and at the observation of the star it was $i' = -1''\ 54$, and hence we have

$$\begin{array}{rrrrr} (N') = & 229^\circ & 32' & 25'' & 52 \\ i' - i_0 = & & & -\ 0 & 31 \\ \hline N' = & 229 & 32 & 25 & 21 \end{array}$$

In this observation, the circle was east, and the nadir distance was reckoned through the south point

197. Since C_0 and M_0 will be applied in reducing all the observations made on the same day, or so long as these quantities are regarded as constant, it will be convenient to combine them once for all We may either convert the micrometer reading into seconds of arc and add it to the circle reading, which will give the circle reading when $M_0 = 0$, or convert the seconds of the circle reading into divisions of the micrometer and add it to the micrometer reading, which will give the micrometer reading when $C_0 = 0$ Thus, if we take the latter method in the preceding example, we have $C_0 = -5''\ 30 = -5^d\ 72$ of the micrometer We then take $(M) = C_0 + M_0 = 5^r\ 36^d\ 85 - 5^d.72 =$

* As this construction involves the necessity of an additional observation, and thus introduces another source of error, it appears to be preferable to attach the reading microscopes permanently to the piers, provided the piers are well guarded against changes of temperature which might alter the relative positions of the microscopes

$5^r\ 31^d.13$, which we may call the *micrometer zero*, and in any observation of a star when the circle reading is C' and micrometer reading M', the nadir distance will be simply $(N') = C' + M' - (M)$. In this example, therefore, we should have

$$\begin{array}{rr}
C' = & 229^\circ\ 32'\ \ 7''.47 \\
M' - (M) = +\,19^d.47 = & +\,18.05 \\
\hline
(N') = & 229\ \ 32\ \ 25.52
\end{array}$$

198. Instead of a single micrometer thread, BESSEL used a double one, consisting of two very close parallel threads. The sight line is then a line which bisects the angle between the threads, and a star is always observed when it is estimated to be midway between them. It was the opinion of BESSEL that even greater accuracy was attainable in this way than in bisecting a star by a single thread. Although there may be some doubt of this being true for all observers, still the method has advantages in determining the nadir point. The sight line determined by the middle point between the threads will be vertical when each thread is in coincidence with the image of the other thread. But, as we cannot depend upon such directly observed coincidences, the micrometer reading for coincidence is found by taking the mean of two observations, at one of which the image of one of the threads is placed midway between the threads, and at the other the image of the other thread is so placed. Thus, at one observation we make the observation *a*, Fig. 47, and at the other the observation *b*, and take the mean of the corresponding readings.

Fig. 47
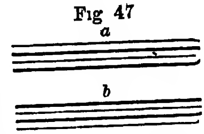
199. *Reduction to the meridian.*—In the above method of observation, the determination of the nadir point is made very precise by repeating the readings of the circle and micrometer, but the reading for the star depends upon a single observation. In order to give both measures at least equal precision, we must make several bisections of the star by the micrometer thread during the passage of the star across the field. But, since the star in general describes a small circle in the field, all the measures on either side of the meridian will require a correction. In investigating this correction, I shall suppose that the instrument is not precisely in the meridian, in order to see what effect its errors have upon the observed declination.

In Fig 48, constructed as in Art 123, let O be the position of the star The great circle described by the telescope is $N'Z'S'$, and Z' is the zenith of the instrument The arc AO drawn from the pole of the great circle $N'Z'S'$ to the star intersects this circle in O', and OO' represents the micrometer thread which bisects the star, since this thread is also perpendicular to the plane of the instrument, and $O'O = c$ is the distance of the star from the collimation axis If the telescope were directed to the pole, the thread would coincide with PP', P' being the point in which the great circle AP intersects $N'Z'S'$ Hence, P' is the apparent pole of the instrument, and the apparent polar distance of the star, as given by the instrument, is $P'O' = 90° - \delta'$ (denoting the instrumental declination by δ') But, since the triangle $P'AO'$ is right angled at P' and O', the angle $P'AO'$ is measured by $P'O'$ We have, therefore, in the triangle PAO (with the notation of Art 123), the sides $PA = 90° - n$, $AO = 90° + c$, $PO = 90° - \delta$, with the angle $APO = 90° + \tau - m$, and the angle $PAO = 90° - \delta'$ Hence, by Sph Trig,

Fig 48

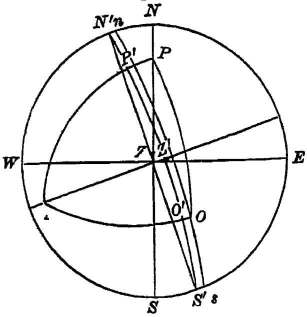

$$\left.\begin{aligned} \sin\delta &= -\sin n\sin c + \cos n\cos c\sin\delta' \\ \cos\delta\sin(\tau - m) &= \cos n\sin c + \sin n\cos c\sin\delta' \\ \cos\delta\cos(\tau - m) &= \cos c\cos\delta' \end{aligned}\right\} \quad (191)$$

in which δ is the corrected declination,* τ is the east hour angle of the star, and m and n are the instrumental constants as determined by transit observations (Art 151) But, since n is exceedingly small (seldom more than $0^s.5 = 7''.5$) and c not more than $15'$ even when the star is observed near one of the extreme transit threads, the product $\sin c \sin n$ will be insensible, and we may always put $\cos n = 1$ The first and third of these equations, therefore, become

$$\sin\delta = \cos c \sin\delta'$$
$$\cos\delta\cos(\tau - m) = \cos c\cos\delta'$$

whence

$$\tan\delta = \cos(\tau - m)\tan\delta' \quad (192)$$

* That is, δ is the apparent declination (affected by refraction and parallax) as it would be given by an observation in the meridian with a perfectly adjusted instrument.

from which it appears that the only correction for the error of the instrument with respect to the meridian is the subtraction of the constant m from the hour angle. The value of δ will be found more conveniently by developing it in series by Pl. Trig. Art. 254, we find

$$\delta \doteq \delta' + \frac{q \sin 2\delta'}{\sin 1''} + \frac{q^2 \sin 4\delta'}{2 \sin 1''} + \&c.$$

in which

$$q = -\frac{\sin^2 \frac{1}{2}(\tau - m)}{1 - \sin^2 \frac{1}{2}(\tau - m)} = -\tan^2 \tfrac{1}{2}(\tau - m)$$

As it is more convenient to employ $\sin^2 \frac{1}{2}(\tau - m)$ instead of $\tan^2 \frac{1}{2}(\tau - m)$, because tables of the former quantity are in common use (see Tables V. and VI.), we develop q in the form

$$\begin{aligned} q &= -\sin^2 \tfrac{1}{2}(\tau - m)\,[1 - \sin^2 \tfrac{1}{2}(\tau - m)]^{-1} \\ &= -\sin^2 \tfrac{1}{2}(\tau - m) - \sin^4 \tfrac{1}{2}(\tau - m) - \&c. \end{aligned}$$

and, substituting this value, we find

$$\delta = \delta' - \frac{\sin^2 \frac{1}{2}(\tau - m)}{\sin 1''} \sin 2\delta' - \frac{2 \sin^4 \frac{1}{2}(\tau - m)}{\sin 1''} \sin 2\delta' \sin^2 \delta' \qquad (193)$$

where the last term is usually insensible, and the term $\dfrac{\sin^2 \frac{1}{2}(\tau - m)}{\sin 1''}$ $\sin 2\delta'$ is called the reduction to the meridian.* In computing this term, we may use δ for δ'. The correction is always subtractive from the instrumental declination. If, however, we wish to apply it to the observed nadir distance N', we must observe the sign of N' in (190). For circle east, the reduction will be additive to N', and for circle west, subtractive from N'.

EXAMPLE.—In the observation of *Polaris* on May 4, 1856, p. 287, the star was not only observed at the time of its transit, but it was bisected by the micrometer thread a number of times during its passage over the field, the clock being noted at each bisection, as in the following table, which contains also the reduction of the observations.

---

* The last term of the series becomes a maximum for a given value of $\tau - m$ when $\delta = 60°$, in which case the value of the term is $\dfrac{\sin^4 \frac{1}{2}(\tau - m)}{\sin 1''}\,\frac{3}{4}\sqrt{3}$, which amounts to $0''.01$ only when $\tau - m = 6^m\,23^s$. For $\delta = 88°\,30'$, the term amounts to $0''.01$ only when $\tau - m = 12^m$.

T	M'	$M' - M_0 = M''$		$\alpha' - T = \tau - m$	R	$M'' + R$	Diff from mean
$1^h\ 1^m\ 51^s$	$5^r\ 50^d\ 5$	$+13^d\ 65 =$	$+12''\ 65$	$+2^m\ 52^s$	$-0''\ 41$	$+12''\ 24$	$-0''\ 20$
2 17	50 9	14 05	13 02	2 26	0 30	12 72	+0 28
2 49	50 8	13 95	12 93	1 54	0 18	12 75	+0 31
3 16	50 5	13 65	12 65	1 27	0 11	12 54	+0 10
3 35	50 2	13 35	12 38	1 8	0 06	12 32	−0 12
4 0	50 4	13 55	12 56	0 43	0 03	12 53	+0 09
4 30	50 8	13 95	12 93	+0 13	0 00	12 93	+0 49
4 57	50 4	13 55	12 56	−0 14	0 00	12 56	+0 12
6 11	49 4	12 55	11 63	1 28	0 11	11 52	−0 92
6 37	50 4	13 55	12 56	1 54	0 18	12 38	−0 06
7 0	49 8	12 95	12 00	2 17	0 26	11 74	−0 70
7 24	51 2	14 35	13 30	2 41	0 36	12 94	+0 50
7 55	50 9	14 05	13 02	−3 12	−0 51	+12 51	+0 07
					Mean	+12 44	

The column T contains the observed clock times M' the micrometer reading at each bisection of the star, $M' - M_0$ is found from the observation of the nadir, which gave $M_0 = 5^r\ 36^d\ 85$, and M'' is the value of $M' - M_0$ in arc, the value of a division being $0''\ 927$ To find $\tau - m$, we observe that the hour angle τ is found by the formula

$$\tau = \alpha - (T + \Delta T)$$

α being the right ascension of the star and ΔT the clock correction, and hence

$$\tau - m = \alpha - \Delta T - m - T$$

or, putting

$$\alpha' = \alpha - \Delta T - m$$

we have

$$\tau - m = \alpha' - T$$

In the present example, the value of m was $+ 0^s\ 42$, and ΔT was $+ 1^m\ 2^s\ 85$ The apparent place of the star, from the American Ephemeris, was

$$\alpha = 1^h\ 5^m\ 46^s\ 29 \qquad \delta = 88°\ 32'\ 26''\ 00$$

Hence, $\alpha' = 1^h\ 4^m\ 43^s.0$, the difference between which and each T is given in the column $\tau - m$

The reduction to the meridian, here denoted by R, is conveniently computed by the aid of Table VI, under the form

$$R = -\frac{2 \sin^2 \frac{1}{2}(\tau - m)}{\sin 1''} \cos \delta \sin \delta \tag{194}$$

This reduction is here to be applied to the observed nadir dis-

tance with the same sign as to the declination, for the finder was west, and the nadir distance, being reckoned through the south point over the zenith, increases with the declination The two quantities M'' and R being applied to the difference of the circle readings for the nadir point and the star, we have the apparent nadir distance of the star in the meridian The sum $M''+R$ should then be the same for each observation, and we have here found its value for each in order to determine the probable error of observation. From the "differences from the mean" in the last column, we find that the probable error of a single observation was 0″ 28, which includes the error in bisecting the star by the thread, the error arising from unsteadiness of the star, and errors of the micrometer.

The meridian nadir distance of the star from the mean of all the observations is then found as follows

$$
\begin{array}{rr}
\text{(From page 288) } C' - C_0 = & 229^\circ\ 32'\ 12''\ 77 \\
M'' + R = & +12\ \ 44 \\
\text{Corr for incl of microscopes} = i' - i_0 = & -\ 0\ \ 31 \\
\hline
N' = & 229\ \ 32\ \ 24\ \ 90
\end{array}
$$

The observation was taken to determine the latitude, and, in order to find the refraction, the barometer and thermometer were observed both before and after the observation, as follows.

	At $1^h\ 0^m$	At $1^h\ 12^m$	Means
Barometer	30^{in} 176	30^{in} 210	30^{in} 193
Attached Therm	56°	56° 5	56° 3
External "	54 9	54 .6	54 75

Hence, using BESSEL's Refraction Table, we find

$$
\begin{array}{rr}
-z' = & 49^\circ\ 32'\ 24''\ 90 \\
\text{Refraction} = & 1\ \ 8\ \ 05 \\
\hline
-z = & 49\ \ 33\ \ 32\ \ 95 \\
\delta = & 88\ \ 32\ \ 26\ \ 00 \\
\hline
\varphi = & 38\ \ 58\ \ 53\ \ 05
\end{array}
$$

200 *Horizontal point—Observation of a star by reflection.*—The second method of using the instrument is that in which the apparent altitude of a star is determined by taking half the angular distance between the star and its image reflected in a

basin of mercury. The direct observation of the star is usually made before the meridian transit, and that of the reflected image after the transit, or *vice versa*, and each is reduced to the meridian. The difference of the two reduced circle readings (*plus* the difference of the micrometer readings if the observations are made on the movable thread) is twice the meridian altitude. The half sum of these readings is the reading when the sight line is horizontal, and represents the *horizontal point* of the circle.*

In observing equatorial stars by this method, the circle is set approximately for the direct observation, and the microscopes read off before the star comes into the field. Then one or more bisections of the star are made, with the micrometer thread, before the star arrives at the middle transit thread. The telescope is then quickly turned towards the mercury and clamped at the approximate position of the reflected image, several bisections are made with the micrometer, and finally the circle is again read off. That no time may be lost in setting the circle upon the reflected image, a spirit-level finder attached to the tube of the telescope is previously set to the approximate depression of the image; the telescope is then revolved until the bubble plays.

In the case of stars near the pole, the circle may be read off a number of times during the transit, as in the following example from BESSEL.

EXAMPLE.—The following observations of *α Ursæ Minoris* were taken by BESSEL with the Repsold meridian circle of the Konigsberg Observatory in 1842, April 22. The star, or its reflected image, was brought in the middle between the two close threads of the micrometer by moving the telescope by the tangent screw, the micrometer thread being used as fixed, and the circle was read off after each observation. Five direct observations are preceded and followed by three reflection observations.

* The determination of the horizontal point by reflection observations should be used, in conjunction with the other methods given in the text, for the sake of verification. Indeed, it is desirable that *all* the instrumental constants should be found by at least two independent methods. The construction of the instrument so that this shall always be possible presents difficulties, which, however, have been successfully overcome by DR. B. A. GOULD in the large meridian circle constructed under his direction for the Dudley Observatory.

α Ursæ Minoris.—Upper Culmination

Clock	$\tau - m$	Circle	R	Meridian
$0^h\ 45^m\ 54^s$	$17^m\ 20^s$	146° 15′ 11″.0	+ 15″.8	146° 15′ 26″.8
49 1	14 13	16 .9	+ 10 .6	27 .5
51 6	12 8	20 .2	+ 7 .7	27 .9
54 9	9 5	33 44 44 .0	− 4 .3	33 44 39 .7
58 53	4 21	41 .5	− 1 .0	40 .5
1 2 54	0 20	40 .5	0 .0	40 .5
7 28	4 14	42 .8	− 0 .9	41 .9
12 6	8 52	45 .6	− 4 .1	41 .5
18 25	15 11	146 15 15 .4	+ 12 .1	146 15 27 .5
21 27	18 13	10 .4	+ 17 .4	27 .8
23 46	20 32	5 .4	+ 22 .1	27 .5

	Mean Direct	33 44 40 .82
	" Reflect	146 15 27 .50
	App merid zen dist	33 44 36 .66
Barom 29in.808 Att Therm 47°.1 F; Ext " 49 .0 "	Refraction	+ 38 .76
Correction of the circle graduation + 0″.470; Corr for distance of mercury + 0 .018		+ 0 .49
	Star's polar distance	1 31 53 .53
	Complement of latitude	35 17 9 .44
	$\varphi =$	54 42 50 .56

In computing $\tau - m$ by the form $\alpha' - T$, we have assumed $\alpha' = 1^h\ 3^m\ 14^s$. The circle readings are the means obtained from the readings of four microscopes

The reduction to the meridian R is computed for the reflection observations by the same formulæ as for direct ones, only changing its sign

The correction of the circle graduation was derived by BESSEL from a special investigation of the errors of those divisions which come into use in the observation of *Polaris* by direct and reflection observations at its upper culmination For a given zenith distance z, the four divisions that come into use in the direct observation by the use of the four microscopes are z, $90° + z$, $180° + z$, $270° + z$, and in the reflection observation, $360° - z$, $90° - z$, $180° - z$, and $270° - z$ The correction 0″.470 is here the mean of the corrections of these eight divisions for $z = 33° 44′$, the sign of the correction for the reflection observations being changed.*

* See BESSEL, in *Astron Nach*, Nos 481 and 482

The correction for the distance of the mercury from the instrument is simply the difference of the latitude of the mercury basin and the centre of the telescope For in this method we really measure the angle between the direct and reflected rays which is formed at the surface of the mercury, and, consequently, the latitude determined is that of the mercury The basin was here north of the instrument, and the deduced latitude would require a subtractive correction, or the zenith distance an additive one

To find the horizontal point of the circle corrected for the division errors, we have, according to BESSEL, for $z = 33° 44'$ in the direct observation, the correction $+ 0'' 156$, and for the supplement of this the correction $- 0'' 784$, the half difference of which is the correction $+ 0'' 470$ used above, and the half sum $- 0'' 314$ is the correction of the horizontal point found by taking the mean of the circle readings in the direct and reflected observations Thus, we have

Mean of circle readings	=	90° 0′ 4″ 16
Corr of graduations	=	− 0 31
Horizontal point	=	90 0 3 85

The *zenith point* of the circle is, therefore, 0° 0′ 3″ 85 So long as the state of the instrument is unchanged, this is the constant correction of all zenith distances observed, additive or subtractive, according as the object is south or north of the zenith

201 The nadir, horizontal, and zenith points of the circle are all determined when any one of them is determined,* and therefore we ought to be able to combine the results obtained by the mercury collimator and by reflection observations of stars Nevertheless, observers have sometimes found discrepancies between the two methods which appeared to be greater than could fairly be ascribed to errors of observation Among the sources of error which may produce such discrepancies, we may here mention the *personal equation* in bisecting a star by a micrometer thread Prof J H C COFFIN† has demonstrated the existence of such an equation, more or less constant, between different observers, by comparing the declinations of the same

* Provided the errors of division and of flexure have been duly eliminated

† *Astronomical Journal*, Vol III. p 121

star obtained by the different observers using the mural circle of the Washington Observatory during the years 1845 to 1849 inclusive, the declinations having all been reduced to the same epoch He also found a constant difference between the declinations of zenith stars observed by himself when they were observed as southern stars—*i e* with the body fronting south—and when they were observed as northern stars, and this under conditions which excluded the hypothesis of a parallax resulting from a maladjustment of focus This difference amounted to nearly $0''.5$

A really constant error in bisecting a star will affect the zenith distances of all stars alike, but will have opposite effects upon the deduced declinations of stars north and south of the zenith It will also have opposite effects upon the declination of the same star deduced from direct observations and by reflection, and hence the discordance between the results of these two kinds of observations will be twice that error It will also cause the zenith points determined from north and south stars to differ by twice the error of bisection

Professor COFFIN also suggests that the discrepancies referred to may possibly be produced, in part at least, by a habit of making the bisection constantly before or constantly after the instant for which it is recorded, in which case the error will vary with the declination Thus, if the observation is recorded as made at the time the star passes the middle thread, and the observer always makes the bisection at a *constant time* before or after the transit, the error will be simply the reduction to the meridian for this time, and, consequently, proportional to $\sin 2\delta$, but if he observes at the *constant distance* c from the middle thread, the error in the time being $c \sec \delta$, the corresponding error in the declination will be proportional to $c^2 \sec^2 \delta \sin 2\delta$, that is, proportional to $\tan \delta$

Inclination of the micrometer thread is another source of error, which should always be attended to and removed by adjustment if possible, or by computing the correction for it. It is evident that the error in the observed declination will be proportional to the distance of the point at which the observation is made from the middle thread The inclination will be determined by bisecting a star at two extreme points on the right and left of the field The difference of the two observations, when both have been reduced to the meridian, will give the required correc-

tion for inclination A star near the pole will be preferable for this purpose, as a number of bisections may be made at each extremity of the field

202 EXAMPLE —As an example involving all the various corrections, I extract the following from the Greenwich Observations

Zenith distances observed with the Transit Circle —Greenwich, April 16, 1852

Object	Pointer	Microscopes of Circle						Telescope micrometer	N
		A	B	C	D	E	F		
η Bootis (Reflected)	147° 20′	2r 173	2r 130	2r 270	1r 802	2r 085	2r 150	19r 110	1
η Bootis (Direct)	32 0	0 942	0 901	1 038	0 612	0 820	0 903	20 163	7
Nadir point	179 40	0 753	0 712	0 818	0 420	0 636	0 743	21 364	

At the observation of *η Bootis* there were also observed

Barom 29in 86, Att Therm 33° 2, Ext Therm 36° 8

The pointer, which is used in setting the circle for an observation, gives the degrees and next preceding 5′ of the circle reading

One revolution of a circle microscope is called a "nominal minute," and the mean value of 4r 902 corresponds to 5′, so that the nominal minutes are reduced to true minutes of arc by increasing them by their $\frac{1}{50}$ part Since the mean of the microscopes is to be found by dividing their sum by 6, and the decimal part of the quotient is then to be converted into nominal seconds by multiplying by 60, the nominal seconds in the mean are obtained at once by simply adding the decimals of the several microscope readings (making the integers the same in all) and removing the decimal point one place Thus, in the first observation, making 2 the common integer, the sum of the decimals is 610, and hence the mean is 2′ 6″ 10 (nominal), which increased by its $\frac{1}{50}$ or $\frac{2}{100}$ part is 2′ 8″ 62 of arc This requires a further correction for variation of the value of a microscope revolution from its mean value, that is, for error of runs (Art 22) The correction for runs on the given date was + 0″ 576 for 100 nominal seconds, and, therefore, the correction of the first observation is $+ 0''.576 \times 1\,261 = + 0''.73$.

There is next to be applied the correction for error of graduation and of flexure These are combined in a table given in the introduction to the observations, from which their values, as used in the following reduction, are taken with the argument "Pointer reading."

The value of one revolution of the telescope micrometer was 29″ 626, and the reading multiplied by this number is always additive to the circle reading

The distance of the star from the meridian is expressed by the number in the last column of the above table, here denoted by N, which is the number of the transit thread at which the bisection is made The middle thread is assumed to be in the meridian,* and, since the average distance of two adjacent threads was 207″ 31, the number of the middle thread being 4, the distance of the star from the meridian is represented by

$$c = 207'' 31 \, (N - 4)$$

The formula for reduction to the meridian is put under the approximate form

$$R = \tfrac{1}{4} \tau^2 \sin 1'' \sin 2\delta = \tfrac{1}{2} \tau^2 \sin 1'' \sin \delta \cos \delta$$

and τ is also found approximately by the formula $\tau = c \sec \delta$ hence, according to this (rather inaccurate) method, we have

$$R = \tfrac{1}{2} c^2 \sin 1'' \tan \delta$$

which for the Greenwich instrument gives

$$R = 0'' 1042 \tan \delta \times (N - 4)^2$$

as given in the explanations of the observations

The micrometer thread was inclined so that an observation at one of the side threads required the correction $- 0'' 775 \times (N - 4)$.

The complete reduction of the above observations is, therefore, as follows In computing the reduction R we have assumed $\delta = 19° 8'$

* I am here stating the method employed at the Greenwich Observatory, not recommending it For stars near the pole it is not sufficiently accurate, as will be found by reducing some of the observations of α and λ *Ursæ Minoris* by our complete formula (193) A difference of 0″ 2 or 0″ 3 occurs in some cases

	η Bootis (R)	η Bootis (D)	Nadir Pt.
Mean of microscopes	+ 2′ 6″ 10	+ 0′ 52″ 16	+ 0′ 40″ 82
Reduction to arc = $\frac{1}{50}$	+ 2 52	+ 1 04	+ 0 82
Correction for runs	+ 0 73	+ 0 30	+ 0 24
Division error	+ 1 51	+ 1 24	+ 0 86
Telescope micrometer	+ 9 26 15	+ 9 57 35	+ 10 32 93
Reduction to meridian	— 0 32	+ 0 32	
Corr for inclination of thread	+ 2 33	— 2 33	
Pointer	147° 20′	32° 0′	179° 40′
Corrected merid circle reading	147 31 39 02	32 10 50 08	179 51 15 67

Hence, by *η Bootis*, we have

App zenith dist (R)	32° 28′ 20 98
" " " (D)	32 10 50 08
Mean app zen dist	32 19 35 53
Refraction	+ 38 01
z =	32 20 13 54
φ =	51 28 38 20
δ =	19 8 24 66

The half difference of the apparent zenith distances (R) and (D) is evidently the zenith point correction, and is here + 8′ 45″ 45 additive to all circle readings According to the nadir point observation, it is + 8′ 44″ 33 The practice at the Greenwich Observatory, however, is to employ for a number of consecutive days a mean value of the zenith point correction obtained from all the values determined during the period Thus, the mean value employed from April 12 to April 24, 1852, a period including the above observations, was + 8′ 45″ 16 The practice recommended by BESSEL of employing the nadir point readings determined at the time of the observation is preferable

203. The zero points of the circle may also be determined by reversing the axis, if the microscopes rest on the axis and, consequently, are reversed with it Let a collimating telescope be placed anywhere in the meridian with its axis directed towards the rotation axis of the meridian circle, and let it be provided with a cross thread in its focus Direct the telescope upon the collimator, and bring the micrometer thread upon the intersection of the cross thread Let C be the circle reading corrected for

the inclination of the microscope frame, micrometer reading, &c. Now reverse the rotation axis, and make a similar observation upon the collimator Let C' be the corrected reading Then it is evident that $\frac{1}{2}(C - C')$ is the true zenith distance of the collimator (supposing the readings to commence at the zenith), while $\frac{1}{2}(C + C')$ is the true reading when the telescope is vertical, and represents the *zenith point* This method may occasionally be used for the purpose of comparison with the methods already given, but it is too troublesome for constant use Moreover, observations depending on the spirit level are not so reliable as those made from the surface of mercury, which, when at rest, must be *perfectly* horizontal

Another method, suggested by the ever-inventive BESSEL (before the introduction of the mercury collimator, however), is also dependent on the spirit level, but admits of greater accuracy than the above, because a level of larger dimensions may be used The level is applied to the collimating telescope, which is placed in the horizontal plane of the axis of the meridian circle When the bubble is in any given position, the sight line of the collimator makes a given angle with the vertical If, then, the collimator with its level is first placed south and then north of the circle, and the bubble of the level brought to the same reading in each case, the zenith distance of the cross thread observed by the circle must be the same, but on opposite sides of the zenith The mean of the two circle readings will therefore be the zenith point reading Instead of bringing the level of the collimator to the same reading, it will be preferable to observe the inclination in each position north and south, by reversing the level in the usual manner, then the difference of the inclinations will be applied as a correction to the mean of the circle readings to obtain the true zenith point This method has the advantage of not requiring a reversal of the axis of the meridian circle. Plate III Fig. 2 represents a collimator with its spirit level, as required in this method Two piers, one north and one south of the circle, are each provided with Vs, which receive the collimating telescope alternately

Finally, to complete the enumeration of methods depending on the spirit level, the collimating telescope may be placed vertically over or under the telescope of the meridian circle The level is then attached to the collimator at right angles to its optical axis Two observations are made upon the cross thread

of the collimator as before, the collimating telescope being (between the two observations) revolved 180° about the vertical line The mean of the circle readings, corrected for difference in the inclination of the collimator as shown by the level, will be the zenith or nadir point reading

204 *Flexure*—Notwithstanding the conical form which is given to the telescope tubes of large instruments, their weight produces a sensible flexure, which may change the position of the optical axis of the telescope with respect to the zero points of the circle It is important, therefore, to investigate the amount of this flexure The following is BESSEL's method

Two collimators, such as that represented in Plate III Fig 2, are mounted in the horizontal plane of the axis of the circle, one north and the other south The cross threads of the collimators admit of adjustment (by a micrometer screw, for example), so that they may be brought to coincide with each other, the meridian circle being raised upon the reversing apparatus during this adjustment The two intersections of the cross threads of the collimators now represent two infinitely distant points whose angular distance is exactly 180°. The meridian circle being replaced, observe this angular distance in the usual manner It is evident that the errors of division of the circle will not enter, since the same two divisions come under the opposite reading microscopes in the two observations in reverse positions. The difference of the two circle readings will, therefore, be exactly 180° if there is no flexure But if the difference is less than 180° by a quantity x, then $\frac{1}{2}x$ is the correction for flexure in the horizontal position of the telescope. In this way, AIRY found that when the Greenwich transit circle was directed upon the south collimator, the circle reading was 89° 46′ 15″ 52, and when upon the north collimator, 269° 46′ 16″ 35, the difference 180° 0′ 0″ 83 is the apparent distance of the two opposite points measured through the nadir, and hence one-half of 0″ 83, or 0″ 41, is the effect of flexure in increasing apparent nadir distances or in diminishing apparent zenith distances

In different positions of the telescope, the mechanical effect of each particle of metal, supposing it to act simply as a weight attached to a lever, will vary as the sine of the zenith distance. so that if f is the horizontal flexure, $f \sin z$ expresses the flexure in general. It is not quite certain, however, that the flexure

always follows this simple law, and to determine the law experimentally, we should have the means of mounting a pair of collimators in a line making any angle with the vertical

The flexure determined by the above method is properly called the *astronomical* flexure, as it gives the deviation of the optical axis, which becomes a direct correction of our astronomical measures It is evident, however, that it does not express the absolute flexure of the tube If when the tube is horizontal both ends drop the same distance, the optical line determined by the centre of the objective and the micrometer thread will merely be moved parallel to itself, and no flexure will appear from the circle readings, for the collimators do not determine merely a single fixed line in space, but rather a system of parallel lines, or simply a fixed direction

The effect of the flexure upon an observation is, then, zero if the absolute flexures of the two halves of the telescope are equal, and when these are unequal, the effect is proportional to their difference This leads directly to the method of eliminating flexure, first suggested by the elder REPSOLD in 1823 or '24, by interchanging the objective and ocular of the telescope Let us suppose that at any given zenith distance the centre of the objective drops the linear distance a, and the horizontal thread in the focus drops the distance a', so that a and a' represent the absolute flexures of the two halves of the tube Then, if the whole length of the tube is denoted by $2r$, the angles of depression of the two portions may be expressed by $\frac{a}{r}$ and $\frac{a'}{r}$ respectively If then γ is the angle which the sight line now makes with the direction it would have had if no flexure had taken place, we have $\gamma = \frac{a - a'}{2r}$, that is, the astronomical flexure is proportional to the absolute flexure Now let the objective and ocular be interchanged, and the telescope revolved 180°, so as to be again directed upon a point at the same zenith distance as before *The absolute flexures being the same as before*, that of the object end is now a', and that of the eye end is a so that the astronomical flexure is now $\frac{a' - a}{2r} = -\gamma$ Hence the mean of two observations of the same star made with the objective and ocular reversed will be free from the effect of flexure Moreover, the half difference of the measured zenith distances will be the astronomical flexure. It is here assumed that the abso-

lute flexures of the two halves remain the same when the objective and ocular are interchanged For a discussion by HANSEN of the conditions necessary in the construction of the telescope in order to satisfy this condition (if possible), see *Astr Nach*, Vol XVII p. 70 *

As to the effect of gravity upon the form of the circle, see BESSEL's paper, *Astr Nach*, Vol XXV.

205 *Observations of the declination of the moon with the meridian circle.*—In these observations, the micrometer thread is usually brought into contact with the full limb, and a correction is applied to the deduced declination of the limb for the moon's parallax and semidiameter When the observation is not made in the meridian, the reduction to the meridian (194) is also to be applied, together with a correction for the moon's proper motion The most precise formula for making these reductions is that given by BESSEL, which is deduced as follows

In Fig 46, p 290, let O now represent the apparent position of the moon's centre, and suppose the observed point of the moon's limb to be designated by M (not given in the figure) Conceive an arc to be drawn from A tangent to the moon's limb The point of contact M, and the points A and O, form a triangle, right angled at M, of which the side MO is the moon's apparent semidiameter $= s'$, the side $AO = 90° + c$, and the angle at A may be denoted by d We have then

$$\sin s' = \sin d \cos c$$

Let

$\delta_1 =$ the observed declination of the limb, corrected for refraction,

$\delta' =$ the apparent declination of the moon's centre,

then in the triangle AOP we have the sides $AO = 90° + c$, $PA = 90° - n$, $PO = 90° - \delta'$, and the angles $PAO = \delta_1 \mp d$, $APO = 90° + (\tau - m)$, whence, as in Art 199

$$\begin{aligned} \sin \delta' &= -\sin n \sin c + \cos n \cos c \sin (\delta_1 \mp d) \\ \cos \delta' \sin (\tau - m) &= \cos n \sin c + \sin n \cos c \sin (\delta_1 \mp d) \\ \cos \delta' \cos (\tau - m) &= \cos c \cos (\delta_1 \mp d) \end{aligned}$$

* See also Dr GOULD's remarks on the meridian circle of the Dudley Observatory, Proceedings of the Am Association for the Adv of Science, 10th meeting, p 116

But, as before, we shall neglect the insensible term $\sin n \sin c$, and put $\cos n = 1$, and then the first and third of these equations will suffice to determine δ' Moreover, since in the case of the moon τ will not exceed 1^m, the neglect of m will cause no sensible error in $\cos(\tau - m)$ Hence we take

$$\sin \delta' = \cos c \sin (\delta_1 \mp d)$$
$$\cos \delta' \cos \tau = \cos c \cos (\delta_1 \mp d)$$

or, developing the second members,

$$\sin \delta' = \cos c \cos d \sin \delta_1 \mp \sin s' \cos \delta_1$$
$$\cos \delta' \cos \tau = \cos c \cos d \cos \delta_1 \pm \sin s' \sin \delta_1$$

whence, by eliminating $\cos c \cos d$, we find

$$\mp \sin s' = \sin \delta' \cos \delta_1 - \cos \delta' \sin \delta_1 \cos \tau \tag{195}$$

If now we put

$\delta =$ the moon's geocentric declination,
$s =$ " " semidiameter,
$\pi =$ " eq hor parallax,
$\varphi' =$ the geocentric or reduced latitude of the place of observation,
$\rho =$ the earth's radius for the latitude φ,
$\varDelta$, $\varDelta' =$ the moon's distance from the centre of the earth and from the place of observation, respectively, the equatorial radius of the earth being unity,

we have, by the formulæ of Art 98, Vol I,

$$\varDelta' \sin \delta' = \varDelta \sin \delta - \rho \sin \varphi'$$
$$\varDelta' \cos \delta' = \varDelta \cos \delta - \rho \cos \varphi' \cos \tau$$

this last being equivalent to the more rigorous one in (133) of Vol I, when the moon is near the meridian, and by Art 128, Vol I, we also have

$$\varDelta' \sin s' = \varDelta \sin s$$

Substituting these expressions in (195), after multiplying it by $\varDelta'$, we find

$$\mp \varDelta \sin s = \varDelta \sin (\delta - \delta_1) + 2 \varDelta \cos \delta \sin \delta_1 \sin^2 \tfrac{1}{2} \tau$$
$$- \rho \sin (\varphi' - \delta_1) - \rho \cos \varphi' \sin \delta_1 \sin^2 \tau$$

Dividing by $\Delta = \frac{1}{\sin \pi}$, this becomes

$$\mp \sin s = \sin (\delta - \delta_1) + 2 \cos \delta \sin \delta_1 \sin^2 \tfrac{1}{2} \tau$$
$$- \rho \sin \pi \sin (\varphi' - \delta_1) - \rho \sin \pi \cos \varphi' \sin \delta_1 \sin^2 \tau$$

where the last term is evidently insensible If then we put

$$\sin p = \rho \sin \pi \sin (\varphi' - \delta_1) \tag{196}$$

we have

$$\sin (\delta - \delta_1) = \sin p \mp \sin s - 2 \cos \delta \sin \delta_1 \sin^2 \tfrac{1}{2} \tau$$

The last term (which is the reduction to the meridian) will seldom exceed 1″, and may be put under the form

$$\sin R = \left(\frac{15}{2}\right)^2 \sin^2 1'' \quad \sin 2\delta \quad \tau^2$$

The quantity τ is here the true hour angle of the moon, to find which, let

μ_1 = the sidereal time of the observation,
μ = " " moon's transit,
λ = the increase of the moon's right ascension in one sidereal second,

then

$$\tau = (1 - \lambda)(\mu - \mu_1)$$

and hence

$$R = \frac{225}{4} \sin 1'' \sin 2\delta (1 - \lambda)^2 (\mu - \mu_1)^2 \tag{197}$$

The first two terms of the value of $\sin (\delta - \delta_1)$ differ but little from $\sin (p \mp s)$ To find their exact value, we have

$$\sin p \mp \sin s = \sin (p \mp s) + \sin p (1 - \cos s) \mp \sin s (1 - \cos p)$$
$$= \sin (p \mp s) + 2 \sin p \sin^2 \tfrac{1}{2} s \mp 2 \sin s \sin^2 \tfrac{1}{2} p$$

The last two terms of this will seldom amount to a tenth of a second, and therefore the formula may be regarded as perfectly accurate under the form

$$\sin p \mp \sin s = \sin (p \mp s) \mp \tfrac{1}{2} (p \mp s) \sin 1'' \sin p \sin s$$

Now, since $\delta - \delta_1$ and $p \mp s$ differ by so small a quantity, the ratio of the sine to the arc will be the same for both of them · hence we shall have, with the utmost precision,

$$\delta = \delta_1 + p \mp s \mp \tfrac{1}{2} (p \mp s) \sin p \sin s - R \tag{198}$$

as given by BESSEL * The upper or lower sign is to be used according as the north or the south limb is observed.

The declination thus found is reduced to the time μ_1 of the observation But if we wish its value at the time of the meridian passage, we must add to it the correction $(\mu - \mu_1)\lambda'$, in which λ' is the increase of the declination in one sidereal second, or

$$\lambda' = \frac{\Delta\delta}{60\ 1643}$$

where $\Delta\delta =$ the increase of declination in one minute of mean time, as now given in the American Ephemeris The value of $1 - \lambda$ is found as in Art 154 namely, taking $\Delta\alpha =$ the increase of the moon's right ascension in one minute of mean time, we have

$$\lambda = \frac{\Delta\alpha}{60\ 1643}$$

so that, putting

$$1 - \lambda = \frac{1}{B}$$

we shall have

$$\log(1 - \lambda) = \text{ar co} \log B$$

and log B may be taken from the table on page 179.

In practice, it will generally be most convenient to apply the several reductions directly to the observed zenith distance, as in the following example

EXAMPLE.—The declination of the moon was observed with the meridian circle of the Washington Observatory, 1850, September 17 The nadir point was first observed as follows·

	Circle Microscopes					
	A	B	C	D	Means	Micrometer thread in coincidence with its image mean of 10 readings = 38^r 934
Nadir point at 20^h 5	0″ 9	1″ 9	2″ 2	1″ 4	1″ 60	
	0 7	1 4	2 0	1 6	1 42	
Means	0 80	1 65	2 10	1 50	1 51	

The value of one revolution of the micrometer = 34″ 356, or

* *Tabulæ Regiomontanæ*, Introd p LV

$1'' = 0^r\,0291$, and hence, by the method of Art 197, the micrometer zero (or reading of the micrometer when the circle reading was $0°\ 0'\ 0''$) was

$$(M) = 38^r\,934 + 0^r\,0291 \times 1\,51 = 38^r\,978$$

The observation of the moon was as follows, S L denoting south limb

	Circle Microscopes					Clock $= \mu_1$	Micrometer $= M$
	A	B	C	D	Mean		
Moon, S L	$55°\ 52'\ 45''\ 7$	$42''\ 8$	$45''\ 2$	$46''\ 1$	$44''\ 95$	$21^h\,17^m\,21^s$	$39^r\,956$
	Barom 30^{in} 114 Att Therm 64° Ext Therm 52° 8					32	39 904
						43	39 875

The circle was *west*, in which position the readings are zenith distances towards the south The correction for runs was $-0''\,75$ for $3'$, and since the excess of the reading over a multiple of $3'$ is $1'\ 44''\ 95$, the proportional correction for runs is $-0''\,43$.

The clock time of transit of the moon's centre over the meridian was $\mu = 21^h\ 17^m\ 16^s\ 80$

The latitude of the observatory is $\varphi = 38°\ 53'\ 39''\ 25$, and therefore $\varphi - \varphi' = 11'\ 14''\ 54$, $\log \rho = 9\ 9994302$ The longitude is $5^h\ 8^m\ 12^s$ west of Greenwich

For the date of the observation, we take from the Nautical Almanac

$$\delta = -\ 16°\ 1'\ 7$$
$$\Delta\delta = +\ 6''\ 377 \quad \text{in } 1^m \text{ mean time,} \qquad \pi = 54'\ \ 9''\ 64$$
$$\Delta\alpha = \quad 2^s\,0150 \quad \text{“ “ “ “} \qquad s = 14'\ 45''\ 49$$

whence $\log(1 - \lambda) = 9\ 98521$ and $\lambda' = +\ 0''\ 1060$

The correction for the micrometer, or $M - (M)$, converted into seconds, is additive to the circle reading The reduction to the meridian, or R, found by (197), is also algebraically additive to the circle reading, attention being paid to the sign of δ, and the correction for change of declination to be added to the circle reading will be $-(\mu - \mu_1)\,\lambda'$ Since the sum of these three corrections should be the same for each micrometer observation, the precision of the observations will be shown by computing this sum for each Thus, we find

$\mu - \mu_1$	$M - (M)$	R	$-(\mu - \mu_1)\lambda'$	Sums
$-$ 4·2	33″ 60	$-$ 0″ 00	$+$ 0″ 44	34″ 04
$-$ 15 2	31 82	$-$ 03	$+$ 1 61	33 40
$-$ 26 2	30 82	$-$ 09	$+$ 2 78	33 51
			Mean $=$	33 65

Hence we have

	Circle reading $=$	55° 52′ 44″ 95
	Corr for runs $=$	$-$ 0 43
	Mean corr for microm., &c $=$	$+$ 33 65
	Apparent zenith distance $=$	55 53 18 17
	By Table II Refraction $=$	$+$ 1 25 60
$\varphi' - \delta_1 = \varphi - \delta_1 - (\varphi - \varphi')$	$\varphi - \delta_1 =$	55 54 43 77
$= 55° \, 43' \, 29''$	$-(p + s) =$	$-$ 59 27 24
By (196), $p = 44' \, 41'' \, 75$	$-\frac{1}{2}(p+s) \sin p \sin s =$	$-$ 0 10
	$\varphi - \delta =$	54 55 16 43
	$\varphi =$	38 53 39 25
	$\delta =$	$-$16 1 37 18

206 *Observations of the declination of a planet, or the sun* —The larger planets are observed in the same manner as the moon, that is, by making the micrometer thread tangent to the limb, and when the planet is treated as a spherical body the observation is also reduced in the same manner

In the case of the sun, both limbs may be observed The reduction to the meridian may be facilitated by a table giving the logarithm of the factor

$$b = \frac{225}{4} \sin 1'' (1 - \lambda)^2 \sin 2\delta$$

for each day of the fictitious year (Vol I Art 406), such as Bessel's Table XII of the *Tabulæ Regiomontanæ* This table also gives for each day of the year the value of

$$a = \text{increase of the sun's declination in 100 sidereal seconds,}$$

so that the reduction of the observed declination to the meridian, including the correction for the change of declination in the interval τ, is

$$\frac{a\tau}{100} + b\tau\tau$$

The correction for parallax may be put under the form

$$p = \frac{8''\,57116}{r}\,\rho \sin(\varphi' - \delta)$$

in which r = sun's distance from the earth, the mean distance being unity, and in each observatory this quantity may be computed for the latitude, and for each day of the year, and also inserted in the table In order to embrace every thing necessary for the complete reduction of the observed declination, the table contains also the sun's semidiameter for each day of the fictitious year.

207 *Correction of the observed declination of a planet's or the moon's limb for spheroidal figure and defective illumination*—Let us consider the most general case of a spheroidal planet partially illuminated The correction to reduce the observed declination of the limb to that of the centre is equal to the perpendicular distance from the centre to the micrometer thread, which is tangent to the limb and perpendicular to the meridian The formulæ for computing this perpendicular in general are (Vol I p 580)

$$\tan\vartheta' = \frac{\tan\vartheta}{c} \qquad\qquad \sin\chi = \sin\vartheta' \sin V$$

$$s'' = \frac{s \sin\vartheta \cos\chi}{\sin\vartheta'}$$

in which s'' is the required perpendicular, ϑ the angle which it makes with the axis of the planet (reckoning from the north point of the disc towards the east), c is a constant depending upon the eccentricity of the planet's meridian, V the angular distance of the earth and sun as seen from the planet, and s is the equatorial radius of the disc, or greatest apparent semidiameter at the time of the observation The perpendicular here coincides with the declination circle, and consequently we have at once $\vartheta = -p$, or $180° - p$, according as the north or the south limb is observed, p denoting, as in the article referred to, the position angle of the axis of the planet From the discussion in Vol I Art 354, it follows that (putting $-p$ for ϑ) the north limb will be full (and, consequently, the south limb gibbous) when $\sin p$ and $\sin V$ have the same sign We shall, therefore, here change the sign of $\sin\chi$, and take

$$\left.\begin{array}{ll} \tan p' = \dfrac{\tan p}{c} & \sin \chi = \sin p' \sin V \\ s'' = \dfrac{s_0}{r'} \dfrac{\sin p}{\sin p'} \cos \chi & \end{array}\right\} \quad (199)$$

in which s_0 = the greatest apparent semidiameter at the mean distance of the sun from the earth, and r' = the planet's geocentric distance We then have the rule *the north or the south limb is the full limb according as* $\sin \chi$ *is positive or negative* The formulæ for computing p, V, and c are given in Vol I Arts 348 et seq, and s_0 is given on p 578

The gibbosity of Saturn, however, is wholly insensible, and even that of Jupiter at the north and south points of the limb cannot exceed 0″ 05, which is so much less than the usual errors of declination observations that it may be disregarded Hence, for Saturn and Jupiter the correction will depend only upon the figure of the planet, and will be computed by the equations

$$\tan p' = \frac{\tan p}{c} \qquad s'' = \frac{s_0}{r'} \frac{\sin p}{\sin p'} = \frac{cs_0}{r'} \frac{\cos p}{\cos p'}$$

in which for Jupiter we take $\log c = 9\ 9672$, and for Saturn $c = \sqrt{(1 - ee \cos^2 l)} = \sqrt{(1 - [9\ 2706] \cos^2 l)}$, l and p being taken directly from the tables for Saturn's Ring given in the Ephemeris

A further simplification may be permitted in the case of Saturn, for, on account of the small values of p, the ratio $\dfrac{\cos p}{\cos p'}$ will be very nearly unity, and if we take $s'' = \dfrac{cs_0}{r'}$ we shall have the true value of s'' within less than 0″ 05

It is hardly necessary to remark that when we neglect the gibbosity of Jupiter or Saturn, the mean of the observed declinations of the north and south limbs gives at once the declination of the centre

For Mars, Venus, and Mercury the correction will be only for defective illumination, but in this case we can avoid the separate computation of p and V, as follows Substituting in the equation for $\sin \chi$ (199) the values of $\sin p$ and $\sin V$ given in Vol I p 577, and moreover observing that, since these bodies are regarded as spherical, we have $c = 1$, and, consequently, $p' = p$, there results

$$\sin \chi = \frac{R}{R'} [\cos \delta' \sin D - \sin \delta' \cos D \cos (\alpha' - A)] \quad (200)$$

in which

α', δ' = the planet's right ascension and declination,
A, D = the sun's " " "
R, R' = the earth's and the planet's distances from the sun,

and a positive value of $\sin\chi$ will here also indicate that the north limb is full and the south limb gibbous, and a negative value the reverse. Adapting this formula for logarithms, we have, therefore,

$$\left.\begin{aligned} \tan F &= \tan D \sec(\alpha' - A) \\ \sin\chi &= \frac{R}{R'}\,\frac{\sin(F-\delta')\sin D}{\sin F} \end{aligned}\right\} \quad (201)$$

or, more conveniently, perhaps,

$$\left.\begin{aligned} \tan E &= \tan\delta' \cos(\alpha' - A) \\ \sin\chi &= \frac{R}{R'}\,\frac{\sin(D-E)\cos\delta'}{\cos E} \end{aligned}\right\} \quad (201^*)$$

E being taken less than 90°, with the sign of its tangent Then we find the reduction to the centre of the planet by the formula

$$s'' = \frac{s_0}{r'}\cos\chi \quad (202)$$

If the declination of a *cusp* of Venus or Mercury has been observed, we must find p by the formula (Vol I p 577)

$$\tan p = \cot(\alpha' - A)\sin(F-\delta')\sec F \quad (203)$$

in which F has the same value as above, and then the reduction to the centre of the planet will be

$$s'' = \frac{s_0}{r'}\cos p$$

For the moon, when the gibbous limb has been observed, the formulæ (201) may be used for computing χ, but on account of the small difference of R and R', we may put their quotient $=1$ Since the declination of the gibbous limb will not be observed except when the moon is nearly full, it will be best to reduce the observations as if the observed limb were full, according to Art 205, and then to apply a small correction for gibbosity

This correction will be $\Delta s = s - s\cos\chi = s$ versin χ Hence the formulæ for the moon will be

$$\left.\begin{aligned} \tan E &= \tan\delta'\cos(\alpha' - A) \\ \sin\chi &= \frac{\sin(D - E)\cos\delta'}{\cos E} \\ \Delta s &= s \operatorname{versin}\chi \end{aligned}\right\} \quad (204)$$

EXAMPLE 1 —The apparent declination of the southern cusp of Venus, at its transit over the meridian of Greenwich, July 16, 1852, observed with the transit circle, was

$$\delta' = 15^\circ\ 0'\ 45''\ 60$$

From the Nautical Almanac, we have

$$\begin{array}{llll} \alpha' = 8^h\ 11^m\ 1^s\ 46 & & \log r' = 9\ 4675 \\ A = 7\ \ 43\ \ 42\ \ 80 & & D = 21^\circ\ 19'\ 8'' \end{array}$$

and from Vol I p 578,

$$s_0 = 8''\ 55$$

Hence, by (203), we find log tan p = 0 0031, and, consequently

$$s'' = \frac{s_0}{r'}\cos p = 20''\ 53$$

and the apparent declination of the planet's centre was, therefore,

$$\delta = 15^\circ\ 1'\ 6''\ 13$$

EXAMPLE 2 —The apparent declinations of Jupiter's north and south limbs, observed at Greenwich, March 18, 1852, were—

$$\begin{array}{ll} \text{N L} & \delta' = -17^\circ\ 21'\ 57''\ 36 \\ \text{S L} & \delta' = -17\ \ 22\ \ 37\ \ 61 \end{array}$$

To illustrate the complete formulæ, let us take the gibbosity of the planet into account For this purpose, we take from the Nautical Almanac

$$\begin{array}{lll} \alpha' = \ \ 230^\circ\ 56'\ 4 & A = 224^\circ\ 25'\ 0 & \\ \delta' = -\ 17\ \ 22\ \ 2 & \epsilon = \ \ 23\ \ 27\ \ 5 & \log r' = 0\ 6783 \end{array}$$

and from Vol I p 574,

$$n = 357^\circ\ 56'\ 5 \qquad \imath = 25^\circ\ 25'\ 8$$

Hence, by the formulæ (619), Vol I,

$$F = 201^\circ\ 23'\ 5 \qquad \lambda = 234^\circ\ 52'\ 3$$
$$V = A - \lambda = -10^\circ\ 27'\ 7$$
$$F' = -20^\circ\ 47'\ 5 \qquad \log \tan p = 9\ 4281$$

Then, by (199), taking $\log c = 9\ 9672$, we have

$$\log \sin \chi = n8\ 7025$$

from which it follows that the south limb was full Hence, taking $s_0 = 99''\ 70$, we find

$$\text{For full limb} \quad (s'') = \frac{s_0}{r'}\ \frac{\sin p}{\sin p'} = 19''\ 50$$
$$\text{For gibbous limb} \quad s'' = (s'') \cos \chi = 19\ \ 47$$

The declination of the centre was, therefore, according to these observations,

$$\text{From N L} \quad \delta = -17^\circ\ 22'\ 16''\ 83$$
$$\text{" S L} \quad \text{" " } 18\ \ 11$$

Considering the difference of these results, which is by no means as great as often occurs in the Greenwich observations of Jupiter, it appears that the practice there followed of always applying the *polar* semidiameter (which is the one given in the Nautical Almanac) is quite accurate enough *for these observations* Our more exact method will not be without application, however, in cases where greater refinement both in observation and reduction are attained.

Example 3 —At Greenwich, Feb 6, 1852, the declination of the moon's centre deduced from an observation of the north limb, on the assumption that this limb was full, was

$$\delta' = +13^\circ\ 17'\ 0''\ 58$$

For the time of the moon's transit on this date, we have

$$\alpha' = 158^\circ\ 18'\ 6 \qquad A = 319^\circ\ 56'\ 1$$
$$s = 16'\ 31'' \qquad D = -15\ \ 36\ \ 3$$

whence, by (204),

$$l = -2^\circ\ 58'$$

which shows that the north limb was gibbous. The correction was

$$\Delta s = s \text{ versin } \chi = 1'' 33$$

and the true declination was, therefore,

$$\delta = + 13° 17' 1'' 91$$

CHAPTER VII

THE ALTITUDE AND AZIMUTH INSTRUMENT

208 THIS instrument may be regarded as a transit instrument combined with both a vertical and a horizontal circle, by means of which both the altitude and the azimuth of a star may be observed at the instant of its transit through the vertical plane described by the telescope This combination is not often used for the higher purposes of astronomical research, as every additional movement introduced into an instrument diminishes its stability and increases the risk of error However, at Greenwich, a regular series of extra-meridian observations of the moon is carried on with such an instrument, for the sake of comparison with meridian observations The instrument has there received the name of the *altazimuth* In other places, it has been called the *astronomical theodolite*, and, in fact, the general theory of the instrument, which will be given hereafter, will be found to be directly applicable to the common theodolite employed in geodetic measurement

Still another name is the *universal instrument*, so called on account of its numerous applications, but this name is usually given only to the portable instruments of this class The small universal instruments of ERTEL are well known

209 Sometimes the horizontal circle is reduced to small dimensions, and designed simply as a finder, or to set the instru-

ment approximately at a given azimuth, while the vertical circle is made of unusually large dimensions, and is intended for the most refined astronomical measurement The instrument is then known simply as a *vertical circle* Such is the ERTEL Vertical Circle of the Pulkowa Observatory, the telescope of which has a focal length of 77 inches, and its vertical circle a diameter of 43 inches *

This instrument is permanently mounted upon a solid granite pier *G*, Plates X and XI, which is insulated from the walls and floor of the building It stands upon a tripod which is adjusted by foot screws The three feet are so placed that two of them are in the east and west line hence, but one of these two is seen in Plate X, which is a projection of the instrument upon the plane of the meridian, while all three are seen in Plate XI, which is a projection upon the plane of the prime vertical The meridional foot screw ω carries a small circle γ graduated into 360°, the index of which is attached to the foot One revolution of this circle changes the inclination of the instrument in the plane of the meridian 318″ consequently, one division corresponds to 0″ 88

The centre of the instrument is held in place by the support *a* attached to the pier

The vertical stand consists of a hollow cone of brass, in which turns the steel axis *b* The lower extremity of this axis is convex and smoothly finished, and is supported by a system of three counterpoises *c*, suspended upon levers which relieve the pressure upon the bearing points of the vertical axis, and thus diminish the friction At the top of the conical stand is a 13 inch azimuth circle, the verniers of which are attached to the axis This is provided with a clamp and tangent screw which is moved by the rod *d* in giving the upper portion of the instrument a small motion in azimuth

The upper extremity of the vertical steel axis carries the strong oblong bar *e*, which may be called the bed of the instrument On this bed rests the adjustable frame *ifgv*, which supports the horizontal axis *i* in the Vs at *vv* This axis should be perpendicular to the vertical axis, and its adjustment in this respect is effected by means of two opposing screws at *h*

The axis *i* has two equal cylindrical pivots of steel at *vv* It is hollow, to admit light from the lamp *x*, which is reflected upon

* See *Description de l'observ cent*, &c, p 130

the threads of the reticule of the telescope by a mirror in the interior of the tube at u The telescope and principal vertical circle o are firmly and invariably attached to one extremity of this axis At the opposite end of the axis is a smaller vertical circle m, which serves as a finder From the centre of this finding circle radiate four conical arms terminating in ivory balls n The telescope is swept in the vertical plane solely by means of these balls, never by touching the telescope or principal vertical circle When the telescope is approximately pointed and clamped, fine vertical motion is given to the tangent screw by the rod k The instrument is swept in azimuth by means of an ivory ball at l, the fine azimuthal motion being given by the rod d

The circle is read off by four microscopes attached to a square frame α, which is fixed to the frame $vfqv$ The level β attached to this frame indicates its inclination with respect to the horizon The circle is divided to 2′, and the microscopes read directly to single seconds, and by estimation to 0″ 1, or even less The probable error of reading of a single microscope is given by PETERS as only 0″ 090 in observations by day, and 0″ 098 in observations by night

The friction of the horizontal axis in the Vs is diminished by the single counterpoise p, which, by means of a lever, the fulcrum of which is at q, supports the principal part of the weight of the telescope, vertical circles, and horizontal axis, by exerting an upward pressure at r The point r being at suitable distances from the two Vs respectively (nearer to the principal circle than to the finder), the friction in both Vs is equally relieved, while the whole weight of the movable portion of the instrument is transferred to a point q, very near to the vertical axis of rotation

The striding level s rests upon the pivots of the horizontal axis, and, by reversal in the usual manner, serves to measure the inclination of this axis to the horizon

The reticule at t is composed of three horizontal threads, two of which are close parallel threads (the clear space between them being only 6″), which serve for the observation of objects which present sensible discs, or of those which are too faint to be observed by bisection (see Art 198) The third thread is 18″ from the others, and is used in observing stars by bisection The unequal distances prevent mistakes in the choice of threads These horizontal threads are crossed by two vertical ones, the

distance of which is 1′ of arc The middle point between these determines the optical centre of the instrument, and all observations are made as nearly as possible at this point

The extreme accuracy attainable in the observation of zenith distances with this instrument may be inferred from the following values of the *zenith point Z* (see Art 219) of the circle, as cited by STRUVE, from observations by PETERS upon *Polaris* at its upper and lower culminations:

1843	Upper transit Z	Diff from mean
April 13	0° 0′ 33″ 13	— 0″ 32
14	33 26	— 0 19
17	33 82	+ 0 37
19	33 27	— 0 18
20	33 75	+ 0 30
22	33 17	— 0 28
24	33 45	0 00
25	33 68	+ 0 23
26	33 29	— 0 16
27	33 68	+ 0 23
Mean	0 0 33 45	

	Lower transit Z	Diff from mean
April 14	0° 0′ 33″ 64	— 0″ 08
16	33 32	— 0 40
20	33 45	— 0 27
21	33 94	+ 0 22
22	33 48	— 0 24
24	33 50	— 0 22
25	33 94	+ 0 22
26	33 98	+ 0 26
27	33 82	+ 0 10
28	34 12	+ 0 40
Mean	0 0 33 72	

Hence, assuming that the zenith point of the circle was constant, the probable error of an observed value of Z was, for either series, $= 0'' 22$ This error, however, is the combined effect of error of observation and variability of Z But the probable error of observation was obtained from the discrepancies between the several values of the latitude deduced from these same observations, and was $= 0'' 17$ so that the probable error of Z arising from variation in the instrument was $= \sqrt{[(0'' 22)^2 - (0'' 17)^2]} = 0'' 14$ The means for the two transits differ by 0″.27, which results from the use of different divisions of the circle and different parts of the micrometers To compare them justly, it would be necessary first to eliminate especially the division errors

In order to eliminate the effects of flexure, the objective and ocular are made interchangeable (see Art 204)

The dimensions of the various parts of the instrument may be

taken from the plates, which are accurately drawn upon a scale of $\frac{1}{20}$ *

210 The portable universal instruments are usually so arranged that the vertical circle may be removed altogether from the instrument when horizontal angles only are to be measured One of these instruments is represented in Plate XII In Fig 1, the instrument is arranged for measuring horizontal angles exclusively In Fig 2, the telescope of Fig 1 is replaced by another which is connected with a vertical circle and (unlike the azimuth telescope) is at the end of the horizontal axis The weight of the telescope and vertical circle is counterpoised by a weight at the opposite end of the axis The focal length of the telescope in instruments of this kind seldom exceeds 24 inches

The following discussion of the theory of these instruments will apply to any of the forms above mentioned, as I shall consider their two applications—to azimuths and to altitudes—independently of each other

211 *Azimuths* —Let A_0H, Fig 49, represent the true horizon, Z the zenith Let us suppose the vertical axis of the instrument to be inclined to the true vertical line, so that when produced it meets the celestial sphere in Z' Let A_0H' be the great circle of which Z' is the pole The plane of this circle is that of the graduated horizontal circle of the instrument Let us suppose, further, that the horizontal rotation axis, which should be at right angles to the vertical axis, and, consequently, parallel to the horizontal circle, makes a small angle with this circle As the instrument revolves about its vertical axis, this rotation axis will describe a conical surface, and the prolongation of this axis to the celestial sphere will describe a small circle AA' parallel to A_0H' Let A be the point in which this axis produced through the circle end meets the sphere at the time of an observation, and O the position of a star observed on any given vertical thread

Fig 49

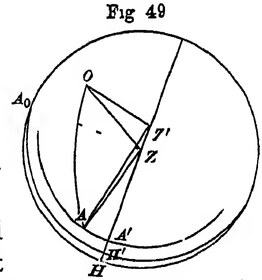

* For all the particulars of the use of this instrument in the determination of the declination of a circumpolar star, consult the memoir of Dr C A F PETERS, *Astron Nach*, Vol XXII, *Resultate aus Beobachtungen des Polarsterns am Ertelschen Verticalkreise der Pulkowaer Sternwarte*

in the field. As the telescope revolves upon the horizontal axis, its axis of collimation describes a great circle of which A is the pole, and the given thread describes a small circle parallel to this great circle. Let

c = the distance of the thread from the collimation axis, positive when the thread is on the same side of the collimation axis as the vertical circle,
b = the elevation of A above the horizon as given by the spirit level applied to the horizontal axis, positive when the circle end of this axis is too high,
i = the inclination of the vertical axis to the true vertical line,
i' = the inclination of the horizontal axis to the azimuth circle,
$a = AZH$,
$a' = AZ'H$,
A = the azimuth of the star O, reckoned from A_0 as the origin,
z = the zenith distance of the star,

then, in the triangle AZZ', we have $AZ = 90° - b$, $ZZ' = i$, $AZ' = 90° - i'$, $AZZ' = 180° - a$, $AZ'Z = a'$, and hence, by Sph. Trig.,

$$
\begin{aligned}
\sin b &= \cos a' \cos i' \sin i + \sin i' \cos i \\
\cos b \cos a &= \cos a' \cos i' \cos i - \sin i' \sin i \\
\cos b \sin a &= \sin a' \cos i'
\end{aligned}
$$

But, i, i', and b being always so small that we can neglect their squares, these equations may be reduced to the following

$$
\left.
\begin{aligned}
a &= a' \\
b &= i \cos a' + i' = i \cos a + i'
\end{aligned}
\right\} \quad (205)
$$

In the triangle AZO, we have the angle $AZO = A_0ZO + A_0ZA = A + 90° - a$, and the sides $AO = 90° + c$, $AZ = 90° - b$, $ZO = z$, and hence

$$- \sin c = \sin b \cos z - \cos b \sin z \sin (A - a)$$

or, since c and b are small,

$$\sin (A - a) = \frac{b}{\tan z} + \frac{c}{\sin z}$$

Hence $\sin (A - a)$ is also a small quantity, and the angle $A - a$

is either nearly 0° or nearly 180° When the vertical circle at the extremity of the horizontal axis is to the left of the observer, as supposed in the above diagram, it is evident that A and a are nearly equal, and $A - a$ is nearly 0° But if the instrument be revolved about its vertical axis, the azimuth circle remaining fixed, and the telescope be again directed to the same point O, the vertical circle will be on the right of the observer, and the angle a will be increased by 180° In this case, therefore, $180° - (A - a)$ will be a small quantity Putting, then, $A - a$ or $180° - (A - a)$ for $\sin (A - a)$, we have

$$A = a + b \cot z + c \operatorname{cosec} z \qquad [\text{Circle L}]$$
$$A = a + 180° - b \cot z - c \operatorname{cosec} z \qquad [\text{Circle R}]$$

Now, a is not read directly from the azimuth circle, but if we put $A' =$ the actual reading and $A_0 =$ the reading when the point A in the diagram is at A' (in which case the telescope, when horizontal, is directed towards the point A_0), we have

$$a = a' = A' - A_0 \quad [\text{Circle L}]$$
$$a + 180° = A' - A_0 \quad [\text{Circle R}]$$

and, therefore,

$$A = A' - A_0 \pm b \cot z \pm c \operatorname{cosec} z$$

We have supposed the azimuths to be reckoned from the point A_0, but it is indifferent what point of the circle is taken as the origin when the instrument is used only to determine *differences* of azimuth, since the constant A_0 of the above equation will disappear in taking the difference of two values of A For *absolute* azimuths, let us denote the azimuth of the point A_0 from the south point of the horizon by A_1, then the azimuth of the star, also reckoned from the south point, will be equal to the above value increased by A_1 If, therefore, we add A_1 to the second member, and then write ΔA for the constant $A_1 - A_0$, we shall have

$$A = A' + \Delta A \pm b \cot z \pm c \operatorname{cosec} z \quad \begin{bmatrix} + \text{ Circle L} \\ - \text{ Circle R} \end{bmatrix} \tag{206}$$

where A now denotes the absolute azimuth of the star, and ΔA is the index correction of the circle, or reduction of the readings to absolute azimuths The readings for circle right differing by 180° from those for circle left, we shall always assume that the former have been increased or diminished by 180°, when two

observations in different positions of the instrument are compared. We must now determine the quantities c, b, and ΔA.

212. *To find c and b.*—The most convenient method of finding c with a fixed instrument is to employ a collimating telescope placed on a level with the horizontal axis, such as that of Pl. III. Fig. 2. The cross thread of the collimator is observed as an infinitely distant point or star, whose zenith distance is 90°; hence $\cot z = 0$, $\operatorname{cosec} z = 1$. Observing it both with circle left and circle right, let A' and A'' be the readings of the azimuth circle (the latter reading being changed 180°); then we have

$$A = A' + \Delta A + c$$
$$A = A'' + \Delta A - c$$

whence

$$c = \tfrac{1}{2}(A'' - A')$$

which will give c with its proper sign for *circle left*.

If, however, the collimator is below the level of the horizontal axis, so that the telescope must be depressed to observe it, we shall have

$$A = A' + \Delta A + b \cot z + c \operatorname{cosec} z$$
$$A = A'' + \Delta A - b \cot z - c \operatorname{cosec} z$$

in which z = the zenith distance of the collimator = 90° + the depression of the telescope, as given by the vertical circle; then

$$c = \tfrac{1}{2}(A'' - A') \sin z - b \cos z$$

and b must be observed with the striding level applied to the axis, as in the case of the transit instrument.

When the telescope is furnished with a micrometer, the value of c can be found with still greater accuracy, by means of collimators, as in Art. 145.

213. In some cases the spirit level cannot be reversed on the axis, but is permanently attached to it or to the frame which supports it. It is then reversed only when the instrument is reversed, and it becomes necessary to know the level zero, or that reading of the level which corresponds to a truly horizontal position of the axis. Let this reading be denoted by l_0, and let l be the reading at any observation; then we have

$$b = l - l_0$$

where l is the mean of the readings of the two ends of the bubble, the readings towards the circle end being always reckoned as positive Then to find l_0 we have recourse to the observation of two stars, one near the zenith and the other near the horizon, or of the same star at different times Let A' and A'' be the circle readings, z' and z'' the zenith distances of the high star for circle left and circle right, respectively, l', l'' the level readings, then, A_1 and A_2 being the true azimuths, we have

$$A_1 = A' + \Delta A + (l' - l_0)\cot z' + c \operatorname{cosec} z'$$
$$A_2 = A'' - \Delta A - (l'' - l_0)\cot z'' - c \operatorname{cosec} z''$$

The difference between A_1 and A_2 may be accurately computed from the known place of the star, and a small error in its assumed place will not sensibly affect this difference If the star is near the meridian (which will be advisable), the change in azimuth will be sensibly proportional to the interval of time between the two observations. so that if T' and T'' are the sidereal clock times, and δA the change of azimuth in one second, we shall have

$$A_2 - A_1 = \delta A\,(T'' - T') \tag{209}$$

in which $T'' - T'$ is in seconds; and δA may be found by the differential formula

$$\delta A = \frac{dA}{dT} = \frac{15'' \cos\delta \cos q}{\sin z}$$

where $\delta =$ the star's declination, and the parallactic angle q is found by Art 15 of Vol I The difference of the above equations will then give us the equation

$$-ml_0 + nc = p \tag{210}$$

where, to abbreviate, we denote the known quantities as follows:

$$\left.\begin{aligned} m &= \cot z' + \cot z'' \qquad n = \operatorname{cosec} z' + \operatorname{cosec} z'' \\ p &= A'' - A' - (A_2 - A_1) - l' \cot z' - l'' \cot z'' \end{aligned}\right\} \tag{211}$$

In like manner, the low star gives a similar equation,

$$-m' l_0 + n'c = p' \tag{212}$$

and from the two equations the unknown quantities l_0 and c are found by the usual method of elimination If a greater number

of stars have been observed, the equations may be combined by the method of least squares Where there is a collimator, it may always be used as the low star of this method

214 To determine the index correction ΔA, observe any known star in either position of the instrument, then, having computed its true azimuth A (Vol I Art 14), we have

$$\Delta A = A - (A' \pm b \cot z \pm c \operatorname{cosec} z) \tag{213}$$

215. With a portable instrument, such as is described in Art 210, the use of a collimator is impracticable, since the telescope is at the extremity of the axis, and, therefore, cannot be directed towards the collimator in both positions We must then employ stars, as in the preceding article, but, as in portable instruments the inclination b is usually found directly by the striding level, a single star observed in both positions of the instrument will suffice If we take the *pole star* when near the meridian, we can suppose z to have the same value for both observations, and we shall have the two equations

$$A_1 = A' + \Delta A + b' \cot z + c \operatorname{cosec} z$$
$$A_2 = A'' + \Delta A - b'' \cot z - c \operatorname{cosec} z$$

whence

$$c = \tfrac{1}{2}\left[A'' - A' - (A_2 - A_1)\right] \sin z - \tfrac{1}{2}(b' + b'') \cos z \tag{214}$$

and it will then be expedient to determine ΔA at the same time from either A_1 or A_2

216 If instead of a single vertical thread there are several such threads, the *horizontal transit* of the star is observed over each by the clock, as in ordinary transit observations, the reading of the horizontal circle remaining constant If the star is not too far from the equator, the intervals of time between the transits over the threads may be assumed to be proportional to the distances of the threads, and then the mean of the times will be the time of the star's transit over the mean thread The collimation constant c, determined from stars as in the preceding articles, will then be that of the mean thread

If some of the threads have failed to be observed, let f_1, f_2, &c be the distances of the threads from the mean thread, positive for threads on the same side of the mean as the vertical circle,

and let f_0 be the mean of the distances of the threads observed, and T_0 the mean of the observed times. Then $f_0 + c$ is the distance of the mean of the observed threads from the collimation axis; and the azimuth at the time T_0 is found by the formula (206), substituting $f_0 + c$ for c.

217. If, however, we wish to proceed rigorously, we can reduce each thread to the mean thread by the complete formula (138),

$$\sin I = \frac{\sin f}{\cos \delta \cos n \cos t} + 2 \tan t \sin^2 \tfrac{1}{2} I$$

where I is the interval of time in which the star describes the distance f, and $t = \tau - m$, τ being the *east* hour angle of the star, and m and n being determined by (78). But we can simplify this formula for our present purpose as follows. Let A, Fig. 50, be the point in which the horizontal axis of the instrument meets the sphere when produced through the circle end (as in Fig. 49); Z the zenith, P the pole, O the star when in the collimation axis of the telescope. Since the small inclination of the horizontal and vertical axes will not sensibly affect the thread intervals, we can here regard A as the pole of the vertical circle ZO, and the triangle OPD may be regarded as right angled at D. In this triangle we have, according to the definitions of m, n, and τ in Art. 123, the angle $OPD = OPZ - APZ = -\tau - (90° - m) = -90° - t$, and the side $PD = AP - 90° = (90° - n) - 90° = -n$. We have also $OP = 90° - \delta$, and the parallactic angle $POD = q$. Hence

Fig. 50

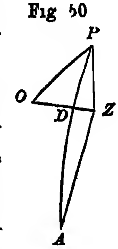

$$\begin{aligned} \cos n \cos t &= -\cos q \\ \tan t &= \tan q \sin \delta \end{aligned}$$

and our formula becomes

$$\sin I = -\frac{\sin f}{\cos \delta \cos q} + 2 \sin \delta \tan q \sin^2 \tfrac{1}{2} I$$

This applies for circle left. For circle right it is only necessary to change the sign of the first term, so that the complete formula is

$$\sin I = \mp \frac{\sin f}{\cos \delta \cos q} + 2 \sin \delta \tan q \sin^2 \tfrac{1}{2} I \qquad (215)$$

in which we take $\begin{bmatrix}\text{upper}\\ \text{lower}\end{bmatrix}$ sign for $\begin{bmatrix}\text{circle L}\\ \text{circle R}\end{bmatrix}$, and I will be the correction algebraically additive to the observed time on a thread to reduce it to the mean thread The angle q is found by the formula

$$\sin q = \frac{\sin A \cos \varphi}{\cos \delta} \tag{216}$$

where q will have a negative value for a negative value of $\sin A$, that is, for a star east of the meridian

It is evident that, except for stars of considerable declination, the last term of (215) will be inappreciable, and that we may usually take

$$I = \mp \frac{f}{\cos \delta \cos q} \tag{217}$$

which amounts to assuming that I is proportional to f, as in the preceding article

218. To find the equatorial values f of the thread intervals we observe the transit of a slow moving star near the meridian and from the observed intervals I we deduce

$$\sin f = \mp \sin I \cos \delta \cos q$$

219. *Zenith distances* —Let Z, Fig 51, be the zenith, Z' and A the points in which the vertical and horizontal axes meet the celestial sphere, $BB'O'$ the great circle of which A is the pole, and, consequently, the circle which represents the vertical circle of the instrument This circle is also that which is described by the collimation axis of the telescope Let the star O be observed on horizontal thread OO', which is perpendicular to the great circle BO' and coincides with the arc AO' produced The point B',

Fig 51

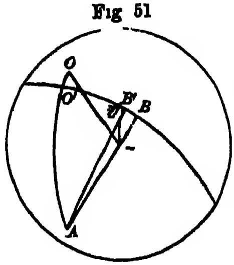

which AZ' produced meets the circle BB', represents the extremity of that diameter of the alidade circle which is in the plane of the vertical axis of the instrument The arc $B'O'$, or the angle $B'AO'$ which it measures, is then the zenith distance as given directly by the circle when the circle readings for B' and O' are given Let the reading of the circle, when the thread is at B', be denoted by ζ_0, and the reading on the star by ζ, and put $B'O'$ or $B'AO' = z_1$, then, for circle left,

$$z_1 = \zeta_0 - \zeta$$

the graduations of the circle being supposed to increase from right to left Now, for different azimuths the relative position of B and B' is different, and they coincide only when the point A is in the plane of the circle ZZ' Their relative position at any time is given by the level attached to the alidade circle, for let l_0 be the reading of the level when B and B' coincide, and l the reading in any other case, then, denoting BB' by Δz_1, we have

$$\Delta z_1 = l_0 - l$$

where we take the left-hand end of the level as the positive end, the observer facing the circle, and l is half the algebraic sum of the readings of the ends of the bubble

Let us now denote the arc BO' by z', then we have

$$z' = z_1 + \Delta z_1$$

and in the triangle AOZ we have the required true zenith distance $ZO = z$, the angle $OAZ = z'$, and, in accordance with the notation before employed, $AO = 90° + OO' = 90° + c$, $AZ = 90° - b$ Hence

$$\cos z = -\sin c \sin b + \cos c \cos b \cos z'$$

Substituting $\cos z' = \cos^2 \tfrac{1}{2} z' - \sin^2 \tfrac{1}{2} z'$, we obtain

$$\begin{aligned} \cos z &= -\sin c \sin b \,(\cos^2 \tfrac{1}{2} z' + \sin^2 \tfrac{1}{2} z') \\ &\quad + \cos c \cos b \,(\cos^2 \tfrac{1}{2} z' - \sin^2 \tfrac{1}{2} z') \\ &= \cos (c + b) \cos^2 \tfrac{1}{2} z' - \cos (c - b) \sin^2 \tfrac{1}{2} z' \\ \cos z' - \cos z &= 2 \sin \tfrac{1}{2} (z + z') \sin \tfrac{1}{2} (z - z') \\ &= 2 \sin^2 \tfrac{1}{2} (c + b) \cos^2 \tfrac{1}{2} z' - 2 \sin^2 \tfrac{1}{2} (c - b) \sin^2 \tfrac{1}{2} z' \end{aligned}$$

The second member involving only the squares of the small quantities c and b, the correction $z - z'$ is very small, so that for the factor $\sin \tfrac{1}{2}(z + z')$ we may take $\sin z' = 2 \sin \tfrac{1}{2} z' \cos \tfrac{1}{2} z'$ Hence, substituting the arcs for the sines of the quantities $\tfrac{1}{2}(z - z')$, $\tfrac{1}{2}(c + b)$, $\tfrac{1}{2}(c - b)$, we find

$$z - z' = \left(\frac{c + b}{2}\right)^2 \sin 1'' \cot \tfrac{1}{2} z' - \left(\frac{c - b}{2}\right)^2 \sin 1'' \tan \tfrac{1}{2} z' = \varepsilon \qquad (218)$$

and ε will denote the correction for collimation and the inclination of the horizontal axis Substituting the value of z' above given, we find as the value of the zenith distance given by the observation *circle left*,

$$z = \zeta_0 - \zeta + l_0 - l + \varepsilon$$

In this equation the constants ζ_0 and l_0 are unknown, but if we now revolve the instrument 180° in azimuth, and observe the zenith distance of the same point, we shall have

$$z_1 = \zeta' - \zeta_0 \qquad \Delta z_1 = -(l_0 - l')$$

where ζ' and l' denote the new readings of circle and level; and hence, for *circle right*,

$$z = \zeta' - \zeta_0 - l_0 + l' + \varepsilon'$$

in which ε' is computed by the formula

$$\varepsilon' = \left(\frac{c' + b'}{2}\right)^2 \sin 1'' \cot \tfrac{1}{2} z' - \left(\frac{c' - b'}{2}\right)^2 \sin 1'' \tan \tfrac{1}{2} z'$$

c' and b' being the collimation and the inclination of the horizontal axis in this second observation The mean of the two values of z is

$$z = \tfrac{1}{2}(\zeta' - \zeta) + \tfrac{1}{2}(l' - l) + \tfrac{1}{2}(\varepsilon' + \varepsilon) \tag{219}$$

Their difference gives the constant quantity

$$\zeta_0 + l_0 = \tfrac{1}{2}(\zeta' + \zeta) + \tfrac{1}{2}(l' + l) + \tfrac{1}{2}(\varepsilon' - \varepsilon) \tag{220}$$

If the observed point is moving, as in the case of a star, the value of z obtained by (219) is the zenith distance at the mean time between the two observations, and, in general, if a series of zenith distances is taken, one half in each position of the circle, and if ζ denotes the mean of all the readings of the circle in the first position, ζ' the mean of all the readings in the second position, l and l' the corresponding means of the readings of the circle level, the value of z given by (219) will be the zenith distance at the mean of all the observed times, *provided* always that the series is not extended so far as to introduce second differences of the change of zenith distance The correction for second differences, when necessary, may be found by Vol I Art 151

The corrections ε and ε' are, however, usually rendered insensible in practice by observing the star only in the middle of the field, or as near the middle vertical thread as possible, which is effected by giving the instrument a slow motion in azimuth while the star passes obliquely across the field, and thus keeping the middle thread constantly upon the star until it is bisected by the horizontal thread.

220 The equation (220) gives the constant $\zeta_0 + l_0$ only when the observed point is fixed The cross thread of a collimating telescope, or a distant terrestrial object, may be used as such a fixed point, and, making the observations in the two positions of the circle only in the middle of the field, we shall have $\varepsilon' - \varepsilon = 0$: so that if we denote this constant by Z we shall have

$$Z = \tfrac{1}{2}(\zeta + \zeta') + \tfrac{1}{2}(l + l') \tag{221}$$

With this constant thus determined, a single observation of a star, in either position of the instrument, will suffice to determine its zenith distance, since we shall then have

$$\left.\begin{array}{ll} z = Z - (\zeta + l) & \text{for circle L} \\ z = (\zeta' + l') - Z & \text{" \quad " \quad R} \end{array}\right\} \tag{222}$$

The constant Z expresses the *zenith point of the instrument*, since in any position of the instrument it is equal to the corrected circle reading when the observed object is in the zenith

If we wish to deduce Z from the two observations of a star, at the times T and T', we must compute the difference between the zenith distances for the interval $T' - T$, which, when the interval is small, may be done by the differential formula

$$\Delta z = (T' - T)\frac{dz}{dt} = (T' - T)\cos\varphi \sin A$$

in which $T' - T$ is supposed to be reduced to seconds of arc; and then we shall have

$$Z = \tfrac{1}{2}(\zeta + \zeta') + \tfrac{1}{2}(l + l') - \tfrac{1}{2}\Delta z$$

It should be remarked that when ζ' is numerically less than ζ we should increase it by 360°, both in finding z and Z

When the two observations, in opposite positions of the axis, are made very near to the meridian, it will be advisable to reduce each to the meridian by applying the correction for circum-meridian altitudes, Vol I equation (289) or (290)

Example —To determine the zenith point of an Ertel universal instrument, the telescope was directed towards a distant terrestrial object, and the horizontal thread was brought into coincidence with a sharply defined point in the object, twice in each position of the vertical circle The readings of the circle

and level were as below The graduations of the level proceed continuously from the right to the left end of the tube, so that the values of l are simply the arithmetical means of the readings of the two ends of the bubble The value of one division $= 2''\ 0$

	Circle readings			Level readings		l
Circle L	180°	2′	30″	40 2	14 6	27 4
	180	2	35	40 4	14 5	27 45
Circle R	359	56	20	38 2	12 8	25 5
	359	56	30	38 5	12 9	25 7

Hence, taking the means, we have

$$\begin{aligned} \zeta &= 180^\circ\ \ 2'\ 32''\ 5 \\ \zeta' &= 359\ \ 56\ \ 25 \\ \zeta_0 &= 269\ \ 59\ \ 28\ \ 75 \\ l_0 &= \qquad\ \ +\ 53\ \ 04 \\ Z &= 270\ \ \ 0\ \ 21\ \ 79 \end{aligned} \qquad \begin{aligned} l &= 27\ 43 \\ l' &= 25\ 60 \\ l_0 &= 26\ 52 = 53''\ 04 \end{aligned}$$

A series of zenith distances of the sun's lower limb near the meridian was then taken, as follows

	Circle reading			Level reading		Circle reading corrected for level				Observed zenith distance			
Circle L	229°	50′	50″	38 4	12 7	229°	51′	41″	1	40°	8′	40″	7
	229	57	15	38	12 3	229	58	5	3	40	2	16	5
	230	2	5	37	11 5	230	2	53	5	39	57	28	3
	230	5	15	37 6	12	230	6	4	6	39	54	17	2
	230	7	0	37	11 4	230	7	48	8	39	52	33	0
Circle R	309	52	15	33 4	7 9	309	52	56	3	39	52	34	5
	309	54	10	33	7 4	309	54	50	4	39	54	28	6
	309	57	50	33 6	8 0	309	58	31	6	39	58	9	8
	310	2	40	33 8	8 3	310	3	22	1	40	3	0	3
	310	9	15	34	8 8	310	9	57	8	40	9	36	0

Here we have, at the first observation,

$$\zeta = 229^\circ\ 50'\ 50'' \qquad l = +\overset{\text{div}}{25\ 55} = +\ 51''\ 1$$

and hence the corrected circle reading is

$$\zeta + l = 229^\circ\ 51'\ 41''\ 1$$

The correction ε being neglected, as all the observations were made near the middle vertical thread, we obtain the observed zenith distance by subtracting this number from the above reading Z of the zenith point, whence $z = 40° \, 8' \, 40''.7$

In like manner, the fifth observation gives $\zeta' + l' = 309° \, 52' \, 56''.3$, from which Z is subtracted to obtain the observed zenith distance The results are given in the last column

These observations have been employed in Vol I Art. 171, as circummeridian zenith distances for determining the latitude

221 In the methods of observation above adopted, a knowledge of the deviations i and i' of the horizontal and vertical axes from their normal positions is not required it is only necessary that they should be small Their values, however, can be readily investigated In the triangle AZZ', Fig 51, we have the angle $ZAZ' = BB' = \Delta z_1 = l_0 - l$, as given by the level of the vertical circle, and this triangle gives, with the notation of Art 211,

$$\sin \Delta z_1 = \frac{\sin i \sin a'}{\cos b}$$

or, taking a for a',

$$i \sin a = l_0 - l$$

At the same time, we have, from the level b of the horizontal axis,

$$i \cos a + i' = b$$

Now, revolving the instrument 180°, the angle a becomes $a + 180°$, and if the level reading of the vertical circle alidade is now l', and the inclination of the horizontal axis is b', we have

$$\begin{aligned} -\, i \sin a &= l_0 - l' \\ -\, i \cos a + i' &= b' \end{aligned}$$

Hence, combining these equations with the former ones, we find

$$\left. \begin{aligned} i \sin a &= \tfrac{1}{2}(l' - l) \\ i \cos a &= \tfrac{1}{2}(b - b') \end{aligned} \right\} \quad (223)$$

which determine i and a; and for i' we have

$$i' = \tfrac{1}{2}(b + b') \qquad (224)$$

We can, also, find i and i' from the inclinations of the horizontal

axis alone Let the alidade of the azimuth circle be set at any assumed reading A', and then also at $A' + 120°$ and $A' + 240°$, and let b, b', b'', be the inclinations of the horizontal axis given by the spirit level in the three positions Then we have

$$\begin{aligned} i \cos a + i' &= b \\ i \cos (a + 120°) + i' &= b' \\ i \cos (a + 240°) + i' &= b'' \end{aligned}$$

the sum of which, since $\cos (a + 120°) + \cos (a + 240°) = - \cos a$, gives

$$i' = \tfrac{1}{3} (b + b' + b'') \tag{225}$$

This, subtracted from the 1st equation, gives

$$i \cos a = \frac{2 b - b' - b''}{3} \tag{226}$$

and the difference of the 2d and 3d equations gives

$$i \sin a = \frac{b'' - b'}{\sqrt{3}} \tag{227}$$

which determine i and a This method may be used for instruments intended only for the measurement of horizontal angles In other instruments, both methods may be used, and the accordance of the results will indicate the degree of perfection in the workmanship of the vertical pivots of the instrument.

222 If there are several horizontal threads, the *vertical transit* of the star over each may be observed, revolving the instrument slowly in azimuth, so as to make the transit occur in the middle of the field The level of the alidade should be read both before and after the observation, and the mean taken as the value of l at the mean of the times of observation When the star is not near the meridian, the zenith distance represented by the mean of the threads may be assumed to correspond to the mean of the observed clock times, but when near the meridian a correction for second differences will be necessary

In Vol I Art 151, we have found that if T_1, T_2, T_3, &c are the several clock times, and T their mean, the corrected time corresponding to the mean of the zenith distances is

$$T_0 = T + \tfrac{1}{15} k m_0 \tag{228}$$

in which, t being the hour angle, A the azimuth, and q the parallactic angle of the star,

$$k = \frac{\cos A \cos q}{\sin t}$$

and m_0 is the mean of the quantities

$$\frac{2 \sin^2 \frac{1}{2} (T_1 - T)}{\sin 1''}, \qquad \frac{2 \sin^2 \frac{1}{2} (T_2 - T)}{\sin 1''}, \ \&c.$$

which can be taken from Table V

For the moon, the correction will be

$$\tfrac{1}{15} (1 - \lambda)^2 k m_0 = \frac{k m_0}{15 B^2}$$

log B being found as in Art. 154

If the transit is defective, that is, if only a portion of the threads have been used, it will be necessary to apply to the circle reading a correction which will be the difference between the mean of the threads observed and the mean of all the threads. Thus, f denoting the distance of any thread from the mean of all, and n the number of threads observed, the correction of the circle reading will be $\frac{1}{n} \Sigma f$ The value of f for each thread will be most readily found from complete vertical transits of stars which are not so near to the meridian as to require a correction for second differences, since we can then use the differential formula

$$f = 15 I \times \frac{dz}{dt} = 15 I \cos \varphi \sin A$$

in which I is the interval between the observed time on a thread and the mean of all the times

To compute f with regard to second differences, see Vol I. Art. 150

223 *Correction of the observed azimuth and zenith distance of the limb of the moon or a planet for defective illumination*—I shall here consider only the case where the defective limb of a spherical body has been observed The formulæ for the more general case of a spheroidal planet may easily be deduced from those given in Vol I (occultations of a planet), but they are rarely if ever required We can obtain the formulæ necessary for our

present purpose from those given in Arts 157 and 207 of the present volume It is evident that in computing the apparent outline of the disc of a planet as illuminated by the sun, any system of co-ordinates may be used, provided the places of the sun and planet are expressed in the same system If, then, we here substitute the zenith for the pole, and, consequently, the horizon for the equator, we have only to substitute zenith distance for polar distance and azimuth for right ascension, or rather the negative of the azimuth, since the azimuth is reckoned from left to right, while right ascension is reckoned from right to left Putting, therefore,

d = the sun's zenith distance,
a = " azimuth,
A = the planet's azimuth,
s = the planet's apparent semidiameter,
R, R' = the heliocentric distances of the earth and planet, respectively,

we have, by (124), for computing the horizontal perpendicular from the centre of a planet upon the vertical thread in contact with the defective limb, the formulæ

$$\left.\begin{aligned} \sin\chi &= \frac{R}{R'}\sin d\sin(a - A) \\ s'' &= s\cos\chi \end{aligned}\right\} \quad (229)$$

The value of $\sin\chi$ will be positive or negative according as the 2d or the 1st limb is defective The value of s may be found from its mean value given in Vol I p. 578

For the moon we can put $R = R'$

Since we wish to deduce from the observed azimuth of the defective limb that of the true limb, the correction of the circle reading will evidently be

$$\delta A = \frac{s - s''}{\sin z} = \frac{s \operatorname{versin}\chi}{\sin z} \quad (230)$$

Again, for computing the vertical perpendicular from the centre of a planet upon the horizontal thread in contact with the defective limb, we deduce from (200), by changing the co-ordinates,

$$\sin\chi = \frac{R}{R'}[\sin z\cos d - \cos z\sin d\cos(a - A)] \quad (231)$$

or, by introducing an auxiliary,

$$\left.\begin{aligned} \tan E &\doteq \tan d \cos(a - A) \\ \sin \chi &= \frac{R}{R'} \frac{\sin(z - E)\cos d}{\cos E} \end{aligned}\right\} \qquad (231^*)$$

and the correction to reduce the observed zenith distance to that of the true limb will be

$$\delta z = s \text{ versin } \chi \qquad (232)$$

A negative value of $\sin\chi$ will indicate that the upper limb is defective

EXAMPLE 1 —The following observations of the azimuths of *Regulus* and of the moon's 1st limb were made at Greenwich with the "Alt-azimuth," May 3, 1852

	Vertical circle	Clock time of transit	Circle reading $= A'$	Level $= l$	Clock corr
☽ 1 L	Left	$11^h\ 26^m\ 12^s\ 95$	$140°\ 39'\ 39''\ 71$	$-19''\ 79$	$+11^s\ 46$
☽ 1 L	Right	12 3 11 30	328 45 10 76	-20 14	11 51
Regulus	Right	12 31 55 37	62 54 43 04	-21 49	11 55
Regulus	Left	12 45 26 33	246 34 47 08	-19 28	11 57

The clock time is the mean of the transits over six vertical threads The clock correction is the reduction to sidereal time. The circle readings are the means of four microscopes. The level reading is the mean of the indications of six levels, permanently attached to the instrument, parallel to the horizontal axis The level zero, found by the method of Art 213, was

$$l_0 = -30''\ 16$$

The collimation constant for the mean of the threads was, for circle left,

$$c = +2''\ 68$$

The observations being taken for the purpose of determining the moon's azimuth, we shall first find the index correction of the circle from the known star *Regulus* From the Nautical Almanac, we take

$$\begin{aligned} \textit{Regulus}, \text{ R A } &= \quad 10^h\ 0^m\ 29^s\ 32 \\ \text{" } \quad \text{Decl } &= +12°\ 41'\ 16''\ 6 \end{aligned}$$

The hour angles of the star at the two observations are, therefore,

Circle R $t = 2^h\ 31^m\ 37^s.60$
Circle L $t = 2\ \ 45\ \ 8\ \ 58$

with which and the latitude $\varphi = 51°\ 28'\ 37''\ 84$ we find, by Vol I Art 14, the star's true azimuth and approximate zenith distance,

Circle R $A = 52°\ 10\ 13''\ 10$ $z = 49°\ 22'$
Circle L $A = 55\ \ 50\ \ 39\ \ 25$ $z = 51\ \ 4$

The zenith distances are apparent, i e affected by refraction The instrumental corrections for the star are then as follows

	$b = l - l_0$	$\pm b \cot z$	$\pm c \operatorname{cosec} z$
Circle R	$+\ 8''\ 67$	$-\ 7''\ 45$	$-\ 3''\ 53$
Circle L	$+10\ \ 88$	$+\ 8\ \ 79$	$+\ 3\ \ 45$

The corrected circle readings are, therefore (adding 180° to the reading for Circle R.),

	Corrected A'
Circle R	242° 54′ 32″ 06
Circle L	246 34 59 32

which, compared with the true azimuths A above found, give the index correction

	ΔA
Circle R	169° 15′ 41″ 04
Circle L	169 15 39 93
Mean $\Delta A =$	169 15 40 48

In the next place, to reduce the observations of the moon there were given the moon's apparent zenith distances (affected by parallax and refraction),

Circle L $☽\, z = 77°\ 11'$
Circle R $☽\, z = 73\ \ 17$

whence we find the instrumental corrections to be as follows:

	$b = l - l_0$	$\pm b \cot z$	$\pm c \operatorname{cosec} z$
Circle L	$+ 10''\,37$	$+ 2''\,36$	$+ 2''\,75$
" R	$+ 10\;\;02$	$- 3\;\;01$	$- 2\;\;80$

Applying these and the above found index correction, the true azimuths of the limb, as observed, were

Circle L	At $11^h\,26^m\,24^s\,41$	Sid time,	$A = 309°\,55'\,25''\,30$
" R	" $12\;\;3\;\;22\;\;81$	" "	$A = 318\;\;0\;\;45\;\;43$

But the moon's limb was slightly gibbous; and we must yet apply the correction given by our formulæ (229) and (230) As the correction will not be sensibly different for the two observations, we may compute it for the middle instant between them, which corresponds to the mean solar time $8^h\,57^m\,16^s$. For this time, we find

$$\text{Sun's } \alpha = 2^h\,44^m\,15^s\,74$$
$$\text{"} \quad \delta = +\,15°\,54'\,6$$

from which we deduce the sun's azimuth and zenith distance

$$a = 136°\,4'\,9 \qquad d = 102°\,8'\,1$$

and hence, taking $A = 313°\,58'\,1$ (the mean value), we find

$$\log \sin \chi = n8\,5570$$

Since $\sin \chi$ is negative, the first limb is defective Then, since $s = 16'\,36''.5$, and the mean value of $z = 75°\,14'$,

$$dA = \frac{s \operatorname{versin} \chi}{\sin z} = 0''.67$$

which is to be added to the above values of A to obtain the azimuths of the true limb

EXAMPLE 2 —The following observations of the zenith distances of the collimator and of the moon's lower limb were made at Greenwich with the "Alt-azimuth," Sept 21, 1852.

		Circle reading $= \zeta$	Level reading $= l$	$\zeta + l$
Collimator	Circle L	$315°\,47'\,57''\,53$	$74''\,63$	$315°\,49'\,12''\,16$
	" R	$160\;\;23\;\;30\;\;34$	$82\;\;46$	$160\;\;24\;\;52\;\;80$
				$Z = 58\;\;7\;\;2\;\;48$

The vertical transit of the moon was observed on six horizontal threads, as follows

	Thread	Clock	$T_n - T$	$m = \frac{2 \sin^2 \frac{1}{2}(T_n - T)}{\sin 1''}$
☽ L L Circle L	I	$19^h\ 38^m\ 11^s.5$	$-3^m\ 43^s.4$	$27''.22$
	II	39 47.0	−2 7.9	8.93
	III	41 16.0	−0 38.9	0.83
	IV	42 42.5	+0 47.6	1.24
	V	44 5.5	+2 10.6	9.30
	VI	45 27.0	+3 32.1	24.53
	$T =$	19 41 54.92		$m_0 = 12.01$

$$
\begin{aligned}
T &= 19\ 41\ 54.92 \\
\text{Clock corr} &= \quad +\ 7.90 \\
\text{Sid. time} &= 19\ 42\ \ 2.82
\end{aligned}
$$

$$
\begin{aligned}
\text{Circle reading } \zeta &= 341^\circ\ 27'\ 12''.55 \\
\text{Level } \quad " \quad l &= \qquad + 80.90 \\
\zeta + l &= 341\ \ 28\ \ 33.45 \\
Z &= 58\ \ \ 7\ \ \ 2.48 \\
z &= 76\ \ 38\ \ 29.03
\end{aligned}
$$

This zenith distance does not correspond precisely to the mean time T, on account of the moon's proximity to the meridian. To obtain the correction for second differences by our formula (228), we have found above the differences between the several clock times and T, and also the mean (m_0) of the corresponding values of m. Then, to compute the coefficient k, we have the approximate azimuth of the moon at the time of observation,

$$A = +\ 8^\circ\ 58'.8$$

and the moon's declination,

$$\delta = -\ 23^\circ\ 34'.5$$

Hence, with $\varphi = 51^\circ\ 28'.6$, by the formulæ

$$\sin q = \frac{\sin A}{\cos \delta} \cos \varphi \qquad \sin t = \frac{\sin A}{\cos \delta} \sin z$$

we find

$$\log \sin q = 9.0257, \qquad \log \sin t = 9.2194$$

and then

$$\log k = 0.7727$$

The change of the moon's right ascension in one minute of mean time was $2^s.40$; and hence, by the table in Art. 154,

$$\text{ar co} \log B = \log(1 - \lambda) = 9.9823$$

We have, therefore, the correction

$$\tfrac{1}{15}(1 - \lambda)^2 k m_0 = + 4^s.37$$

which, being added to the sidereal time above found, gives $19^h\ 42^m\ 7^s.19$ as the sidereal time corresponding to the apparent zenith distance $76^\circ\ 38'\ 29''.03$

It should be observed that in the observation of the collimator one of the horizontal threads is made to bisect the cross thread of the collimator, and, therefore, in order to make the circle readings correspond to the mean of the threads, they must be increased by the distance of the horizontal thread employed from the mean In the above observations the 4th thread was employed, the distance of which from the mean of the six threads was $1'\ 0''.46$ This quantity is included in the circle readings above given, so that they represent the readings that would have been obtained if the fictitious thread called the mean thread had actually been observed in coincidence with the threads of the collimator

In conclusion, it is to be remarked that stars may be observed both directly and by reflection in a mercury horizon, in which case the difference of the readings of the vertical circle (corrected for any change in the alidade levels, &c) will be twice the altitude The combination of the reflected observations in both positions of the axis gives the nadir point of the instrument, precisely as the zenith point is obtained from the direct observations The method of conducting such observations will be readily inferred from what has already been said under Meridian Circle, Art 200

[For an example of the use of a portable instrument in determining the longitude of a place by the moon's azimuth, see Vol. I. p. 380.]

CHAPTER VIII

THE ZENITH TELESCOPE.

224. THE zenith telescope is a portable instrument specially adapted for the measurement of *small differences* of zenith distance It is essentially the invention of Capt ANDREW TALCOTT, of the U S Corps of Engineers (in 1834), but, having been exclusively adopted in the U S Coast Survey for the determination of latitudes, it has there received several improvements, which have given it a more general character than it possessed at first As now constructed, it can be used at all zenith distances, and may be regarded as designed for the comparison of any two nearly equal zenith distances in any azimuths The method of finding the latitude by this instrument, now known as *Talcott's Method*, is one of the most valuable improvements in practical astronomy of recent years, surpassing all previously known methods (not excepting that of BESSEL by prime vertical transits) both in simplicity and in accuracy

Plate XIII represents one of the zenith telescopes of the U. S Coast Survey The telescope is attached to one end of a horizontal axis *Q*, and is counterpoised by a weight *O* at the other end, which is so connected with the telescope by the curved lever *P*, *P*, *P* as to tend not only to equalize the pressure of the axis *Q* upon the two Vs, but to prevent the flexure of the axis The Vs of the horizontal axis, one of which is seen at *N*, are connected with each other by the horizontal bar *M*, and thereby to the vertical column *C* This column revolves about a vertical axis and carries a vernier and clamp *e*, by means of which it may be set at any reading of the horizontal circle *BB* The vertical axis and horizontal circle are secured to a tripod, the feet of which, *A*, *A*, *A*, are levelling screws for adjusting the verticality of the axis The striding level *S* is applied to the horizontal axis, as in the case of the transit instrument

We now come to the distinctive features of the instrument, the spirit level *L* and the micrometer *E*. The level *L* is at right

angles to the horizontal axis, and, consequently, in the plane of motion of the telescope, and is firmly connected with the bar H, which revolves upon a centre secured to the telescope so that it may be placed at any angle with the optical axis of the telescope. In order to set the level at any given angle approximately, the bar H carries a vernier, which by the clamp I can be fixed at any reading of the vertical circle K, and this circle is permanently connected with the telescope This circle, being graduated from 0° at its middle point to 90° in each direction, will, when properly adjusted, give the zenith distance of a star towards which the telescope is directed when the bubble of the level is in the middle of the tube, and it therefore serves as a finder by setting the vernier upon the given zenith distance of a star and then revolving the telescope until the bubble plays When the telescope is thus approximately set, it is clamped by the screw G, which acts upon a circular collar around the horizontal axis, and then a fine motion in zenith distance can be given to the telescope by the tangent screw F This fine motion is required only in bringing the bubble of the level nearly to the middle of the tube

E is a filar micrometer with one or more movable threads carried by a single micrometer screw with a graduated head reading directly to hundredths of a revolution, and by estimation to thousandths In the instruments in use, one revolution is usually less than 50″, and hence each observation is read off, by estimation, within less than 0″ 05 There are usually added several fixed vertical threads, so that the instrument can be used as a transit instrument when required

In the preliminary adjustment, when setting up the instrument, the test of the verticality of the axis C is that the reading of the striding level S is not changed while the instrument makes a complete revolution in azimuth The perpendicularity of the horizontal and vertical axes Q and C is proved when, after having made C vertical, Q is horizontal, and the latter is proved by reversing the level S upon the axis

The middle transit thread can be approximately adjusted by causing it to coincide with a very distant terrestrial point in two positions of the telescope for which the readings of the horizontal circle differ exactly 180° This, however, is but an approximation, for there will be a parallax in the apparent position of any terrestrial point as observed in the two positions,

since the absolute position of the centre of the telescope is changed by twice its constant distance from the vertical axis We can easily compute the amount of this parallax in a given case and allow for it; for if $d =$ the distance of the centre of the telescope from the vertical axis, $D =$ the distance of the object, and $p =$ the parallax, we have

$$p = \frac{d}{D \sin 1''}$$

but, as the horizontal circle is not designed for very accurate measures, it will not usually be worth while to use this method further than to make a first adjustment A perfect adjustment can be directly effected by the use of two collimating telescopes (Transit Inst, Art 145), for which we can temporarily use the telescopes of two theodolites or other field instruments at hand When the instrument is used as a transit, the collimation constant can be determined from a number of stars observed in the two positions of the axis by the method of least squares, supposing two different azimuths but the same collimation in the two sets of equations of condition, as in the example, p. 202

The verticality of the transit threads is proved by the methods used for the transit instrument

In finding the latitude by meridian observations, the instrument is frequently revolved in azimuth 180° for the alternate observation of north and south stars, and, to save time in this operation, two stops, *b*, *b*, are provided, which can be clamped at any points of the limb of the horizontal circle, and, consequently, at such points that the telescope shall be in the meridian when the clamp *e* bears against either stop

225 *Talcott's method of finding the latitude* —Two stars are selected which culminate at nearly equal zenith distances, one north and the other south of the zenith The difference of their zenith distances must be less than the breadth of the field of the telescope, and it is better to have it less than half this breadth, to avoid observations near the edge of the field Their right ascensions should be nearly equal, so that their transits may occur within so short a period that the state of the instrument may be assumed to have remained unchanged, but a sufficient interval should be allowed for making the necessary observation of the level and micrometer and for reversing in azimuth The stops

having been previously set (by means of some known star) so as to mark the meridian, the finding circle K is set to the mean zenith distance of the two stars, and the telescope is pointed so as to make the reading of the level L nearly zero The telescope can now be directed upon either star by revolving the instrument about the vertical axis, and this axis is supposed to be so nearly vertical that the reading of the level will not be greatly changed, since for accurate determinations with a spirit level it is always important to make the inclinations which it is to measure as small as possible, and not to use the extreme divisions The chronometer times of the transits of the stars have been previously computed from their right ascensions and the chronometer correction The instrument being set for the star which culminates first, when the star comes into the field an assistant calls the seconds of the chronometer, and the observer bisects the star by the micrometer thread as nearly as possible at the computed time of transit, or, failing in doing this satisfactorily, he bisects it soon after, and records the actual time of the observation He then reads the level and micrometer, revolves the instrument 180°, and observes the second star in the same manner

Several bisections of the star might be made while it is passing through the field, and each could be reduced to the meridian, but in the Coast Survey a single deliberate meridian observation is regarded as preferable to several circummeridian observations *

We must not fail to remark that, since the excellence of this method depends upon the invariability of the angle which the telescope and level make with each other, the observer must not touch the tangent screw I after having set for the proper zenith distance, until the observation of the two stars is completed. The same restriction does not apply to the tangent screw F, which moves the telescope and level together, and, in case the vertical axis is not very well adjusted, it may be necessary to

* The single observation is preferable on the score of simplicity in the subsequent reductions, but it cannot be regarded as more accurate than the mean of several properly taken observations The best reason for preferring the single observation is found in the present state of the star catalogues, for even the single observation with the zenith telescope is subject to a less probable error than the place of the star in most of the catalogues that have to be used It is, therefore, preferable to simplify the individual observations and to multiply observations by taking different pairs of stars

use this screw, after turning to the second star, in order to bring the bubble of the level near the middle of the scale

Now let m be the micrometer reading (reduced to arc) for the southern star Let m_0 be the micrometer reading for any point of the field arbitrarily assumed as the micrometer zero, and let z_0 be the apparent zenith distance represented by m_0 when the level reading is zero Let us also suppose that the micrometer readings increase as the zenith distances decrease. Then, if the level reading were zero, the apparent zenith distance of the star would be

$$z_0 + (m_0 - m)$$

Let l be the equivalent in arc of the level reading, positive when the reading of the north end of the level is the greater, let r be the refraction Then the true zenith distance of the southern star is

$$z = z_0 + m_0 - m + l + r$$

The quantity $z_0 + m_0$ is constant so long as the relation of the level and telescope is not changed We shall, therefore, have for the northern star

$$z' = z_0 + m_0 - m' - l' + r'$$

Hence we have

$$z - z' = m' - m + l' + l + r - r'$$

But, if δ and δ' are the declinations of the south and north stars, respectively, and φ the latitude, we have

$$\varphi = \delta + z$$
$$\varphi = \delta' - z'$$

and, therefore,

$$\left.\begin{aligned}\varphi &= \tfrac{1}{2}(\delta' + \delta) + \tfrac{1}{2}(z - z') \\ &= \tfrac{1}{2}(\delta' + \delta) + \tfrac{1}{2}(m' - m) + \tfrac{1}{2}(l' + l) + \tfrac{1}{2}(r - r')\end{aligned}\right\} \quad (233)$$

Thus, to the mean of the declinations we have to add three corrections, which I shall consider separately

226 *The correction for refraction*—The observations being usually restricted to zenith distances less than 25°, and the difference of zenith distance being necessarily less than the breadth of the field of the telescope, the difference of the refractions is

so small that the variations depending on the state of the barometer and thermometer are not sensible, and we may employ the equation

$$r - r' = (z - z')\frac{dr}{dz}$$

in which, if $z - z'$ is expressed in minutes, the differential quotient $\frac{dr}{dz}$ will denote the change of the mean refraction corresponding to a change of one minute of zenith distance If we take BESSEL's formula for the refraction,

$$r = \alpha \tan z$$

in which α may be regarded as constant for small variations of z, we have

$$\frac{dr}{dz} = \frac{\alpha \sin 1'}{\cos^2 z}$$

by which we readily form the following table:

z	$\frac{dr}{dz}$
0°	0″ 0168
5	0169
10	0173
15	0180
20	0190
25	0205

The principal term in the value of $z - z'$ is $m' - m$, and we may in practice take ($m' - m$ being expressed in minutes)

$$\tfrac{1}{2}(r - r') = \tfrac{1}{2}(m' - m)\frac{dr}{dz} \tag{234}$$

The correction for refraction then has the same sign as the correction for the micrometer *

* If we wish to consider the actual state of the air as given by the barometer and thermometer, we have only to multiply the values of $\frac{dr}{dz}$ by B and γ, whose logarithms are given in Table II

227 *The correction for level*—If we denote the readings of the north and south ends of the bubble by n and s, the inclinations observed at the observations of the south and north stars, respectively, expressed in divisions of the level, or, as I shall call them, the *level readings*, will be

$$L = \frac{n - s}{2} \qquad\qquad L' = \frac{n' - s'}{2}$$

and, putting $D =$ the value of a division of the level in seconds of arc, we shall have

$$l = LD \qquad\qquad l' = L'D$$

and the correction for the level will be

$$\tfrac{1}{2}(l' + l) = \tfrac{1}{2}(L' + L)\,D = \left(\frac{(n' + n) - (s' + s)}{4}\right) D \qquad (235)$$

Thus the correction for the level is found with its proper sign by subtracting the sum of the south end readings from the sum of the north end readings, and multiplying one-fourth the remainder by the value of a division

228 *The correction for the micrometer*—If we denote the actual micrometer readings for the south and north stars by M and M', expressed in revolutions of the screw, and put $R =$ the value of a revolution in seconds, we have

$$\tfrac{1}{2}(m' - m) = \tfrac{1}{2}(M' - M)\,R \qquad (236)$$

We have supposed the readings to increase as the zenith distances decrease, or, which is the same thing, that the readings increase from the upper part of the field towards the lower part. This is desirable only on account of the symmetry it gives to the reductions, the proper sign of the correction being determined, as in the case of the level, by always subtracting south readings from north readings But it is well to reverse the instrument occasionally, using the telescope sometimes on the right and sometimes on the left of the vertical axis, in order to eliminate any unknown peculiar error of the instrument, and in conformity with the general principle of varying the circumstances under which different determinations of the same quantity are made. This reversal, of course, reverses the sign of the readings, and therefore when the readings are the reverse of those above supposed it will be sufficient to mark them all with the negative sign, and then to proceed by the same formulæ as before.

229 *Reduction to the meridian*—When from any cause the observer fails to obtain the meridian observation, a single extra-meridian observation is usually substituted This observation may be taken in either of two ways

First The instrument is left clamped in the meridian, and the star is observed at a certain distance from the middle vertical thread, the time being noted The reduction to the meridian is then the same as for the meridian circle (Art 199), namely, τ being the hour angle of the star in seconds of time,

$$\tfrac{1}{4}(15\tau)^2 \sin 1'' \sin 2\delta$$

This is to be added to the observed zenith distance of a southern star, or subtracted from that of a northern star, and in either case one-half of it is to be added to the latitude. The correction to the latitude is, therefore,

$$x = \tfrac{1}{8}(15\tau)^2 \sin 1'' \sin 2\delta = [6\ 1347]\ \tau^2 \sin 2\delta \qquad (237)$$

when *one* of the stars of a pair is observed out of the meridian If both are so observed, two such corrections, separately computed for each, must be added If the star is south of the equator, the essential sign of the correction is negative

Secondly We may follow the star off the meridian by revolving the instrument in azimuth, keeping the star near the middle vertical thread The reduction is then the same as that of circummeridian altitudes (Vol I Art 170), namely,

$$\frac{(15\tau)^2 \sin 1''}{2} \frac{\cos\varphi \cos\delta}{\sin z}$$

which is always subtractive from the observed zenith distance, and therefore the correction to the latitude in this case will be

$$x = \pm \frac{(15\tau)^2 \sin 1''}{4} \frac{\cos\varphi \cos\delta}{\sin z} \qquad (238)$$

the upper sign for a northern and the lower for a southern star

230 *Selection of stars*—The fundamental stars whose declinations are determined with the highest degree of precision are too few to afford suitable pairs for this method, and hence we must have recourse to the smaller stars. Those of the 6th or 7th magnitude are the smallest that can be easily observed with a

portable instrument But, as the declinations of these stars are not very precisely determined, we are obliged to employ a large number of pairs in order to eliminate their errors as far as possible by taking the mean of all the results The British Association Catalogue will generally furnish from fifteen to thirty pairs for any given latitude on almost any night in the year, but, as the declinations of the stars selected will often be found to rest upon a single observation, or upon a single authority, these ought to be rejected unless they can be found also in more recent catalogues In order to secure every available pair, the catalogue should be consulted from the earliest right ascension which the daylight at the time of the beginning of the series of observations permits, to the latest hour at which it is desirable to observe.

It is found expedient to prepare a table in which all the stars which culminate within 25° of the zenith, both north and south, are arranged in the order of their right ascensions From this table suitable pairs are selected to satisfy as nearly as possible the following conditions 1st, The difference of the zenith distances in a pair should not be more than 10′, in order not to have to observe either star near the edge of the field, and also in order to lessen the effect of an error in the determination of the value of the micrometer screw 2d, The difference of the right ascensions of a pair should not be less than one minute, so as to give time to read the micrometer, and to revolve the instrument to be prepared for the second star; and not greater than about twenty minutes, to avoid changes in the state of the instrument. 3d, The interval between pairs should afford time for reading the micrometer and level, and for setting the instrument for the next pair 4th, The greater zenith distance should be as often that of the northern as that of the southern star, as an error in the value of the micrometer screw will thereby be rendered less sensible The effect of such an error would evidently be wholly insensible in the case of a pair whose zenith distances were exactly equal; and, in general, for any number of pairs the effect of such an error upon the final result will be the more nearly insensible the more nearly we approach to the condition

$$\Sigma z - \Sigma z' = 0 \tag{239}$$

231. Example —To illustrate the preceding method, I extract from the records of the U S. Coast Survey, by the kind permission of the Superintendent, a portion of the observations taken

at the *Roslyn Station*, Virginia, in July, 1852, and shall give them very nearly in the form in which they are recorded and reduced upon the survey After selecting the most suitable pairs of stars by the process above described, a list is made out for the use of the observer in preparing for each observation, as follows

Programme for Zenith Telescope

U S C S Roslyn Station, Va Approx lat = 37° 14′

Star	Mag	AR	Dec	Zen Dist		Setting
B A C 4843	6	14^h 33^m 21^s	+ 45° 3′	7° 49′	N	7° 55′
" 4902	6	14 43 37	29 14	8 0	S	
" 4902	6	14 43 37	29 14	8 0	S	8 0
" 4965	5½	14 57 55	45 14	8 0	N	
" 4991	6	15 2 2	26 52	10 22	S	10 21
" 5092	7	15 20 21	47 35	10 21	N	
" 5092	7	15 20 21	47 35	10 21	N	10 24
" 5192	5	15 36 33	26 46	10 28	S	
&c		&c				

The following are some of the observations taken by Mr Dean:

Date, 1852	Star No B A C	Star N S	Micrometer Reading	Micrometer Diff Z Dist	Level N	Level S	Level N − S	Merid dist
			Rev	Rev				
July 9	4843	N	29 590		32 4	35 0		
	4902	S	12 340	+ 17 250	34 0	35 3	− 3 9	
" 9	4902	S	12 340		34 0	35 3		
	4965	N	13 990	+ 1 650	33 8	37 0	− 4 5	
" 9	4991	S	23 810		31 2	39 5		
	5092	N	25 525	+ 1 715	39 2	33 0	− 2 1	
" 9	5092	N	25 525		39 2	33 0		
	5192	S	14 800	+ 10 725	32 8	41 0	− 2 0	
" 19	5911	N	14 805		48.5	43 6		10^s 9
	5922	S	26 675	− 11 870	43 0	49 0	− 1 1	
" 20	6453	S	8 225		44 4	49 4		20 5
	6530	N	5 360	− 2 865	50 2	43 5	+ 1 7	

The stars 5911 and 6453 were observed out of the meridian at the hour angles $10^s.9$ and $20^s.5$, respectively, the instrument remaining in the meridian.

The next step is to deduce the apparent declinations for the dates of the observations from the catalogues, using for this purpose not only the B. A. C., but also any later catalogues in which the stars can be found.

The value of a revolution of the micrometer was $R = 41''.4$ [illegible] and that of one division of the level was $D = 1''.65$. The computation of the latitude is then as follows:

Star	δ and δ'	$\frac{1}{2}(\delta + \delta')$	Corrections				Latitude
			Microm.	Level	Refr.	Merid.	
4848 4902	+45° 2′ 56″.50 +29 14 1.85	37° 8′ 29″.21	+5′ 57″.08	−1″.61	+0″.10		37° 14′ 24 [illegible]
4902 4965	29 14 1.85 45 13 48.64	37 13 52.75	+0 34.15	−1.86	+0.01		25 [illegible]
4991 5092	26 52 24.73 47 35 16.37	37 13 50.55	+0 35.50	−0.87	+0.01		25 [illegible]
5092 5192	47 35 16.87 26 46 13.52	37 10 44.95	+3 42.01	−0.83	+0.06		26 [illegible]
5911 5922	48 23 22.47 26 13 41.36	37 18 31.92	−4 5.71	−0.45	−0.07	+0.02	25 [illegible]
6453 6530	22 27 47.81 52 3 0.81	37 15 23.81	−0 59.31	+0.70	−0.02	+0.04	25 [illegible]

Mean = 37 14 25 [illegible]

232. *Discussion of the results.*—In combining the results obtained by this method, we should have regard to their respective weights. The weight of any result from a pair is a function of the probable error of the declinations of the stars and of the probable error of observation.

The probable error of an observation of a single pair, which may be denoted by e, is found by comparing all the observations on the same pair with their mean, where a sufficient number of observations have been taken. Assuming that the probable error of observation is the same for every pair of stars, we can find its mean value from all the pairs, as follows. If v_1 denote the residuals obtained by comparing the mean of the results by the first pair with n_1 individual results from that pair, v_2 the residuals obtained in like manner from a second pair on which there are n_2 observations, and so on, to m pairs, we have, according to the theory of least squares,

$$(n_1 - 1)\, ee = q^2\, [v_1 v_1]$$
$$(n_2 - 1)\, ee = q^2\, [v_2 v_2]$$

$$(n_m - 1)\, ee = q^2\, [v_m v_m]$$

where $[v_1 v_1]$ &c denote the sums of the squares of the values of v_1, &c, and q is the factor for reducing mean errors to probable errors. (See Appendix, Art 15.) The sum of these equations gives

$$(n - m)\, ee = q^2\, [vv]$$

where n denotes the whole number of individual results, or $n = n_1 + n_2 + \cdot \quad + n_m$, and $[vv]$ the sum of the squares of all the residuals, or $[vv] = [v_1 v_1] + [v_2 v_2] + \quad + [v_m v_m]$. Hence we have

$$e = q\sqrt{\frac{[vv]}{n-m}} \qquad q = 0\ 6745 \tag{240}$$

EXAMPLE —The individual results of the whole series of observations at Roslyn in July, 1852, from which the above are extracted, were as stated in the following table, in which only the seconds of latitude are given

To find the error of observation

No of pair	Lat	Means	v	vv
1	24″ 78			
2	25 05			
3	25 19 24 47	24″ 83	36 36	1296 1296
4	26 19 25 94 26 47	26 20	01 26 27	0001 0676 0729
5	25 52 26 08 26 14	25 91	39 17 23	1521 0289 0529
6	22 95 22 50	22 73	22 23	0484 0529

To find the error of observation —Continued

No of pair	Lat	Means	v	vv
7	26″ 26	25″ 93	33	1089
	25 42		51	2601
	25 .96		03	0009
	26 01		08	.0064
	25 98		05	0025
	25 96		03	0009
8	25 47	25 18	29	0841
	24 97		21	0441
	24 95		23	0529
	25 30		12	0144
	24 99		19	0361
	25 38		20	0400
9	25 17	25 89	72	5184
	25 64		25	0625
	26 00		11	0121
	26 45		56	3136
	26 17		28	0784
10	25 92	25 79	13	0169
	25 46		33	1089
	25 70		09	0081
	26 09		30	0900
11	25 15	24 53	62	3844
	24 24		29	0841
	24 43		10	0100
	24 29		24	0576
12	26 18	25 15	1 03	1 0609
	24 17		98	9604
	25 10		.05	0025
13	25 73	25 22	51	2601
	25 78		56	3136
	24 12		1 10	1 2100
	25 23		01	0001
14	24 86	24 84	02	0004
	24 55		29	0841
	25 16		32	1024
	24 80		04	0016
15	25 91	25 36	55	3025
	25 00		36	1296
	25 18		18	0324
	25 35		01	.0001

To find the error of observation —Concluded

No of pair	Lat	Means	v	vv
16	25″ 94		08	0064
	26 74	26″ 02	72	5184
	26 23		21	0441
	25 18		84	7056
17	25 82		40	1600
	26 01	25 42	59	3481
	24 99		43	.1849
	24 86		56	3136
18	26 37		29	0841
	25 94	26 08	14	0196
	25 84		24	0576
	26 16		08	0064
19	25 97		25	.0625
	25 92	25 72	20	0400
	25 60		12	0144
	25 37		35	1225
20	26 02		32	1024
	25 67	25 70	03	0009
	25 89		19	0361
	25 20		50	2500
21	26 32		39	1521
	25 49	25 93	44	.1936
	25 97		04	0016

$n = 73$ $\qquad [vv] = 11\ 0169$

$m = 19$

$n - m = 54$

Hence, $e = 0\ 6745 \sqrt{\dfrac{11\ 0169}{54}} = 0''\ 30$

This small probable error is a proof both of the great superiority of this method over all previously known methods of finding the latitude, and of the skill of the observer Possibly an unusually favorable state of the atmosphere may have conspired to give this series an unusual degree of precision, as the average experience of the observers of the Coast Survey gives the value of e somewhat greater Not to assume too high a degree of precision for the observations, the adopted value upon the Survey is

$$e = 0''\ 50$$

and even this value justifies us in asserting that the results by this method compare favorably with those obtained by first class fixed instruments of the observatory, where the measures depend upon graduated circles

But the precision of the results is impaired by the defective state of the catalogues of the smaller stars, and the necessity for using such stars in order to find suitable pairs is the only "weak point of the method" The facility of multiplying the number of pairs, on account of the extreme simplicity of the observations, in a great degree compensates for this defect

If now we denote the probable error of an observed zenith distance by e_z, we have the probable error of the observed difference $z - z' = \sqrt{2e_z^2}$, and the above value of e is the probable error of $\frac{1}{2}(z - z')$. Hence we have the relation

$$\sqrt{2e_z^2} = 2e$$

and, taking $e = 0''\ 50$,

$$e_z = e\sqrt{2} = 0''\ 71$$

which represents the combined effect of the error in bisecting the star, the culmination error, or error peculiar to a culmination arising from an anomalous variation in the refraction and affecting differently the two stars of a pair, the errors in the values of the micrometer and level divisions, and errors arising from changes in the instrument (resulting chiefly from changes of temperature) between the two observations of a pair Of these, the most important is the error in bisecting the star, which is strictly the error of observation

233 Having found the probable error of observation, we can determine that of the declinations employed For if ε is the probable error of observation of the mean value of φ deduced from all the observations of a pair, E_δ the probable error of the mean of two declinations, E_ϕ the probable error of the latitude, composed of the errors of observation and declination, we have

$$E_\phi^2 = E_\delta^2 + \varepsilon^2$$

whence

$$E_\delta^2 = E_\phi^2 - \varepsilon^2 \tag{241}$$

The mean value of E_δ for the stars employed (or for a given catalogue when all the declinations are taken from the same catalogue) will be obtained from this equation by employing in the second member mean values of E_ϕ^2 and ε^2 A mean value

of E_ϕ will be obtained from the several means obtained from the several pairs (without here attempting to assign different weights to the observations) by the usual method from the residuals The value of ε may be obtained for each pair from the single observations, when they are sufficiently numerous, but, as we wish in the present investigation to use all the observations even where a pair has been observed but once, it will be expedient to compute ε by the formula

$$\varepsilon^2 = \frac{e^2}{n}$$

in which e is the probable error of a single observation of a pair already found, and n is the number of observations of that pair Then the mean of all these values of ε^2 is to be used in (241), and this mean is, for m pairs,

$$\varepsilon^2 = \frac{e^2}{m-1}\left[\frac{1}{n}\right] \tag{242}$$

From the observations at Roslyn above given, we form the following table

To find the probable error of declination

No of pair	Lat	v	v^2	No of obs $= n$	$\frac{1}{n}$
1	24″ 78	57	3249	1	1
2	25 05	30	0900	1	1
3	24 83	52	2704	2	0 500
4	26 20	85	7225	3	0 333
5	25 91	56	3136	3	0 333
6	22 73	2 62	6 8644	2	0 500
7	25 93	58	3364	6	0 167
8	25 18	17	0289	6	0 167
9	25 89	54	2916	5	0 200
10	25 79	44	1936	4	0 250
11	24 53	82	6724	4	0 250
12	25 15	20	0400	3	0 333
13	25 22	13	0169	4	0 250
14	24 84	51	2601	4	0 250
15	25 36	01	0001	4	0 250
16	26 02	67	4489	4	0 250
17	25 42	07	0049	4	0 250
18	26 08	73	5329	4	0 250
19	25 72	37	1369	4	0 250
20	25 70	35	1225	4	0 250
21	25 93	58	3364	3	0 333

Mean $=$ 25 35 $[vv] =$ 12 0083 $\left[\frac{1}{n}\right] =$ 7 366

$$E_\phi^2 = 0.455 \times \frac{12.0083}{20} = 0.273 \qquad \varepsilon^2 = \frac{(0.30)^2 \times 7.366}{20} = 0.033$$

$$E_\delta^2 = 0.240 \qquad E_\delta = 0''.49$$

The result is the probable error of the quantity $\frac{1}{2}(\delta + \delta')$ That of a single declination is, therefore, $0''.49 \times \sqrt{2} = 0''.69$

If all the declinations had been taken from the same authority, the probable error thus found would have determined the weight of that authority, and could afterwards be used in assigning weights to different observations For this purpose, the probable errors of the different authorities have been determined from the numerous observations of the Coast Survey by discussions essentially the same as the above (of course, confining each discussion to stars taken from the same source), with the following results · ε_δ denoting the probable error of a single declination,

Authority	ε_δ	ε_δ^2
Groombridge alone	1''.5	2.25
B A C on authority of Bradley, Piazzi, and Taylor	1.0	1.00
The same with additional modern authority	0.85	0.72
Twelve Year (Gr) Catalogue, with less than six observations	0.6	0.36
Nautical Almanac, or Twelve Year Catalogue, with six or more observations	0.5	0.25

234 *Combination of the observations by weights* —Let ε_δ and $\varepsilon_{\delta'}$ denote the probable errors of the declinations of the stars of a pair on which there are n observations, then the probable error of $\frac{1}{2}(\delta + \delta')$ is

$$E_\delta = \tfrac{1}{2}\sqrt{(\varepsilon_\delta^2 + \varepsilon_{\delta'}^2)}$$

and that of the latitude is

$$E_\phi = \sqrt{E_\delta^2 + \frac{e^2}{n}}$$

The weight p of an observation is reciprocally proportional to E_ϕ^2, or, since the *scale* of weights is arbitrary, we may take

$$p = \frac{1}{4E_\phi^2}$$

$$= \frac{1}{\varepsilon_\delta^2 + \varepsilon_{\delta'}^2 + \frac{4e^2}{n}} \tag{243}$$

Adopting the Coast Survey value $e = 0''.50$, we have, therefore,

$$p = \frac{1}{\varepsilon_\delta^2 + \varepsilon_{\delta'}^2 + \frac{1}{n}} \tag{244}$$

By this formula, the weight *unity* would be assigned to a value of the latitude found by a *single observation* of a pair of stars when the declinations were perfectly exact, or to a value found by *two observations* on a pair of Nautical Almanac stars

The stars observed at Roslyn were really taken from various authorities, although, for the sake of illustration, we have discussed the probable error of their declinations as we should have done if but a single authority had been used Let us now find the final value of the latitude from all the observations, having regard to their weights as determined by this formula In the following table the values of ε_δ^2 are given according to the authorities from which their declinations are taken, as stated in the table at the end of the preceding article.

No of pair	ε_δ^2	$\varepsilon_{\delta'}^2$	n	p	ϕ	$p\phi$	$v = \phi \backsim \phi_0$	pvv
1	1 00	0 25	1	0 44	24″ 78	10″ 90	0″ 76	0 25
2	0 25	0 25	1	0 67	25 05	16 78	0 49	0 16
3	0 36	0 36	2	0 82	24 83	20 36	0 71	0 41
4	0 36	1 00	3	0 59	26 20	15 46	0 66	0 26
5	1 00	1 00	3	0 43	25 91	11 14	0 37	0 06
[6]*	1 00	1 00	2		[22 73]			
7	1 00	0 25	6	0 70	25 93	18 15	0 39	0 11
8	0 36	1 00	6	0 65	25 13	16 37	0 36	0 09
9	0 36	0 36	5	1 09	25 89	28 22	0 35	0 18
10	0 25	0 25	4	1 33	25 79	34 30	0 25	0 08
11	1 00	2 25	4	0 29	24 53	7 11	1 01	0 30
12	0 36	1 00	3	0 59	25 15	14 84	0 39	0 09
13	1 00	0 25	4	0 67	25 22	16 90	0 32	0 07
14	1 00	0 25	4	0 67	24 84	16 64	0 70	0 33
15	1 00	0 25	4	0 67	25 36	16 99	0 18	0 02
16	1 00	0 36	4	0 62	26 02	16 13	0 48	0 14
17	1 00	1 00	4	0 44	25 42	11 18	0 12	0 01
18	1 00	1 00	4	0 44	26 08	11 48	0 54	0 13
19	1 00	0 25	4	0 67	25 72	17 23	0 18	0 02
20	0 25	0 25	4	1 33	25 70	34 18	0 16	0 03
21	0 25	0 25	3	1 20	25 93	31 12	0 39	0 18
$m = 20$				$[p] = 14\ 81$		$[p\phi] = 365\ 47$		$[pvv] = 2\ 86$

$$\varphi_0 = \frac{[p\varphi]}{[p]} = 25''\ 54$$

$$E_{\phi_0} = 0\ 6745 \sqrt{\frac{[pvv]}{(m-1)[p]}} = 0''\ 07$$

* The result by the 6th pair of stars is rejected by *Peirce's Criterion* (see Appendix)

Hence, the final result from these observations is

$$\text{Lat of Roslyn} = 37° \ 14' \ 25''.54 \pm 0''.07$$

235 *To determine the value of a division of the level*.—It will generally be most convenient to find the value of the divisions of the level by the aid of the micrometer. It would seem, therefore, most natural to begin by determining the value of the micrometer screw, but it will be seen in the next article that in the investigation of the screw we must know the value of a division of the level *in parts of a revolution of the screw*. This value, then, we are here to find, and afterwards, when the micrometer value has been determined, we can convert it into arc.

Let the telescope be directed towards a well-defined terrestrial mark, or, which is better, to the cross-thread of a collimating telescope. Let the level be set to an extreme reading L. Bisect the mark by the micrometer, and let the reading be M. Now move the telescope and level together [by the tangent screw F, Plate XIII.] until the bubble gives a reading L' near the other extreme. Bisect the mark again by the micrometer, and let the reading be M'. Then the value d of a division of the level in terms of the micrometer will be

$$d = \frac{M - M'}{L' - L} \tag{245}$$

and if R is the value (in seconds of arc) of a revolution of the micrometer, we shall afterwards find the value D of a division of the level in seconds of arc, by the formula

$$D = Rd \tag{246}$$

Instead of a terrestrial mark we may use a circumpolar star at its culmination, for we can apply to each observation the reduction to the meridian (237), so that each will be referred to the fixed point in which the star culminates. In this method, however, we are exposed to errors arising from transient irregularities in the refraction, and also to any error arising from inclination of the micrometer thread. The latter error, however may be avoided by revolving the instrument in azimuth, so as to observe the star always in the middle of the field, and then we should use the reduction to the meridian for circummeridian altitudes (238).

EXAMPLE —The following are some of the observations for determining the value of a division of the level of a zenith telescope, taken by Mr G W DEAN, of the U S Coast Survey, at the Roslyn Station, Virginia, June 30, 1852, the telescope being directed upon a fixed terrestrial point

Temp	No of obs	Readings of			Difference		d	v	v^2
		Micr	Level		Micr	Level			
			N	S					
		div	div	div					
90°	1	1941	54 0	11 4					
		2106	11 2	53 9	165	42 65	3 869	0 176	0310
	2	2111	56 1	8 2					
		2296	10 5	54 0	185	45 70	4 048	003	0000
	3	2305	55 5	8 8					
		2506	5 2	59 0	201	50 25	4 000	045	0020
	4	2517	55 0	9 1					
		2704	8 8	55 2	187	46 15	4 052	007	0000
	5	2709	59 0	4 8					
		2915	9 0	54 7	206	49 95	4 124	079	0062
	6	2919	56 0	7 8					
		3115	9 2	54 4	196	46 70	4 197	152	0231
	7	1176	58 2	5 8					
		1390	5 5	58 5	214	52 70	4 061	016	0003
	8	1396	59 6	5 0					
		1617	4 5	60 1	221	55 10	4 011	034	0012
						Mean d =	4 045	Sum =	0638

The column of v gives the difference between each observed value of d and the mean From the sum of the squares of v we find the probable error of the mean to be

$$= 0\ 6745 \sqrt{\frac{0\ 0638}{8 \times 7}} = 0\ 023$$

The value of d is here expressed in divisions of the micrometer thread which represent hundredths of a revolution. Hence we have, in parts of a revolution R of the micrometer, the value of a division of the level,

$$D = 0\ 04045\ R \pm 0\ 00023\ R$$

From twenty-one observations of the same kind, the value found was

$$D = 0.03985\, R \pm 0.00013\, R$$

236 *To find the value of a revolution of the micrometer.*—The most convenient method with this instrument, as it avoids displacing the micrometer, is by transits of a circumpolar star near its eastern or western elongation (Art. 45). We first find the hour angle and zenith distance of the star at the elongation by the formulæ

$$\cos t_0 = \cot \delta \tan \varphi \qquad \cos z_0 = \operatorname{cosec} \delta \sin \varphi$$

and then, α being the star's right ascension, ΔT the correction of the chronometer, we find the chronometer time of the elongation by

$$T_0 = \alpha \pm t_0 - \Delta T \quad \left[\begin{array}{l} + \text{ western elong} \\ - \text{ eastern } \quad \text{"} \end{array}\right]$$

Set the telescope for the zenith distance z_0, direct it upon the star some 20^m or 30^m before the time of elongation, bringing the star near the middle vertical thread, and clamp the instrument. Set the micrometer thread at any reading a little in advance of the star, and note the transit by the chronometer. Then advance the thread to a new reading, and again observe the transit, and so on until the star has been observed through the whole field or through the whole range of the micrometer screw. The repeated manipulation of the screw may slightly disturb the direction of the telescope, but the only change which can affect the determination of R will be shown by the level, which, therefore, must also be frequently observed during the transits. Of course, the relation of the level to the telescope must not be changed during the observations. Now, z_0 denoting as above the zenith distance of the star at the time T_0, and M_0 the corresponding reading of the micrometer when the level reading is zero, z the zenith distance at the time T of an observed transit when the micrometer reading is M and the level reading is L, we have (neglecting for the present the refraction)

$$z = z_0 + (M_0 - M)R - LD$$

or, since we as yet know the value of a level division only in parts of R,

$$z = z_0 + (M_0 - M)\, R - L\, Rd$$

In like manner, for another observation,

whence

$$z' = z_0 + (M_0 - M') R - L' Rd$$

$$R = \frac{(z - z_0) - (z' - z_0)}{M' - M + (L' - L) d} \tag{247}$$

The quantity $z - z_0$ may be computed (as we have shown in Art. 45) by the formula

$$\sin (z - z_0) = \pm \sin (T - T_0) \cos \delta$$

where the lower sign is to be used for the eastern elongation; or

$$z - z_0 = \pm \sin (T - T_0) \frac{\cos \delta}{\sin 1''} \tag{248}$$

The value of R thus found is corrected for refraction by subtracting from it the quantity $R\Delta r$, in which $\Delta r =$ the change of refraction at the zenith distance z_0 for $1'$ of zenith distance, and R is expressed in minutes *

EXAMPLE —Observations of *Polaris* at its eastern elongation were taken June 30, 1852, at the Roslyn Station (Va) of the U S Coast Survey, to determine the value of the micrometer of the same zenith telescope as was used in the example of the preceding articles

To prepare for the observation, we have

$\varphi = 37° \; 14' \; 25''$

$\delta = 88° \; 30' \; 56''$ $\qquad \alpha = 1^h \; 5^m \; 36^s 8$

Hence, $z_0 = 52° \; 44' \; 42''$ $\qquad t = 5 \; 55 \; 29 \; 1$

Sid time of elongation	$= 19 \;\; 10 \;\; 7 \; 7$
Chronometer fast,	$24 \;\; 46 \; 8$
T_0	$= 19 \;\; 34 \;\; 54 \; 5$

The micrometer thread was set at every half revolution, and

* The values of both R and D might be found at the same time from these observations For by varying the level reading at the different observations (by means of the tangent screw F), we shall have from the observations, taken suitably in pairs, equations of condition of the form

$$z - z' = (M' - M) R + (L' - L) D$$

from which both R and D may be found In this method $z - z'$ must be the apparent difference of zenith distance affected by the differential refraction

59 transits were observed I extract only those taken on the even whole revolutions, to illustrate the method

Temp	No of obs	Micr M	Level N	Level S	L	T	$T-T_0$	$z-z_0$
		R	div	div	div			
77°	1	6	42 2	44 8	—1 30	19ʰ 11ᵐ 39ˢ 0	—23ᵐ 15ˢ 5	+541″ 33
	2	8	"	"	"	15 14 2	19 40 3	458 10
	3	10	"	"	"	18 46 8	16 7 7	375 73
	4	12	"	"	"	22 23 4	12 31 1	291 71
	5	14	42 5	44 2	—0 85	25 58 8	8 55 7	208 12
	6	16	"	"	"	29 29 4	5 25 1	126 30
	7	18	"	"	"	33 4 4	— 1 50 1	+ 42 77
	8	20	42 6	44 2	—0 80	36 36 4	+ 1 41 9	— 39 61
	9	22	"	"	"	40 11 6	5 17 1	123 20
	10	24	42 7	44 2	—0 75	43 43 3	8 48 8	205 43
	11	26	"	"	"	47 15 0	12 20 5	287 62
	12	28	41 9	45 1	—1 60	50 46 7	15 52 2	369 72
	13	30	"	"	"	54 19 3	19 24 8	452 08
76	14	32	"	"	"	57 52 8	22 58 3	534 70

We compare the 1st observation with the 8th, the 2d with the 9th, &c , and in each case we have $M' - M = 14$ Rev , or, taking $d = 0\ 04$, as found on p 359, we have for the 1st and 8th observation $(L' - L)d = +0\ 020$ revolutions of the micrometer, and hence, denoting the divisor in (247) by a, we obtain

$$a = M' - M + (L' - L)d = 14\ 020$$

Proceeding thus for each pair of transits, we have—

Obs	a	$z - z'$	R	v	v^2
1 and 8	14 020	580″ 94	41″ 436	+ 0″ 042	0 0018
2 " 9	14 020	581 30	462	+ 0 068	0046
3 " 10	14 022	581 16	446	+ 0 052	0027
4 " 11	14 022	579 33	316	— 0 078	0060
5 " 12	13 970	577 84	363	— 0 031	0010
6 " 13	13 970	578 38	402	+ 0 008	0001
7 " 14	13 970	577 47	336	— 0 058	0034
		Mean =	41 394	Sum =	0196

$$\text{Prob error} = \frac{2}{3}\sqrt{\frac{0196}{6 \times 7}} = 0''\ 014$$

The change of refraction for 1′ of zenith distance is, for z_0 = 52° 45′, Δr = 0″ 046, and hence the correction of the above mean is $- 0'' 046 \times \frac{41\ 4}{60} = - 0'' 032$ These observations, therefore, give us the result

$$R = 41'' 362 \pm 0'' 014$$

The final value, as found from all the observations on several nights, was

$$R = 41'' 400 \pm 0'' 011$$

and from this we find the value of a division of the level of this instrument to be

$$D = 1'' 65 \pm 0'' 005$$

which are the values employed above in reducing the observations for latitude at Roslyn

237 A more thorough method of treating the preceding observations is the following We have for each observed transit

$$z - z_0 = (M_0 - M) R - L Rd$$

where M_0 is the unknown reading corresponding to z_0. Let us assume an approximate value for M_0, denoting it by M_1, and put $M_0 = M_1 + x$ Also let R_1 be an assumed approximate value of R, and put $R = R_1 + y$ Then

$$z - z_0 = (M_1 - M + x)(R_1 + y) - L R_1 d$$

where, on account of the small values of L, we can use R_1 instead of R in the last term Then, neglecting the product xy as insensible when M_1 and R_1 are properly assumed, and putting

$$n = z - z_0 - (M_1 - M) R_1 + L R_1 d \tag{249}$$

we have from each observation the equation of condition

$$R_1 x + (M_1 - M) y = n \tag{250}$$

and from all these equations x and y can be found by the method of least squares

Thus, in the above example, if we assume $M_1 = 19.0$, $R_1 = 41''.4$,

which are easily seen from the observations to be near approximations, we have the following equations

$$\begin{array}{ll}
41\ 4x + 13y = +\ 0''\ 98 & 41\ 4x - y = +\ 0''\ 47 \\
41\ 4x + 11y = +\ 0\ \ 55 & 41\ 4x - 3y = -\ 0\ \ 32 \\
41\ 4x + 9y = +\ 0\ \ 98 & 41\ 4x - 5y = +\ 0\ \ 33 \\
41\ 4x + 7y = -\ 0\ \ 24 & 41\ 4x - 7y = +\ 0\ \ 94 \\
41\ 4x + 5y = -\ 0\ \ 29 & 41\ 4x - 9y = +\ 0\ \ 23 \\
41\ 4x + 3y = +\ 0\ \ 69 & 41\ 4x - 11y = +\ 0\ \ 67 \\
41\ 4x + y = -\ 0\ \ 04 & 41\ 4x - 13y = +\ 0\ \ 85
\end{array}$$

from which we form the normal equations

$$\begin{aligned}
23995\ 44\,x &= +\ 240\ 12 \\
910\,y &= -\ \ \ 1\ 72
\end{aligned}$$

whence

$$\begin{array}{ll}
x = +\ 0\ 01 & y = -\ 0\ 002 \\
M_0 = \ \ 19\ 01 & R = \ \ 41\ 398
\end{array}$$

If we substitute the values of x and y in the equations of condition, we shall find the sum of the squares of the residuals to be $= 2\ 956$, and hence the mean error of a single observation is

$$= \sqrt{\frac{2\ 956}{14 - 2}} = 0''\ 496$$

and consequently the probable error of y, the weight of which is its coefficient ($= 910$) in the final equation, will be

$$= \frac{2}{3}\ \frac{0''\ 496}{\sqrt{910}} = 0''\ 011$$

Applying to the above value of R the correction for refraction as before, we have the final result by this method,

$$R = 41''\ 366 \pm 0''011$$

The smaller probable error here found shows that the observations are better satisfied by the value of R found by the method of least squares

EXTRA-MERIDIAN OBSERVATIONS FOR LATITUDE WITH THE ZENITH TELESCOPE

238 It has been seen above that, although the probable error of observation with the zenith telescope is very small, the greater

probable error of the declinations employed, when the observations are restricted to the meridian, renders it necessary to greatly multiply the number of pairs of stars observed But if we are willing to observe one of the stars at some distance from the meridian, we can generally find a pair of fundamental stars, or stars from the most reliable catalogues, which can be observed at the same zenith distance within a sufficiently brief interval of time to exclude the probability of sensible changes in the state of the instrument, and by moderate attention to the determination of the time the probable error of observation will be very little increased, while the number of observations necessary to attain to the desired degree of precision will be greatly reduced It may not be superfluous, therefore, to deduce here the necessary formulæ for this purpose

Let δ and δ' be the declinations of two stars, the first of which is observed out of the meridian at the zenith distance z and hour angle t, and the second on the meridian at the zenith distance z', which is very nearly equal to z We have

$$\cos z = \cos(\varphi - \delta) - 2\cos\varphi\cos\delta\sin^2\tfrac{1}{2}t$$
$$z' = \varphi - \delta'$$

The second equation gives

$$z = \varphi - \delta' + z - z'$$

which, substituted in the first equation, gives

$$\sin\left[\varphi - \tfrac{1}{2}(\delta + \delta') - \tfrac{1}{2}(z' - z)\right]\sin\tfrac{1}{2}(\delta - \delta' + z - z') = \cos\varphi\cos\delta\sin^2\tfrac{1}{2}t$$

Putting then

$$\sin\gamma = \frac{\cos\varphi\cos\delta\sin^2\tfrac{1}{2}t}{\sin\tfrac{1}{2}(\delta - \delta' + z - z')} \tag{251}$$

we shall have

$$\varphi = \tfrac{1}{2}(\delta + \delta') + \tfrac{1}{2}(z' - z) + \gamma \tag{252}$$

The quantity $z' - z$ will be given by the micrometer and level, precisely as in the case of meridian observations. The value of φ will always be known with sufficient accuracy for the computation of γ

The effect of an error in t upon γ, and consequently upon φ, may be computed by the formula

$$\Delta\gamma = (15\,\Delta t)\,\frac{\tan\gamma}{\sin\tfrac{1}{2}t}$$

To prepare for the observation, put $\zeta = \varphi_1 - \delta'$, (or $\delta' - \varphi_1$), φ_1 being an assumed approximate value of φ, and set the instrument at the zenith distance ζ for the observation of both stars The hour angle at which the star out of the meridian is to be observed will be found by the formula

$$\sin \tfrac{1}{2} t = \sqrt{\left(\frac{\sin \frac{1}{2}(\zeta + \varphi_1 - \delta) \sin \frac{1}{2}(\zeta - \varphi_1 + \delta)}{\cos \varphi \cos \delta}\right)}$$

or rather,

$$\sin \tfrac{1}{2} t = \sqrt{\left(\frac{\sin [\frac{1}{2}(\delta' + \delta) - \varphi_1] \sin \frac{1}{2}(\delta' - \delta)}{\cos \varphi \cos \delta}\right)}$$

Then the sidereal time of the observation of this star may be either $\alpha + t$ or $\alpha - t$, α being the right ascension, and it may often be convenient to observe the star at each of these times

It will probably be most expedient to observe one of the stars in the meridian, but, if both are observed out of the meridian, we can find the latitude by the method of Vol I Art 186

239 The zenith telescope may be used with advantage in measuring any small difference of zenith distance Its application in finding the longitude from equal zenith distances of the moon's limb and a neighboring star is given in Vol I Art 245 The correction of the method there given for a small difference of the zenith distances of the moon and star, as found by the micrometer, is obvious

240 We may determine both time and latitude with the zenith telescope, by observing a number of stars at the same altitude, and combining them by the method of least squares See Vol I Art 189

ADAPTATION OF THE PORTABLE TRANSIT INSTRUMENT AS A ZENITH TELESCOPE

241 Prof C S Lyman, of Yale College, has shown* that the transit instrument may be successfully used as a substitute for the zenith telescope in the application of Talcott's method of finding the latitude by meridian observations Indeed, it is evident that, if the level usually attached to the finding circle is made of the same delicacy as that applied to zenith telescopes, and a micrometer is added to the telescope, that method may be carried out precisely in the same manner as with the zenith telescope

* Am Journal of Science and Arts, Vol XXX p 52

The different method of reversing the instrument by lifting it from its Vs instead of revolving directly about a vertical axis, does not in any way affect the principle, the essential condition of TALCOTT's method being always observed, namely, that the relation of the level and the telescope is to be absolutely the same at the observations of both stars of the pair.

CHAPTER IX.

THE EQUATORIAL TELESCOPE.

242 THE equatorial telescope is mounted with two axes of motion at right angles to each other, one of which is parallel to the axis of the earth Of the various modes which have been employed for mounting the instrument according to these conditions, that which is now universally adopted is the one contrived by FRAUNHOFER and known by his name

Plate XIV * is a representation of the great FRAUNHOFER equatorial of the Pulkowa Observatory, constructed by MERZ and MAHLER. The lens has a clear aperture of 15 inches, with a focal length of 22 55 feet The pier P is of stone (in smaller instruments a wooden stand is frequently used, resting on three feet) The upper face of the pier makes an angle with the horizon equal to the latitude of the place, secured to this face is a metallic bed, which supports at two points the *polar* or *hour axis* H of the instrument This axis, being in the plane of the meridian, and making an angle with the horizon equal to the latitude of the place, is parallel to the earth's axis, and, consesequently, is directed towards the poles of the heavens Permanently attached to the hour axis, and at right angles to it, is a metallic tube, DD, in which the *declination axis* revolves The telescope is firmly attached to one extremity of this declination axis, and at right angles to it, the point of the tube at which it is attached being somewhat nearer to the eye end than to the object end

* Reduced from the drawing in the *Description de l'observatoire central* of STRUVE

It is evident that as the instrument revolves upon the hour axis the declination axis remains in the plane of the celestial equator, and, consequently, the telescope, as it revolves upon the declination axis, always describes secondaries to the celestial equator, or declination circles The declination of the point of the heavens towards which the telescope is at any time directed may, therefore, be indicated by the graduated *declination circle* $\delta\delta$, which is read by two opposite verniers The hour angle of this point is at the same time shown by the graduated *hour circle* t, which is also read by two opposite verniers

The great advantage of this mode of mounting the telescope is that we can follow a star in its diurnal motion by revolving the instrument upon the hour axis alone, the declination circle being clamped at the reading corresponding to the star's declination Further, the star's motion being uniform, we can cause the instrument to follow it automatically by means of a clock f, which, by a train, turns an endless screw acting upon the circumference of the hour circle The observer is thus left free either to make a careful examination of the physical appearance of the objects in the field, or to measure their relative positions with the micrometer m of the telescope

It is important that all the parts of the instrument be so counterpoised that the telescope will be in equilibrium in all positions, and possess the greatest freedom of movement upon either axis This is effected in the FRAUNHOFER arrangement in the most perfect manner The equilibrium of the telescope with respect to the hour axis is produced by the counterpoises W, W, X, and Y, of which W, W are fixed cylindrical masses, but Y is adjustable, so that the equilibrium may be finally regulated with the utmost nicety The weights X (of which there are two, one on each side of the declination axis) are attached to the extremities of levers whose fulcrums are at x The opposite extremities of the levers seize upon a circular collar at K, in which there are four friction rollers The weights X thus not only contribute to the equilibrium, but also reduce the friction of the declination axis The centre of gravity of the telescope tube is not in the prolongation of the declination axis, but nearer to the object glass, its equilibrium with respect to the declination axis is produced by counterpoises a (one on each side of the tube) at the end of levers abc Each of these levers consists of two conical tubes attached to a cube at b, which moves upon two axes, and

their extremities *c* seize upon a collar around the tube The extremity *a*, at which the weight is placed, is free, and the weight can be adjusted by sliding upon the lever In consequence of the double axis of each lever at *b*, the counterpoises act in all positions of the telescope, and not only balance the tube, but prevent in a degree the flexure of the object end which would result from its weight, increased as it is by the great weight of the object glass itself The centre of gravity of the telescope and all its counterpoises is now in the hour axis at a point a little above its upper journal, the result is a downward pressure upon this journal, and an upward pressure upon the lower journal The weight *ω* at one extremity of a bent lever reduces the friction upon the upper journal by producing an opposite pressure at *e* at right angles to the axis, two friction rollers upon the extremity *e* being thus pressed against the axis The remaining small upward pressure of the inferior extremity of the axis is reduced by a spring which presses two friction rollers against the axis at *g*

The weight of the Pulkowa telescope (including all the parts which move, namely, the axes and tube with its counterpoises) is very nearly 7000 pounds; and yet, with this admirable system of counterpoises, it moves upon either axis with almost as much ease as a small portable instrument Without this perfect equilibrium and reduced friction, it would have been very difficult to produce a regular automatic movement of the instrument by the driving clock As this clock is required to produce a *continuous* regular movement, it is not regulated by an oscillating pendulum, but by the friction of centrifugal balls against the interior of a conical box *d* The rate of movement is regulated by raising or depressing the pivot of this conical pendulum, which, in consequence of the conical form of the box, changes the degree of friction of the balls against its interior surface The rate may thus be adapted not only to the motion of a fixed star, but to that of the moon, or sun, or any planet, all of which have different rates of motion In our own country, BOND'S *Spring Governor* has been successfully applied to produce the equable motion of equatorial telescopes

A *finder F* is attached to the principal telescope (Art 16)

The field of the telescope is illuminated by a lamp *q*, the light of which is reflected towards the reticule by a small mirror within the tube The direct illumination of the threads, which

is required when very faint objects are to be observed, is effected by two small lamps suspended at n and n'. (See Transit Instrument, p 134)

The micrometer is provided with a position circle (Art 49)

243 Any point of the heavens may be observed with the equatorial instrument in two different positions of its declination axis For example, if the declination axis is at right angles to the plane of the meridian,—that is, horizontal,—the telescope will describe the plane of the meridian. and this, whether the *circle end* of the declination axis is east or west, and, in general, the same declination circle of the heavens may be described by the telescope with this circle end of the axis on either side These two positions are to be distinguished in the use of the instrument Let us suppose the declination axis to be produced through the *circle end* to the celestial sphere The point in which it meets the sphere may be called the *pole* of the declination circle If the hour angle of this pole is 90° greater than the hour angle of a star observed in the telescope, the circle is said to *precede* the telescope, if the hour angle of this pole is 90° less than that of the star, the circle is said to *follow* the telescope Thus, for a star on the meridian (at its upper culmination) the circle *precedes* when it is *west* and *follows* when it is *east* of the meridian

GENERAL THEORY OF THE EQUATORIAL INSTRUMENT

244. Let us first consider the instrument in the most general manner, that is, without supposing its hour axis to be even approximately adjusted to the pole of the heavens That point of the celestial sphere towards which the hour axis is actually directed will be called the *pole of the instrument*, or the pole of its hour axis, and that point in which the declination axis produced on the side of the declination circle meets the sphere will be called the pole of this axis or circle

The instrument is designed to give, by means of its two circles, the hour angle and declination of a star observed in the sight line of the telescope. If the sight line were perpendicular to the declination axis, and if this axis were perpendicular to the hour axis, the readings of the circles would give at once (by merely correcting them for any index error) the hour angle and

declination *referred to the meridian and pole of the instrument.* The deviations from perpendicularity being always very small in a well constructed instrument, approximate formulæ will fully suffice to reduce given readings to the proper values referred to the pole of the instrument But an equatorial instrument may sometimes be used in a place for which it was not intended, and, having no adjustment by which the angle which its hour axis makes with the horizon can be greatly changed, the pole of the instrument may be so far from the celestial pole that the reduction of the hour angles and declinations from their *instrumental* to their *true* values (referred to the celestial pole) will require the use of rigorous formulæ In order to provide for such a case, I shall first consider the method of deducing the instrumental quantities by approximate but sufficiently exact formulæ, then give the rigorous formulæ for reducing these to the celestial pole, and finally give the approximate formulæ, most frequently required, for the case in which the deviation of the hour axis from the celestial pole is very small As some *flexure* of the declination axis and of the telescope is always to be expected in an instrument of this kind, I shall include its effect in the formulæ

245 *To find the instrumental declination and hour angle of an observed point* —Let the figure be a projection of the celestial sphere upon the plane of the *equator of the instrument,* P' its pole, Z the zenith of the observer then $P'Z$ may be called the *meridian of the instrument*

Fig 52

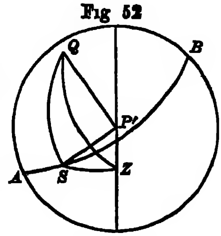

Let Q be the pole of the declination axis of the instrument While the instrument revolves upon the hour axis, the point Q will describe a circle of which P' is the pole, and which would be a great circle if the axes were at right angles to each other, in which case we should have $P'Q = 90°$ But we shall assume that there is a deviation from this condition, and suppose the arc $P'Q$ to be $= 90° - \imath$ · so that $\imath$ will express the declination of the point Q referred to the equator of the instrument

Let us next suppose the declination axis to remain fixed while the telescope revolves upon this axis and its sight line is brought upon a star S As the telescope revolves, the sight line (which we may here suppose to be determined by a simple cross thread)

describes a circle in the heavens of which Q is the pole, and which will be a great circle if this sight line is perpendicular to the declination axis, and a small circle, ASB, in any other case Let us suppose the polar distance of this small circle, or QS, to be $90° - c$ so that c will denote the collimation constant of a given thread

The revolution of the instrument upon the hour axis is measured by the hour circle When Q is 90° west of the meridian, the telescope should be in the meridian, and the reading of the hour circle, consequently, zero, but let us suppose the reading is then $-x$ When Q is in the meridian and above the pole, the reading will be $-x - 90°$ If, then, for the actual position when the star is observed at S the reading is t, we have the angle $ZP'Q = t + x + 90°$

Let the instrumental hour angle $ZP'S = t'$ Then we have the angle $SP'Q = ZP'Q - ZP'S = t + x - t' + 90°$; and since, from the construction of the instrument, this angle differs very little from 90°, the quantity $t + x - t'$ will be very small.

As the telescope revolves upon the declination axis and its sight line describes the circle ASB, the reading of the declination circle will vary directly with the angle $P'QS$, since Q is the pole of this circle If we denote the reading of the declination circle when the arc QS coincides with QP' by $90° - \Delta d$, and the actual reading for the star at S by d, we shall have the angle $P'QS = 90° - \Delta d - d$, provided the readings increase with the star's declination, as we here suppose

Finally, let the instrumental declination be d', that is, let $P'S = 90° - d'$

We have then in the triangle $QP'S$ the given parts

$$P'Q = 90° - i \qquad QS = 90° - c$$
$$P'QS = 90° - (d + \Delta d)$$

and in order to determine t' and d' we are to find

$$SP'Q = 90° - (t' - t - x)$$
$$P'S = 90° - d'$$

From this triangle we obtain the general equations

$$\sin d' = \sin i \sin c + \cos i \cos c \sin (d + \Delta d)$$
$$\cos d' \sin (t' - t - x) = \cos i \sin c - \sin i \cos c \sin (d + \Delta d)$$
$$\cos d' \cos (t' - t - x) = \cos c \cos (d + \Delta d)$$

But, as i and c are supposed to be so small that their squares and products are insensible, these equations give

$$\sin d' = \sin (d + \Delta d)$$
$$\cos d' = \cos (d + \Delta d)$$
$$(t' - t - x) \cos d' = c - i \sin (d + \Delta d)$$

whence

$$\left.\begin{aligned} d' &= d + \Delta d \\ t' &= t + x + c \sec d' - i \tan d' \end{aligned}\right\} \quad (253)$$

246 *Flexure*.—The flexure of the hour axis may be supposed to be altogether insensible, since the centre of gravity of the whole instrument falls very near to the upper journal of this axis, and the pressure at this point is relieved by a counterpoise

The flexure of the declination axis, being assumed to result solely from the weight, changes the zenith distance of the point Q Denoting the zenith distance of Q by ζ and the increased zenith distance by $\zeta + d\zeta$, we shall assume the flexure to be proportional to $\sin \zeta$ (Art 204), and, therefore, put

$$d\zeta = \varepsilon \sin \zeta$$

in which ε is the maximum of flexure of the declination axis corresponding to $\zeta = 90°$

The flexure of the telescope changes the zenith distance ZS, so that, putting $ZS = \zeta'$, we can express this flexure by

$$d\zeta' = e \sin \zeta'$$

in which e is the maximum of flexure of the tube corresponding to $\zeta' = 90°$

The flexure of the declination axis changes the arc $P'Q = 90° - i$, and the angle $ZP'Q = t + x + 90°$, but these changes (the flexure being supposed extremely small) evidently produce no sensible effect upon the declination d' The flexure of the telescope, however, changes the arc $P'S = 90° - d'$, and thus also d' Treating the changes as differentials, we have

$$d \cdot P'S = d\,(90° - d') = d\zeta' \cos P'SZ$$

If we denote the zenith distance of P' by $90° - \varphi_1$ (or let φ_1 be the observer's latitude referred to the equator of the instrument), the triangle $P'SZ$ gives

$$\cos P'SZ = \frac{\sin \varphi_1 \cos d' - \cos \varphi_1 \sin d' \cos t'}{\sin \zeta'}$$

and hence

$$dd' = -e(\sin\varphi_1 \cos d' - \cos\varphi_1 \sin d' \cos t') \qquad (m)$$

Again, we have

$$d\ P'Q = d(90° - \imath) = d\zeta \cos P'QZ$$

$$d\ ZP'Q = dt = d\zeta \frac{\sin P'QZ}{\sin P'Q}$$

in which we may put $\sin P'Q = \cos\imath = 1$. Substituting also the values

$$\cos P'QZ = \frac{\sin\varphi_1 - \sin\imath \cos\zeta}{\cos\imath \sin\zeta}$$

$$\sin P'QZ = \frac{\cos(t+x)\cos\varphi_1}{\sin\zeta}$$

and neglecting the product of $d\zeta$ and $\imath$ as insensible, we find

$$\left.\begin{aligned} d\imath &= -\varepsilon \sin\varphi_1 \\ dt &= \varepsilon \cos\varphi_1 \cos(t+x) \end{aligned}\right\} \qquad (n)$$

Finally, the flexure of the telescope changes the arc $QS = 90° - c$, and we have

$$d\ QS = d(90° - c) = d\zeta' \cos ZSQ$$

in which

$$\cos ZSQ = \frac{\cos\zeta - \sin c \cos\zeta'}{\cos c \sin\zeta'}$$

Neglecting terms of the second order, therefore,

$$dc = -e\cos\zeta$$

in which we have

$$\cos\zeta = \sin\imath \sin\varphi_1 - \cos\imath \cos\varphi_1 \sin(t+x)$$

and in this we may put t' for $t + x$ Hence, again neglecting terms of the second order,

$$dc = e\cos\varphi_1 \sin t' \qquad (p)$$

By the formulæ for t' (253), we have

$$dt' = dt + dc \sec d' - d\imath \tan d'$$

and hence, by (n) and (p),

$$dt' = \varepsilon(\sin\varphi_1 \tan d' + \cos\varphi_1 \cos t') + e\cos\varphi_1 \sec d' \sin t' \qquad (q)$$

Hence, applying the corrections (m) and (q) to d' and t' (253), the complete formulæ, including the effect of flexure, are*

$$\left.\begin{aligned} d' &= d + \Delta d - e\,(\sin\varphi_1 \cos d' - \cos\varphi_1 \sin d' \cos t') \\ t' &= t + x + c \sec d' - i \tan d' \\ &\quad + \varepsilon\,(\sin\varphi_1 \tan d' + \cos\varphi_1 \cos t') + e \cos\varphi_1 \sec d' \sin t' \end{aligned}\right\} \quad (254)$$

247 *To reduce the instrumental declination and hour angle* (d', t') *to the celestial declination and hour angle* (δ, τ) —Let PZ be the true meridian, P the celestial pole, P' the pole of the instrument, S the observed star Let γ and ϑ denote the polar distance and hour angle of P', that is, let

Fig 53

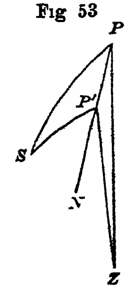

$$\gamma = PP' \qquad \vartheta = ZPP'$$

and, producing PP', let

$$\vartheta' = ZP'N = 180° - ZP'P$$

The instrument gives, by the aid of (254), the values of $d' = 90° - P'S$, $t' = ZP'S$, and we are to find $\delta = 90° - PS$ and $\tau = ZPS$ The triangle $PP'S$, in which $PP'S = 180° - (t' - \vartheta')$ and $P'PS = \tau - \vartheta$, gives

$$\left.\begin{aligned} \sin\delta &= \cos\gamma \sin d' - \sin\gamma \cos d' \cos(t' - \vartheta') \\ \cos\delta \cos(\tau - \vartheta) &= \sin\gamma \sin d' + \cos\gamma \cos d' \cos(t' - \vartheta') \\ \cos\delta \sin(\tau - \vartheta) &= \cos d' \sin(t' - \vartheta') \end{aligned}\right\} \quad (255)$$

which will determine δ and τ from d' and t' when the instrumental constants γ, ϑ, and ϑ' are known

Putting $90° - \varphi = PZ$, the relation between φ_1, ϑ', φ, ϑ, and γ is found from the triangle $PP'Z$, which gives

$$\left.\begin{aligned} \sin\varphi_1 &= \cos\gamma \sin\varphi + \sin\gamma \cos\varphi \cos\vartheta \\ \cos\varphi_1 \cos\vartheta' &= -\sin\gamma \sin\varphi + \cos\gamma \cos\varphi \cos\vartheta \\ \cos\varphi_1 \sin\vartheta' &= \cos\varphi \sin\vartheta \end{aligned}\right\} \quad (256)$$

248 In the preceding discussion I have not distinguished between the case in which the declination circle *precedes* and that in which it *follows* the telescope (Art 243) The formulæ, nevertheless, will apply to either case, provided we reckon declinations over 90° when they require it. By Fig. 52, in which for a star at S the declination circle *precedes*, we see that when

* These formulæ are essentially the same as BESSEL's See his *Astron Untersuchungen*, Vol I p 7

the telescope is revolved from S towards B and passes beyond the pole, we shall have declinations exceeding 90° if we wish to employ the same formulæ as have been found for this position, but for these points beyond the pole the declination circle *follows* the telescope The declination in that case, reckoned in the usual manner, will be $180° - d'$, and the hour angle will be $180° + t'$ We may, therefore, employ these formulæ in their present form in all cases, but when d' falls between 90° and 270° we must finally take $180° - d'$ and $180° + t'$ as the proper instrumental declination and hour angle (See also Transit Instrument, Art 128)

If, however, we wish to distinguish the cases in the formulæ themselves, we shall have, *when the circle precedes*, the readings of the circle being d_1 and t_1,

$$\left.\begin{aligned} d' &= d_1 + \Delta d - e(\sin\varphi_1\cos d' - \cos\varphi_1\sin d'\cos t') \\ t' &= t_1 + x + c\sec d' - i\tan d' \\ &\quad + \varepsilon(\sin\varphi_1\tan d' + \cos\varphi_1\cos t') + e\cos\varphi_1\sec d'\sin t' \\ &\text{and \textit{when the circle follows}, the readings being } d_2 \text{ and } t_2, \\ 180° - d' &= d_2 + \Delta d + e(\sin\varphi_1\cos d' - \cos\varphi_1\sin d'\cos t') \\ 180° + t' &= t_2 + x - c\sec d' + i\tan d' \\ &\quad - \varepsilon(\sin\varphi_1\tan d' + \cos\varphi_1\cos t') + e\cos\varphi_1\sec d'\sin t' \end{aligned}\right\} \quad (257)$$

249 The rigorous formulæ (255) and (256) will be required only in the rare case in which the pole of the instrument is at a considerable distance from the celestial pole, but I will briefly indicate the methods of determining the instrumental constants for this case It will always be possible to bring the hour axis of the instrument very nearly into the meridian of the place of observation, whatever may be the elevation of its pole above the horizon, so that the meridian of the instrument and the true meridian will nearly coincide

If we observe a *fixed point* in both positions of the instrument, circle preceding and circle following, we shall have by (257), taking the sums of the respective equations,

$$180° = d_1 + d_2 + 2\Delta d$$
$$180° + 2t' = t_1 + t_2 + 2x + 2e\cos\varphi_1\sec d'\sin t'$$

the first of which determines the index correction (Δd) of the declination circle, and the second determines the value of $t' - x$,

if we have independently found the flexure ϵ, or if the fixed point is in the meridian of the instrument and consequently $t' = 0$

Taking the differences of the same equations, the observation of the fixed point also gives

$$180° - 2d' = d_2 - d_1 + 2\epsilon(\sin\varphi_1 \cos d' - \cos\varphi_1 \sin d' \cos t')$$
$$180° = t_2 - t_1 - 2c\sec d' + 2i\tan d' - 2\epsilon(\sin\varphi_1 \tan d' + \cos\varphi_1 \cos t')$$

The first of these determines d' when ϵ is otherwise known, and, the value of d' thus found being substituted in the second, we have an equation of condition for determining c, i, and ϵ The observation of at least three different points will be necessary in order to determine these quantities, or of at least two points if we neglect ϵ

Upon the supposition that the pole of the instrument is very near the meridian, but at a considerable distance from the celestial pole, γ is a large arc, but ϑ is small, and we have from the first of the equations (256), by putting $\cos\vartheta = \pm 1$,

$$\varphi_1 = \varphi \pm \gamma$$

and the value of γ may be found from the observation of a star in the meridian and as far from the pole of the instrument as possible, since in this case we shall have very nearly

$$\pm\gamma = \delta - d'$$

in which d' will be known from two observations of the star in the two positions of the instrument

When γ has been thus approximately found, let a star be observed on the six hour circle both west and east of the meridian We deduce from (255)

$$\sin d' = \sin\delta\cos\gamma + \cos\delta\sin\gamma\cos(\tau - \vartheta)$$

Denoting the instrumental declination for the two observations by d_1' and d_2', and putting $\tau = 90°$ for the first observation, and $\tau = 270°$ for the second, we have

$$\sin d_1' = \sin\delta\cos\gamma + \cos\delta\sin\gamma\sin\vartheta$$
$$\sin d_2' = \sin\delta\cos\gamma - \cos\delta\sin\gamma\sin\vartheta$$

whence

$$\sin\vartheta = \frac{\sin d_1' - \sin d_2'}{2\cos\delta\sin\gamma}$$

This will give a sufficient approximation to ϑ, provided the star is not very near the pole

A theoretically rigorous determination of both γ and ϑ would be found by observing two points whose declinations (δ_1, δ_2) and hour angles (τ_1, τ_2) are known, and then solving the equations

$$\sin d_1' = \sin \delta_1 \cos \gamma + \cos \delta_1 \sin \gamma \cos (\tau_1 - \vartheta)$$
$$\sin d_2' = \sin \delta_2 \cos \gamma + \cos \delta_2 \sin \gamma \cos (\tau_2 - \vartheta)$$

When γ and ϑ have been found, we have, from the observation of one known point,

$$\cos d' \cos (t' - \vartheta') = \sin \delta \sin \gamma + \cos \delta \cos \gamma \cos (\tau - \vartheta)$$
$$\cos d' \sin (t' - \vartheta') = \cos \delta \sin (\tau - \vartheta)$$

which determine $t' - \vartheta'$, and, since ϑ' will be known from (256), t' will also be known. Finally, the instrument gives the value of $t' - x$, as we have shown above, and thus x becomes known

250 *When the pole of the instrument is very near the celestial pole,* γ is very small, but ϑ may have any value from 0° to 360°. Putting $\cos \gamma = 1$ in (256), and neglecting terms of the same order as γ^2, we find

$$\varphi_1 = \varphi + \gamma \cos \vartheta$$
$$\vartheta - \vartheta' = -\gamma \sin \vartheta \tan \varphi$$

and (255) gives

$$\delta = d' - \gamma \cos (t' - \vartheta')$$
$$\tau = t' + \vartheta - \vartheta' - \gamma \sin (t' - \vartheta') \sin d' \sec \delta$$

or, within terms of the second order,

$$\delta = d' - \gamma \cos (\tau - \vartheta)$$
$$\tau = t' - \gamma \sin \vartheta \tan \varphi - \gamma \sin (\tau - \vartheta) \tan \delta$$

Substituting the values of d' and t' from (254), and putting $\Delta t = x - \gamma \sin \vartheta \tan \varphi$, which is constant, we have

$$\left.\begin{aligned} \delta &= d + \Delta d - \gamma \cos (\tau - \vartheta) - e (\sin \varphi \cos \delta - \cos \varphi \sin \delta \cos \tau) \\ \tau &= t + \Delta t - \gamma \sin (\tau - \vartheta) \tan \delta + c \sec \delta - i \tan \delta \\ &\quad + \varepsilon (\sin \varphi \tan \delta + \cos \varphi \cos \tau) + e \cos \varphi \sec \delta \sin \tau \end{aligned}\right\} \quad (258)$$

which are the formulæ usually required in practice Here δ is to be reckoned beyond 90° when necessary, being then the supplement of the star's declination (Art 248), and then τ is the star's hour angle increased by 180°

The declination and hour angle are here *apparent*, that is, affected by refraction, &c If we wish δ and τ to represent the

geocentric position of the observed point, we may apply the corrections for refraction, &c to d and t

If we prefer to distinguish the cases in the formulæ themselves, we shall have—

$$\left.\begin{array}{l}
\textit{For circle preceding} \\
\delta = d + \Delta d - \gamma \cos(\tau - \vartheta) - e(\sin\varphi\cos\delta - \cos\varphi\sin\delta\cos\tau) \\
\tau = t + \Delta t - \gamma\sin(\tau - \vartheta)\tan\delta + c\sec\delta - i\tan\delta \\
\qquad + \varepsilon(\sin\varphi\tan\delta + \cos\varphi\cos\tau) + e\cos\varphi\sec\delta\sin\tau \\
\\
\textit{For circle following} \\
180^\circ - \delta = d + \Delta d + \gamma\cos(\tau - \vartheta) + e(\sin\varphi\cos\delta - \cos\varphi\sin\delta\cos\tau) \\
180^\circ + \tau = t + \Delta t - \gamma\sin(\tau - \vartheta)\tan\delta - c\sec\delta + i\tan\delta \\
\qquad - \varepsilon(\sin\varphi\tan\delta + \cos\varphi\cos\tau) + e\cos\varphi\sec\delta\sin\tau
\end{array}\right\} \quad (259)$$

in which δ and τ will always denote the declination and hour angle of the star reckoned in the usual manner

ADJUSTMENT OF THE EQUATORIAL INSTRUMENT

251 The adjustment of the instrument with respect to the pole of the heavens consists of two operations 1st, bringing the hour axis into the plane of the meridian, and, 2d, giving this axis an elevation, with respect to the horizon, equal to the latitude of the place

For a rough preliminary adjustment, place the declination axis in a horizontal position, and move the stand until the telescope points to a star at the computed time of its meridian passage The hour axis is then nearly in the plane of the meridian Then bring the declination axis into the plane of the meridian (by revolving the instrument upon the hour axis through 90° by the hour circle), and direct the telescope upon a circumpolar star on the six hour circle The elevation of the axis should be changed so as to make the star appear near the optical axis at the computed time when the star's hour angle is equal to 6^h

For the final adjustment, the outstanding deviations of the instrument must be found by properly combined observations of stars, taken in the two reverse positions of the declination axis, by the methods given hereafter

The position of the pole of the instrument with respect to the pole of the heavens may be expressed by the two quantities

$$\xi = \gamma\cos\vartheta \qquad \eta = \gamma\sin\vartheta \qquad (260)$$

which are the distances of the pole of the instrument from the

hour circle and from the meridian, respectively According our definitions of γ and ϑ, a *positive* value of ξ will indicate that e instrumental pole is above the true pole, and a positive value η will indicate that the pole of the instrument is west of the eridian I proceed to consider the methods of finding these antities, as well as the other instrumental constants

252 *To find* ξ —The most simple method is to observe the clinations of known stars at their culmination in both positions the declination axis, and to compare the instrumental values, rrected for refraction, with the true declinations found from e best catalogues or ephemerides By the instrumental values shall hereafter understand the values inferred directly from e readings (d) of the circle

As the two observations in reverse positions of the declination is cannot both be absolutely in the meridian (unless observans on different days are combined), one of them is taken a v seconds before the meridian passage, and the other a few conds after it In consequence of the great facility with which en the largest equatorial instrument can be reversed, the erval between the two observations will be so small that the ean of the two values of $\cos(\tau - \vartheta)$ will be sensibly the same $\cos \vartheta$, τ being a very small quantity with opposite signs for e two observations Hence, we shall have for each pair of servations on a star, by putting $\tau = 0$ in (259),

$$\delta = d_1 + \Delta d - \xi - e \sin(\varphi - \delta)$$
$$180° - \delta = d_2 + \Delta d + \xi + e \sin(\varphi - \delta)$$

iere d_1 and d_2 are the circle readings in the two positions The lf sum of these equations gives the index correction of the clination circle,

$$\Delta d = 90° - \tfrac{1}{2}(d_1 + d_2)$$

eir half difference gives

$$\xi + e \sin(\varphi - \delta) = 90° - \tfrac{1}{2}(d_2 - d_1) - \delta$$

If we put

$$D = 90° - \tfrac{1}{2}(d_2 - d_1)$$

will be the mean of the instrumental values of the declination, inferred from the two readings, whatever may be the mode in ich the circle is graduated A number of stars being thus served, we shall have the equations of condition

$$\xi + e \sin(\varphi - \delta\ ) = D - \delta$$
$$\xi + e \sin(\varphi - \delta') = D' - \delta'$$
$$\xi + e \sin(\varphi - \delta'') = D'' - \delta''$$
$$\&c \qquad\qquad \&c$$

which, treated by the method of least squares, will give both ξ and e

EXAMPLE —The declinations of ten stars were observed by OTTO STRUVE with the equatorial telescope of the Pulkowa Observatory, 1840, June 22, according to the preceding method, and the values of D, corrected for refraction, were as in the following table The values of δ for the stars 1, 4, 5 and 8 were taken from the *Nautical Almanac*, for 2, 3, and 7 from ARGELANDER'S *Catalogue*, and for 6 and 9 from AIRY'S *Catalogue* for the year 1840 The latitude employed in computing the coefficient of e is $\varphi = 59° \ 46' \ 3$. The degrees and minutes of δ, omitted to save room, are the same as those of D In order to apply the same formula to the stars observed below the pole, we have only to employ the supplements of their declinations instead of the declinations, that is, to reckon them *over the pole* (Art. 128)

Stars	Instr dec $= D$	δ	Equations	v
1 μ *Sagittarii*	$-$ 21° 5′ 55″ 5	40″ 6	$-14''\,9 = \xi + 0\,99e$	$-\ 5''\,4$
2 η *Serpentis*	$-$ 2 56 23 8	3 4	$-20\ \ 4 = \xi + 0\,89e$	$-7\ .7$
3 ϑ *Serpentis*	$+$ 3 59 47 1	59 5	$-12\ \ 4 = \xi + 0\,83e$	$+2\ \ 2$
4 ζ *Aquilæ*	13 37 34 6	48 3	$-13\ \ 7 = \xi + 0\,72e$	$+4\ .4$
5 α *Lyræ*	38 37 47 1	70 4	$-23\ \ 3 = \xi + 0\,36e$	$+6\ .2$
6 κ *Cygni*	53 3 55 5	83 6	$-28\ \ 1 = \xi + 0\,12e$	$+9\ \ 0$
7 δ *Draconis*	67 21 51 6	99 7	$-48\ \ 1 = \xi - 0\,13e$	$-3\ \ 1$
8 δ *Ursæ Min*	86 34 22 6	81 2	$-58\ \ 6 = \xi - 0\,45e$	$-3\ \ 4$
9 2 *Lyncis, s p*	120 55 12 0	79 9	$-67\ \ 9 = \xi - 0\,88e$	$+0\ \ 9$
10 ξ *Aurigæ, s p*	124 19 4 5	76 9	$-72\ \ 4 = \xi - 0\,90e$	$-3\ \ 0$

The solution of these 10 equations gives

$$\xi = -\,40''\,9 \text{ with the probable error } = 1''\,2$$
$$e = +\,31''\,7 \quad \text{“} \quad \text{“} \quad \text{“} \quad \text{“} \quad = 1''\,8$$

The last column gives the residuals v after the substitution of these values in the 10 equations From these residuals we find

the probable error of a single equation to be $3''.9$, which is composed of the error of observation and the error in the star's declination This degree of accuracy in the determination of absolute declinations, with an equatorial instrument of such dimensions, is surprising, and is a striking proof of the perfection of its workmanship At the same time we perceive that very crude determinations will be obtained if we neglect the flexure.

253 *To find* η —This will be found by comparing the instrumental hour angles of different stars, near the meridian, with the observed clock times of their transits over a given thread We shall, at the same time, find the instrumental constants i and c, and the index correction of the hour circle

We shall suppose the thread on which the stars are to be observed to be placed in the direction of a circle of declination,—that is, as a transit thread,—and to be in the optical axis of the telescope. This optical axis may be defined to be the line drawn through the optical centre of the objective, and the centre of the position circle of the micrometer: consequently, when the thread is revolved 180° by this circle, it should still pass through the optical axis As the thread may not be precisely adjusted in this respect, the error is to be eliminated by combining two observations taken in these two positions of the thread Two such pairs of observations are to be taken on each star, one pair with circle preceding, and one with circle following A second star, in a widely different declination, being observed in the same manner, we shall have all that is required for the determination of our constants If we observe a greater number of stars, we can treat the observations by the method of least squares

Supposing two stars to be observed, one near the pole and the other near the equator, the observations should be symmetrically arranged according to the following schedule, in which the position I denotes circle preceding, and II circle following, and the letters a and b refer to the two positions of the transit thread for the two readings of the position circle differing by 180°. We should endeavor to make the mean of the times of the four observations on a star coincide very nearly with the instant of its meridian passage.

Star	Position		Clock	Means	Hour circle	Means
1st Star	I	a	$(T_1)_a$	$\} = T_1$	$(t_1)_a$	$\} = t_1$
		b	$(T_1)_b$		$(t_1)_b$	
R A $= \alpha$	II	b	$(T_2)_b$	$\} = T_2$	$(t_2)_b$	$\} = t_2$
Decl $= \delta$		a	$(T_2)_a$		$(t_2)_a$	
			Mean $=$	T_0	Mean $=$	t_0
2d Star	II	a	$(T_2')_a$	$\} = T_2'$	$(t_2')_a$	$\} = t_2'$
		b	$(T_2')_b$		$(t_2')_b$	
R A $= \alpha'$	I	b	$(T_1')_b$	$\} = T_1'$	$(t_1')_b$	$\} = t_1'$
Decl $= \delta'$		a	$(T_1')_a$		$(t_1')_a$	
			Mean $=$	T_0'	Mean $=$	t_0'

The observations being very near the meridian, the flexure of the telescope (e) has no sensible effect That term of the flexure (ε) of the declination axis which is multiplied by tan δ may become sensible for stars near the pole, but, as it will always be combined with ι, it will be convenient to put

$$\iota_1 = \iota - \varepsilon \sin \varphi \tag{261}$$

The term $\varepsilon \cos \varphi \cos t$, which is always less than ε, will be practically unimportant, and will here be neglected A method of determining ε will, however, be given hereafter.

With this notation we find, by putting $\tau = 0$ in the second member of (259), for the observation at the clock time T_1,

$$\tau_1 = t_1 + \Delta t + \eta \tan \delta + c \sec \delta - \iota_1 \tan \delta$$

and if ΔT is the clock correction, we have also

$$\tau_1 = T_1 + \Delta T - \alpha$$

Hence, by putting

$$\lambda = \Delta t - \Delta T$$

we deduce

$$\eta \tan \delta + c \sec \delta - \iota_1 \tan \delta = T_1 - t_1 - \alpha - \lambda$$

In the same manner the observation at the clock time T_2 gives

$$\eta \tan \delta - c \sec \delta + \iota_1 \tan \delta = T_2 - t_2 - \alpha - \lambda$$

and from these two equations, with the notation of the above schedule,

$$\eta \tan \delta = T_0 - t_0 - \alpha - \lambda$$
$$c \sec \delta - i_1 \tan \delta = \tfrac{1}{2}[(T_1 - t_1) - (T_2 - t_2)]$$

The second star gives, in the same manner,

$$\eta \tan \delta' = T_0' - t_0' - \alpha' - \lambda$$
$$c \sec \delta' - i_1 \tan \delta' = \tfrac{1}{2}[(T_1' - t_1') - (T_2' - t_2')]$$

By combining the two equations in η, we have, therefore, the following three equations

$$\left.\begin{aligned} \eta\,(\tan \delta - \tan \delta') &= (T_0 - T_0') - (t_0 - t_0') - (\alpha - \alpha') \\ c \sec \delta - i_1 \tan \delta &= \tfrac{1}{2}[(t_2 - t_1) - (T_2 - T_1)] \\ c \sec \delta' - i_1 \tan \delta' &= \tfrac{1}{2}[(t_2' - t_1') - (T_2' - T_1')] \end{aligned}\right\} \qquad (262)$$

which determine η, i_1, and c from the observed clock times and the readings of the hour circle

We can then find the value of λ by the formula

$$\lambda = T_0 - t_0 - \alpha - \eta \tan \delta = T_0' - t_0' - \alpha' - \eta \tan \delta' \qquad (263)$$

and finally, if the clock correction is otherwise known, the index correction of the hour circle, by the formula

$$\Delta t = \Delta T + \lambda \qquad (264)$$

Example —The following observations were taken, according to the above method, with the equatorial of the Pulkowa Observatory, on June 3, 1840

			Clock times		Hour circle	
δ *Ursæ Min*	I	*a*	$18^h\,21^m\,56^s\,5$	$T_1 = 18^h\,22^m\,41^s\,2$	$23^h\,58^m\,21^s\,1$	$t_1 = 23^h\,58^m\,59^s\,5$
		b	23 25 8		59 37 9	
	II	*b*	27 6 0	$T_2 = 18\ 28\ 22\ 4$	0 2 55 0	$t_2 = 0\ 4\ 6\ 4$
		a	29 38 8		5 17 7	
				$T_0 = 18\ 25\ 31\ 8$		$t_0 = 0\ 1\ 33\ 0$
α *Lyræ*	II	*a*	34 10 0	$T_2' = 18^h\,35^m\,2^s\,7$	0 2 56 7	$t_2' = 0^h\,3^m\,49^s\,6$
		b	35 55 4		4 42 5	
	I	*b*	39 33 1	$T_1' = 18\ 40\ 29\ 0$	8 23 4	$t_1' = 0\ 9\ 19\ 4$
		a	41 24 9		10 15 4	
				$T_0' = 18\ 37\ 45\ 9$		$t_0' = 0\ 6\ 34\ 5$

The places of the stars, according to the Nautical Almanac, were—

δ *Ursæ Min*	$\alpha = 18^h\,24^m\,5^s\,8$	$\delta = 86^\circ\,35'\,2$
α *Lyræ*	$\alpha' = 18\ 31\ 34\ 0$	$\delta' = 38\ 38\ 1$

Hence our equations (262) become

$$\begin{aligned} 15.97\,\eta &= +15^s.6 \\ 16.80\,c - 16.77\,i_1 &= -17.2 \\ 1.28\,c - 0.80\,i_1 &= -1.75 \end{aligned}$$

whence

$$\eta = +0^s.98 = +14''.7$$
$$i_1 = -0^s.92 \qquad c = -1^s.94$$

The values of i_1 and c are here not separately so well determined as they would be if the second star were nearer to the equator. Their difference, however, $i_1 - c = +1^s.02$, is accurately determined by the first star. We next find, by (263),

$$\lambda = -23^s.4$$

and if the clock correction is $\Delta T = +20^s.0$, the index correction of the hour circle is, by (264),

$$\Delta t = -3^s.4$$

To give the reader some idea of the stability of a large equatorial properly mounted, I will here give the values of ξ and η, together with the coefficient of flexure of the tube (e), determined by the above methods, for the Pulkowa instrument during a year. They are taken from STRUVE'S *Description de l' Observatoire Central*, p. 204, only changing the signs of ξ and η to agree with the preceding notation.

	ξ	e
1840, May 15	$-41''.2$	$+32''.6$
June 3	-46.4	$+21.7$
" 22	-40.9	$+31.7$
July 3	-54.3	$+19.0$
" 24	-48.3	$+34.2$
Aug 9	-43.0	$+36.2$
Sept 24	-43.2	$+21.7$
" 26	-53.0	$+37.2$
Nov 10	-38.5	$+35.4$
Dec 26	-44.1	$+29.3$
1841, Mar 15	-43.5	$+25.5$
Means	-45.1	$+29.5$

	η
1840, April 17	$+18''.9$
" 28	$+14.8$
June 3	$+14.7$
July 24	$+10.2$
Sept 24	$+10.8$
Nov 3	$+4.4$
Dec 26	$+11.4$
1841, Mar 15	$+15.2$
Mean	$+12.5$

The temperature during this period varied from $-22°$ to $+86°$ Fahr. The constancy of the coefficient of flexure for the extremes of temperature is as remarkable as the stability of the axis.

254. By the preceding method of finding η we also find the constants i_1 and c, but we can find η independently of these constants by observing the declinations of stars on the six hour circle. When $\tau = \pm 6^h$, we have, by (259),

$$\delta = D \mp \eta - e \sin \varphi \cos \delta$$

where D is the mean instrumental declination from the observed readings in the two positions of the instrument (the two observations being taken in quick succession very near the six hour circle, and one on each side of it). If we put $p = D - \delta$, we shall have the equation of condition

$$\pm \eta + e \sin \varphi \cos \delta = p \tag{265}$$

and from a number of equations of this kind the values of η and e will be found.

If the same star is observed both at $\tau = +6^h$ and $\tau = -6^h$, we shall have, for the two observations,

$$\eta + e \sin \varphi \cos \delta = p_1$$
$$-\eta + e \sin \varphi \cos \delta = p_2$$
$$\eta = \tfrac{1}{2}(p_1 - p_2) \tag{266}$$

in which $p_1 - p_2$ will be the difference of the observed instrumental declinations, corrected for any difference of refraction that may result from changes in the meteorological instruments in the interval between the observations.

But it is not always possible to observe stars on the six hour circle in both positions of the instrument, the pier or stand interfering with one of the positions for stars within a certain distance of the pole. We must then find D from a single observation by applying the index correction, previously found from meridian observations by Art. 252. The equations formed from such an observation should have a weight of only one-half in combining the equations according to the method of least squares.

255. Both ξ and η can be found in a general manner from observations upon different stars, without limiting the obser-

vations to the meridian or the six hour circle If each observation of a star is *complete*,—that is, consists of the mean of two observations in the two positions of the declination axis,—we shall have for this mean

$$\begin{aligned} \delta &= D - \gamma \cos(\tau - \vartheta) - Be \\ \tau &= t + \Delta t - \gamma \sin(\tau - \vartheta) \tan \delta + B'e \end{aligned}$$

in which B and B' are the coefficients of e in (259) Developing $\sin(\tau - \vartheta)$ and $\cos(\tau - \vartheta)$, we find

$$\left.\begin{aligned} \xi \cos \tau \qquad + \eta \sin \tau \qquad + Be &= D - \delta \\ \Delta t - \xi \sin \tau \tan \delta + \eta \cos \tau \tan \delta + B'e &= \tau - t \end{aligned}\right\} \qquad (267)$$

and, from a sufficient number of such equations, Δt, ξ, η, and e will be determined

256 Again, ξ and η may be found from *single* observations,—that is, observations in but one of the positions of the declination axis,—by observing each star twice at very different hour angles We shall have for two observations of the same star at the hour angles τ_1 and τ_2, circle preceding in both observations or following in both,

$$\begin{aligned} \tau_1 &= t_1 + \Delta t - \xi \sin \tau_1 \tan \delta + \eta \cos \tau_1 \tan \delta \pm c \sec \delta \mp i \tan \delta \pm A_1 \varepsilon + B_1 e \\ \tau_2 &= t_2 + \Delta t - \xi \sin \tau_2 \tan \delta + \eta \cos \tau_2 \tan \delta \pm c \sec \delta \mp i \tan \delta \pm A_2 \varepsilon + B_2 e \end{aligned}$$

where the signification of A and B is apparent from (259) The difference of these equations gives

$$\begin{aligned} -\xi(\sin\tau_2 - \sin\tau_1)\tan\delta + \eta(\cos\tau_2 - \cos\tau_1)\tan\delta \pm (A_2 - A_1)\varepsilon + (B_2 - B_1)e = \\ \tau_2 - \tau_1 - (t_2 - t_1) = 2q \end{aligned}$$

Now, suppose one series of observations in which each star is observed at equal or very nearly equal distances from the meridian, east and west this equation will then be reduced to the form

$$-\xi \sin \tau \tan \delta + e \cos \varphi \sec \delta \sin \tau = q \qquad (268)$$

and from the whole series, embracing stars of very different declinations, ξ and e will be determined

Suppose another series in which each star is observed at or very near to its upper and lower culminations the equation will take the form

$$-\eta \tan \delta \mp \varepsilon \cos \varphi = q \qquad (269)$$

This series will, therefore, determine η and ε. The upper sign will here be used for a series in which the circle is west of the meridian at the upper culminations and east of the meridian at the lower culminations This appears to be the most simple and satisfactory method of finding the flexure ε of the declination axis Another method will be given in the next article

257 All the preceding methods of determining the instrumental constants depend upon the accuracy of the graduations of the two circles of the instrument Let us inquire how far it is possible to determine these constants independently of the circles, or without involving their errors *

First—The inclination $90° - c$ of the telescope to the declination axis can be separately determined, independently of the other constants, as follows Bring the telescope into a horizontal position in the plane of the meridian, the declination axis being then also horizontal Place two collimating telescopes in the prolongation of the optical axis, one north and one south, and, directing them towards each other, bring the cross threads in their foci into optical coincidence (the equatorial telescope being for this purpose temporarily moved out of the line joining the collimators by revolving it about the hour axis) Then, bringing the telescope upon one of the collimators, and clamping the hour circle, measure with the micrometer the distance between the fixed thread that marks the optical axis and the cross thread of the collimator Revolve the telescope upon the declination axis, and measure the distance between its optical axis and the cross thread of the other collimator The difference of the two micrometer measures is the value of $2c$ To eliminate any eccentricity of the fixed thread with respect to the optical axis, let each observation on a collimator be the mean of two taken in reverse positions of the thread corresponding to readings of the position circle differing 180° This method is identical in principle with the process given for the transit instrument, and more fully explained in Art 145 Instead of one of the collimators, a distant terrestrial point may be used

We may, at the same time, determine the flexure e of the telescope, with the aid of the declination circle, but without involving its errors of division (Art. 204)

* See BESSEL's *Astronom Untersuch*, Vol I p 14

Second—An equation for determining the inclination, $90° - i$, of the declination and hour axes, can be obtained from the observation of the transits of two different stars in the same fixed position of the declination axis, that is, with the hour circle clamped at any assumed reading If τ and τ' are the apparent hour angles of the stars, and T, T' the sidereal clock times of the transits (corrected for clock *rate*), the difference $2q$ of these hour angles will be known by the formula

$$2q = \tau' - \tau = T' - T - (\alpha' - \alpha) - (r' - r)$$

where r and r' are the corrections of τ and τ' for refraction, and, as the difference is very small, we may use τ for τ' in the second member of (259) hence, if the circle precedes, we shall find for this difference the expression

$$\begin{aligned} 2q = &- [\gamma \sin (\tau - \vartheta) + i - \varepsilon \sin \varphi] (\tan \delta' - \tan \delta) \\ &+ (c + e \cos \varphi \sin \tau) (\sec \delta' - \sec \delta) \end{aligned}$$

Now reverse the declination axis, setting the hour circle at a reading differing 12^h from the former reading, and repeat the observation on the same stars on the following day. We shall then have, in the same manner,

$$\begin{aligned} 2q' = &- [\gamma \sin (\tau - \vartheta) - i + \varepsilon \sin \varphi] (\tan \delta' - \tan \delta) \\ &- (c - e \cos \varphi \sin \tau) (\sec \delta' - \sec \delta) \end{aligned}$$

The half difference of these equations is

$$q' - q = (i - \varepsilon \sin \varphi) (\tan \delta' - \tan \delta) - c (\sec \delta' - \sec \delta) \quad (270)$$

from which, c being previously known, we find the value of $i - \varepsilon \sin \varphi$ The hour circle is here used only to set the instrument approximately in the reverse position, and so that the values of τ in the second members of all the equations may be regarded as equal to each other in the computation of the small terms. We thus find the combination $i - \varepsilon \sin \varphi$ independently of the circle reading, but we cannot separate i without such reading

Third—The quantities ξ and η may be found independently of the reading of the circles by observing the same star at its upper and lower culminations, and also at its east and west transits over the six hour circle, without revolving the telescope upon the declination axis, and measuring the distance of the star in declination from the sight line with the micrometer Thus,

r $\tau = 0$ and $\tau = 180°$, the reading of the declination circle ing constant, and f_1 and f_2 the micrometer distances of the ar from the sight line in the two observations, r_1 and r_2 the fractions, and δ the *true* declination, we have

$$\delta - r_1 = d + \Delta d + f_1 - \xi - e(\sin\varphi\cos\delta - \cos\varphi\sin\delta)$$
$$\delta + r_2 = d + \Delta d + f_2 + \xi - e(\sin\varphi\cos\delta + \cos\varphi\sin\delta)$$

nd the difference of these equations gives

$$\xi = \tfrac{1}{2}(f_1 - f_2) + \tfrac{1}{2}(r_1 + r_2) + e\cos\varphi\sin\delta \qquad (271)$$

For $\tau = 90°$ and $\tau = 270°$, we have

$$\delta + r_1 = d + \Delta d + f_1 - \eta - e\sin\varphi\cos\delta$$
$$\delta + r_2 = d + \Delta d + f_2 + \eta - e\sin\varphi\cos\delta$$

which r_1 and r_2 will be equal if no change in the meteoro- gical instruments has occurred The difference of these equa- ons gives

$$\eta = \tfrac{1}{2}(f_1 - f_2) - \tfrac{1}{2}(r_1 - r_2) \qquad (272)$$

258 A precise determination of the constants would be re- uired if the instrument were to be used for determining abso- ute hour angles and declinations But so large an instrument s liable to be so much affected by its own weight and by changes f temperature that we could not rely upon the constancy of ts condition for the intervals of time that must necessarily lapse between the determinations of its errors and its applica- ion to the observation of absolute positions of stars Hence its chief application is to the measurement of small *differences* of ight ascension and declination, or of distance and position angle of two stars with its micrometer The advantages of the equa- orial system of mounting for this application are obvious

The methods of conducting these micrometer observations are discussed in the next chapter.

CHAPTER X

MICROMETRIC OBSERVATIONS

I SHALL confine myself to those micrometers which have been most generally approved by astronomers, either for their convenience or their accuracy, and which are more or less in common use at the present day

THE FILAR MICROMETER

259 This has already been fully described in Chapter II, where also the methods of finding the angular value of a revolution of the screw have been given Those applications in which this micrometer is but an *auxiliary* of some principal instrument—as in the transit instrument, meridian circle, &c —have already been treated of under their appropriate heads We are here to consider it as the principal instrument, and the telescope as the auxiliary consequently, we are to suppose the telescope to be mounted with special reference to the convenience of micrometric observations, or, in short, to be an equatorial telescope We also suppose it to be furnished with a position circle, constituting it a *position micrometer* (Art 49).

TO FIND THE DISTANCE AND POSITION ANGLE OF TWO STARS* WITH THE FILAR MICROMETER

260 With the equatorial mounting, the telescope can be readily directed to the stars at any time by setting the circles to the known hour angle and declination of the middle point between the stars Moreover, the automatic movement of this instrument (by the driving clock), by means of which the stars

* I say "stars," in general, for brevity, but the methods given are obviously applicable to the measurement of the distance and position angle of any two near points, as the cusps in a solar eclipse, or to the measurement of apparent semi-diameters, &c

are kept in a constant position in the field, is indispensable for the exact measurement of their distance and position angle

The micrometer is to be revolved until its transverse thread, which is parallel to the screw, passes through the two stars The zero of the position circle (*i e* the reading when the transverse thread is in the direction of a circle of declination) being known $= P_0$, and P being the reading upon the stars, we have at once the required position angle p, by the formula

$$p = P - P_0 \tag{273}$$

The distance of the stars is measured at the same time, by placing the fixed micrometer thread (which is perpendicular to the transverse thread) upon one of the stars, and the movable thread upon the other The reading of the micrometer now being M (revolutions), and its zero for coincidence of the threads being M_0, the required distance in revolutions of the micrometer is

$$m = M - M_0 \tag{274}$$

If R is the value of a revolution in seconds of arc (Arts 42, 43, &c), and $s =$ the observed distance in arc, we then have

$$\tan \tfrac{1}{2} s = m \tan R, \qquad \text{or, nearly,} \qquad s = mR \tag{275}$$

The distance m may also be found by placing the same thread successively upon the stars and taking the difference of the micrometer readings, thus dispensing with the fixed thread and with the determination of M_0 It will be still better to use two movable threads whose constant distance is known, as will be illustrated in Art 265

In this process, we should bring the images of the stars on opposite sides of the middle of the field, and at very nearly equal distances from it The position angle measured is then the angle between the arc joining the stars and the circle of declination drawn to the middle point between the stars Both the distance and position angle thus observed are *apparent*, the effect of refraction will be considered hereafter

261 *Correction of the observed position angle for the errors of the equatorial instrument* —The preceding process would be complete if the zero of the position circle always corresponded to that position of the transverse thread in which it coincided with a

circle of declination The adjustment described in Art. 49—namely, placing the micrometer thread so that an equatorial star in the meridian runs along the thread—assumes, 1st, that the micrometer thread is perpendicular to the transverse thread, and, 2d, that the equatorial instrument is in perfect adjustment in all respects, so that the transverse thread, once adjusted to the meridian, will remain in the direction of a circle of declination in all other positions of the telescope

The first source of error is avoided by adjusting the transverse thread independently of the micrometer threads This will be most readily done by directing the telescope upon a distant terrestrial point, and revolving the micrometer until a motion of the telescope upon the declination axis alone causes the point to move exactly along the thread The thread then represents a declination circle of the instrument, or rather a circle whose pole is that of the declination axis, and we take the reading P_0 in this position as the zero of the position circle

The second source of error is next to be removed by *computation*, based upon the actual state of the instrument The distance of the stars is correctly obtained independently of the errors of the equatorial adjustment, and we therefore have only to investigate the effect of these errors upon the position angle The adjustment of the thread by the method just described causes the thread to be at right angles to the arc QS, Fig. 54, which joins the pole of the declination axis and the star If P is the celestial pole and λ is the required correction of the observed position angle, we have the angle $QSP = 90° - \lambda$ Let P' be the pole of the instrument, and put

Fig 54.

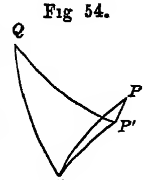

$$QSP' = 90° - Q, \qquad PSP' = q$$

we shall then have

$$\lambda = q + Q$$

The triangle QSP' gives, with the notation of Art. 245,

$$\sin Q = \frac{\sin i - \sin c \sin d'}{\cos c \cos d'}$$

or, with sufficient precision,

$$Q = i \sec \delta - c \tan \delta$$

To take the flexure of the declination axis and telescope into account, we see, by Art 246, that we must increase i by the correction $di = -\varepsilon \sin\varphi$, and c by the correction $dc = e\cos\varphi \sin\tau$. Hence, putting, as in Art 253,

$$i_1 = i - \varepsilon \sin\varphi$$

we have

$$Q = i_1 \sec\delta - c\tan\delta - e\cos\varphi\tan\delta\sin\tau$$

The triangle PSP', with the notation of Arts 245 and 247, gives

$$\sin q = \frac{\sin\gamma \sin(\tau - \vartheta)}{\cos d'}$$

or, with sufficient precision,

$$q = \gamma \sin(\tau - \vartheta)\sec\delta$$

and it is evident that the flexure produces no sensible effect upon this angle We have, therefore,

$$\lambda = \gamma\sin(\tau - \vartheta)\sec\delta + i_1\sec\delta - c\tan\delta - e\cos\varphi\tan\delta\sin\tau \quad (276)$$

This formula can be used for either position of the declination axis by observing the precepts of Art 248, but if we wish to let δ always represent the actual declination, and regard (276) as applicable to the case in which the declination circle precedes, we shall have, for the case in which it *follows*,

$$\lambda = \gamma\sin(\tau - \vartheta)\sec\delta - i_1\sec\delta + c\tan\delta - e\cos\varphi\tan\delta\sin\tau \quad (276^*)$$

The value of δ must be that which belongs to the middle of the field, or the mean of the apparent declinations of the two stars.

The position angle resulting from the observation will now be

$$p = P - P_0 + \lambda \quad (277)$$

262. The constant c expresses the angle between the optical axis and the axis of collimation, and it may be well to repeat here the definitions of these terms as we have used them The optical axis is the straight line drawn through the optical centre of the objective and the centre of the position circle, and the axis of collimation, the straight line drawn through the optical centre of the objective perpendicular to the declination axis Now, the transverse thread may not pass through the optical

axis, but may have a certain *eccentricity* hence, to obtain the position angle according to the above formula with the utmost rigor, we must take the mean of two observations in reversed positions of the thread, corresponding to readings of the position circle differing 180°

The correction λ, if the equatorial adjustment is good, will seldom amount to one minute of arc, and may usually be disregarded The importance of a correct determination of the position angle increases with the distance of the stars, since an error in this angle will produce errors in the deduced relative right ascension and declination of the stars which are directly proportional to this distance at the same time, the greater distance is favorable to accuracy in the *observation* of the position angle The field of the filar micrometer, however, is small, diminishing as we increase the magnifying power for the sake of increased accuracy, and, since for this observation both stars must be seen in the field at once, we are obliged to use low powers for the greater distances (from 10′ to 20′), and thus lose, in a degree, the advantage which the increased distance would otherwise afford This difficulty does not exist in the use of the *heliometer*, for which, therefore, a greater degree of refinement in the deduction of the position angle is requisite, and the above correction becomes of greater importance

263 *Reduction of the observed position angle to the mean of the position angles at the two stars* —Let S and S', Fig 55, be the stars, P the celestial pole, S_0 the middle point between the stars, and let the arc SS' be produced through the star S' towards A. Let

Fig. 55.

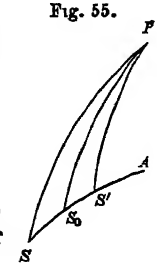

$$p' = PSA, \qquad p'' = PS'A, \qquad p = PS_0A$$

It is usual to assume p to be the mean of p' and p'', but for large distances, and when the stars are near the pole, a correction becomes necessary If we put

$$\delta, \delta', \delta_0 = \text{the declinations of } S, S', S_0,$$
$$s = \text{the distance } SS',$$

the triangle PS_0S gives

$$\cos\delta \cos p' = \cos\tfrac{1}{2}s \cos\delta_0 \cos p + \sin\tfrac{1}{2}s \sin\delta_0$$
$$\cos\delta \sin p' = \cos\delta_0 \sin p$$

whence

$$\cos\delta \sin(p' - p) = -\sin\tfrac{1}{2}s \sin\delta_0 \sin p + \sin^2\tfrac{1}{4}s \cos\delta_0 \sin 2p$$
$$\cos\delta \cos(p' - p) = \cos\delta_0 + \sin\tfrac{1}{2}s \sin\delta_0 \cos p - 2\sin^2\tfrac{1}{4}s \cos\delta_0 \cos^2 p$$

and, developing $\sin\frac{1}{2}s$ and $\sin\frac{1}{4}s$ in series,

$$\cos\delta \sin(p' - p) = -\tfrac{1}{2}s \sin\delta_0 \sin p + \tfrac{1}{16}s^2 \cos\delta_0 \sin 2p + \&c$$
$$\cos\delta \cos(p' - p) = \cos\delta_0 + \tfrac{1}{2}s \sin\delta_0 \cos p - \&c$$

Dividing the first by the second, and putting for $\tan(p' - p)$ its value in series, we find

$$p' - p = -\tfrac{1}{2}s \tan\delta_0 \sin p + \tfrac{1}{16}s^2 \sin 2p\,(1 + 2\tan^2\delta_0) - As^3 + \&c$$

In like manner, the triangle PS_0S' gives

$$\cos\delta' \cos p'' = \cos\tfrac{1}{2}s \cos\delta_0 \cos p - \sin\tfrac{1}{2}s \sin\delta_0$$
$$\cos\delta' \sin p'' = \cos\delta_0 \sin p$$

from which we see that the development of $p'' - p$ will be obtained from that of $p' - p$ by merely changing the sign of s· hence

$$p'' - p = +\tfrac{1}{2}s \tan\delta_0 \sin p + \tfrac{1}{16}s^2 \sin 2p\,(1 + 2\tan^2\delta_0) + As^3 + \&c$$

Neglecting only the 4th and higher powers of s, we have, therefore,

$$\tfrac{1}{2}(p' + p'') - p = \tfrac{1}{16}s^2 \sin 2p\,(1 + 2\tan^2\delta_0) \qquad (278)$$

which is the required correction to be added to the observed position angle p to reduce it to the mean $\frac{1}{2}(p' + p'')$ When s is expressed in seconds of arc, the second member must be multiplied by $\sin 1''$.

We also find, within terms of the 3d order,

$$\tfrac{1}{2}(p'' - p') = \tfrac{1}{2}s \tan\delta_0 \sin p \qquad (279)$$

The purpose of the observation is usually to determine the place of one star from that of another which is given It will be convenient hereafter to consider the observed position angle as expressing the position of the unknown star referred to the known. thus, in the above formulæ the three position angles p', p'', p are all reckoned in the direction from the known to the unknown star, p' being the angle at the former, p'' the angle at the latter, and p the angle at the middle point between the two stars.

TO FIND THE APPARENT DIFFERENCE OF RIGHT ASCENSION AND DECLINATION OF TWO STARS WITH THE FILAR MICROMETER

264 First Method —Observe the distance s, and the position angle p, of the unknown star from the known star, by the preceding method For a rigorous method of computation we must first reduce the observed angle to the mean of the angles at the stars, by (278) Thus, if we denote this mean by p_0, we first find

$$p_0 = p + \tfrac{1}{16} s^2 \sin 1'' \sin 2p \, (1 + 2 \tan^2 \delta_0) \qquad (280)$$

in which we may take δ_0 = the mean of the declinations of the stars, which may be found with sufficient precision by a rough preliminary computation If we also put $\Delta p = \frac{1}{2}(p'' - p')$, we find in the next place, by (279),

$$\Delta p = \tfrac{1}{2} s \tan \delta_0 \sin p \qquad (281)$$

Now, α, δ denoting the right ascension and declination of the known star, α', δ' those of the unknown star, the triangle formed by the two stars and the pole gives, by the Gaussian equations of Spherical Trigonometry,

$$\begin{aligned}
\sin \tfrac{1}{2}(\delta' - \delta) \cos \tfrac{1}{2}(\alpha' - \alpha) &= \sin \tfrac{1}{2} s \cos p_0 \\
\cos \tfrac{1}{2}(\delta' - \delta) \cos \tfrac{1}{2}(\alpha' - \alpha) &= \cos \tfrac{1}{2} s \cos \Delta p \\
\sin \tfrac{1}{2}(\delta' + \delta) \sin \tfrac{1}{2}(\alpha' - \alpha) &= \cos \tfrac{1}{2} s \sin \Delta p \\
\cos \tfrac{1}{2}(\delta' + \delta) \sin \tfrac{1}{2}(\alpha' - \alpha) &= \sin \tfrac{1}{2} s \sin p_0
\end{aligned}$$

The 1st and 2d give

$$\tan \tfrac{1}{2}(\delta' - \delta) = \tan \tfrac{1}{2} s \, \frac{\cos p_0}{\cos \Delta p} \qquad (282)$$

Having thus found $\frac{1}{2}(\delta' - \delta)$, we also have $\frac{1}{2}(\delta' + \delta) = \delta + \frac{1}{2}(\delta' - \delta)$, and then the 4th equation gives

$$\sin \tfrac{1}{2}(\alpha' - \alpha) = \frac{\sin \tfrac{1}{2} s \sin p_0}{\cos \tfrac{1}{2}(\delta' + \delta)} \qquad (283)$$

For an approximate method of computation, sufficient in most cases, we can neglect the difference between p and p_0, and, consequently, also neglect terms in s^3 in (282) and (283), so that these equations will become

$$\left.\begin{aligned}
\delta' - \delta &= s \cos p \\
\alpha' - \alpha &= s \sin p \sec \tfrac{1}{2}(\delta' + \delta)
\end{aligned}\right\} \qquad (284)$$

EXAMPLE —In 1846, November 29, at the Washington Observ-
tory, Mr SEARS C WALKER observed the position angle and
stance of the planet Neptune from a star as follows

Sid time $= 0^h\ 17^m\ 52^s$ $\qquad P = 82^\circ\ 35'\ 7$ $\qquad m = 20\ 576$ rev

For the zero of the position circle he found $P_0 = 272^\circ\ 38'$,
id the value of a revolution of the micrometer was $R = 15''.406$.
ne star's apparent place was

$$\alpha = 21^h\ 51^m\ 50^s\ 69 \qquad \delta = -\ 13^\circ\ 25'\ 52''\ 76$$

ence we have, by (284),

$-P_0 = p = 169^\circ\ 57'\ 7$	$\log\cos p$ $n9\ 99330$	$\log\sin p$	$9\ 24132$
	$\log mR = \log s$ $\quad 2\ 50105$	$\log s$	$2\ 50105$
$-\ \delta = -\ 5'\ 12''\ 14$	$\log(\delta' - \delta)$ $n2\ 49435$	$\log\sec\frac{1}{2}(\delta' + \delta)$	$0\ 01212$
$\delta' + \delta) = -13^\circ\ 28'\ 29''$	$\alpha' - \alpha = +56''\ 82 = +3^s\ 79$	$\log(\alpha' - \alpha)$	$1\ 75449$

he computation by the rigorous formulæ (282) and (283) gives
e same results Neglecting the differential refraction, which
ill be treated of hereafter, these differences applied to the
ven place of the star give for the place of Neptune at the
dereal time $0^h\ 17^m\ 52^s$,

$$\alpha' = 21^h\ 51^m\ 54^s\ 48 \qquad \delta' = -\ 13^\circ\ 31'\ 4''\ 90$$

ı the case of a planet the place thus found has also to be cor-
cted for its parallax (Arts 102, 103, of Vol I)

265 *When one of the stars has a proper motion*, the mean of
veral observed distances and position angles will not corre-
ond precisely to the mean of the times To proceed rigorously
that case, we must compute the differences of right ascension
id declination from each observation, and, as these differences
ay be regarded as proportional to the time, their mean will
rrespond to the mean of the times But a briefer method
reduction consists in employing the mean of the observed
stances and position angles *corrected for second differences* Let
, s_2, s_3, &c be the observed distances, and s_0 their arithmetical
ean, p_1, p_2, p_3, &c the observed position angles, and p_0 their
ithmetical mean, T_1, T_2, T_3, &c the corresponding observed
mes, and T their arithmetical mean Let s and p denote the
lues of the distance and position angle corresponding to the

time T We have only to find s and p, with which a single computation of the differences of right ascension and declination will give the quantities required for the time T

Let $\Delta\alpha$, $\Delta\delta$ be the changes of right ascension and declination in one sidereal second If α', δ' are the values which correspond to the time T, we have

$$\begin{aligned} s \sin p &= (\alpha' - \alpha) \cos \tfrac{1}{2} (\delta' + \delta) \\ s \cos p &= \delta' - \delta \end{aligned}$$

and, consequently,

$$\begin{aligned} s_1 \sin p_1 &= (\alpha' - \alpha) \cos \tfrac{1}{2} (\delta' + \delta) + \Delta\alpha\, (T_1 - T) \cos \tfrac{1}{2} (\delta' + \delta) \\ s_1 \cos p_1 &= \delta' - \delta \qquad\qquad\qquad\qquad + \Delta\delta\, (T_1 - T) \end{aligned}$$

Put

$$T_1 - T = \tau_1, \qquad T_2 - T = \tau_2, \qquad T_3 - T = \tau_3, \text{ \&c}$$

and, also,

$$\left.\begin{aligned} f \sin \vartheta &= \Delta\alpha \cos \tfrac{1}{2} (\delta' + \delta) \\ f \cos \vartheta &= \Delta\delta \end{aligned}\right\} \quad (285)$$

then

$$\begin{aligned} s_1 \sin p_1 &= s \sin p + f \sin \vartheta \;\; \tau_1 \\ s_1 \cos p_1 &= s \cos p + f \cos \vartheta \;\; \tau_1 \end{aligned}$$

whence

$$\left.\begin{aligned} s_1 \sin (p - p_1) &= f \sin (p - \vartheta) \;\; \tau_1 \\ s_1 \cos (p - p_1) &= s + f \cos (p - \vartheta) \;\; \tau_1 \end{aligned}\right\} \quad (A)$$

These equations give, first,

$$\tan (p - p_1) = \frac{\frac{f}{s} \sin (p - \vartheta) \;\; \tau_1}{1 + \frac{f}{s} \cos (p - \vartheta) \;\; \tau_1}$$

which developed in series [Pl Trig Art 257] gives

$$p = p_1 + \frac{f}{s} \frac{\sin (p - \vartheta)}{\sin 1''} \tau_1 - \frac{f^2}{s^2} \frac{\sin 2 (p - \vartheta)}{\sin 1''} \frac{\tau_1^2}{2} + \text{\&c}$$

Each observation gives an equation of this form, and the mean of n such equations, observing that $\Sigma\tau = 0$, is

$$p = p_0 - \frac{f^2}{s^2} \frac{\sin 2 (p - \vartheta)}{\sin 1''} \frac{\Sigma\tau^2}{2n}$$

where we neglect terms of the third and higher orders. Here τ is expressed in seconds of time, and we have, very nearly,

$$\frac{\tau^2}{2} = \frac{2 \sin^2 \frac{1}{2} \tau}{(15 \sin 1'')^2}$$

If we employ the quantity m given by Table V.,—*i.e.*

$$m = \frac{2 \sin^2 \frac{1}{2} \tau}{\sin 1''}$$

our formula will become

$$p = p_0 - \left(\frac{f}{15 \, s \sin 1''}\right)^2 \sin 2(p - \vartheta) \frac{\Sigma m}{n} \tag{286}$$

Again, the sum of the squares of the equations (A) gives

$$s_1^2 = s^2 + 2fs \cos(p - \vartheta) \; \tau_1 + (f\tau_1)^2$$

whence

$$\frac{s_1}{s} = \left[1 + \frac{2f \cos(p - \vartheta)}{s} \; \tau_1 + \left(\frac{f\tau_1}{s}\right)^2\right]^{\frac{1}{2}}$$

$$= 1 + \frac{f}{s} \cos(p - \vartheta) \; \tau_1 + \frac{1}{2}\left(\frac{f\tau_1}{s}\right)^2 \sin^2(p - \vartheta)$$

where the terms of the third order are neglected The mean of n equations of this kind is

$$\frac{s_0}{s} = 1 + \frac{f^2 \sin^2(p - \vartheta)}{s^2} \; \frac{\Sigma\tau^2}{2n}$$

and, if M is the modulus of common logarithms, we have, very nearly,

$$\log s = \log s_0 - M\left(\frac{f}{15 \, s}\right)^2 \frac{\sin^2(p - \vartheta)}{\sin 1''} \; \frac{\Sigma m}{n} \tag{287}$$

It will be convenient to find the correction of p_0 in minutes of arc, and the correction of $\log s_0$ in units of the fifth decimal place, for which purpose we have to divide the last term of (286) by 60, and multiply the last term of (287) by 10^5 It will also be convenient to let $\Delta\alpha$ and $\Delta\delta$ be the changes of right ascension and declination in *one minute of mean time*, as they will usually be given in this form, and then we must divide f by 60.164 (= no of sid seconds in 1^m of mean time) With these modifications our formulæ will become

$$\left.\begin{aligned} p &= p_0 - [2\,93984] \frac{f^2}{s^2} \sin 2(p - \vartheta) \frac{\Sigma m}{n} \\ \log s &= \log s_0 - [4\,04135] \frac{f^2}{s^2} \sin^2(p - \vartheta) \frac{\Sigma m}{n} \end{aligned}\right\} \tag{288}$$

where the logarithm of the constant factor is given. The quantities $\Delta\alpha$, $\Delta\delta$, f, and s are supposed to be expressed in seconds of arc.

266 SECOND METHOD —Set the declination circle of the equatorial instrument to the mean declination of the two stars; direct the telescope to a point a little in advance of the stars, and clamp the hour circle The telescope being fixed, the diurnal motion will carry the stars across the field Set the transit threads (*i e.* the transverse thread and the threads parallel to it) in the direction of a circle of declination, and, as the stars pass across the field, observe the clock times of their transits over the threads At the same time, set the micrometer thread upon the two stars successively as each passes the middle of the field, and read the micrometer interval between them, this will give at once the difference of declination The difference of right ascension will be the difference between the observed clock times of transit of the two stars over the same threads, this difference being, of course, reduced to a sidereal interval when necessary, and also corrected for clock rate

For the reduction of defective transits, it is necessary to know the intervals of the threads, which will be found as in the transit instrument (Art 131)

If one of the bodies has a proper motion, the differences obtained are those which belong to the instant when this body was observed

It is usual, in observations of this kind, to avoid all consideration of the errors of the equatorial instrument, by adjusting the movable micrometer thread at the time of the observation so that the star runs along the thread * If the transit threads are exactly perpendicular to the micrometer thread, they will be (very nearly) parallel to a circle of declination drawn through

* This method is, however, not strictly correct, for the apparent path of a star is not precisely perpendicular to the circle of declination, on account of the difference of the refraction at different points of this path The error is, indeed, extremely small, except when the zenith distance is very great, but, if we wish to proceed with the utmost precision, we can set the threads by means of the position circle If the zero P_0 of the position circle has been determined as in Art 261, and the circle is set to this reading, the threads will make the angle λ with a true circle of declination, consequently, δ and δ' being the declinations of the stars, we must add the correction $\frac{1}{15}(\delta' - \delta)\sin\lambda\sec\delta'$ to the observed time of transit of the star whose declination is δ' The angle λ will be found by (276)

the centre of the field, but, to eliminate any error arising from a defect of perpendicularity, the threads should be revolved 180° by the position circle, and the observation repeated; and in a series of consecutive observations there should be a like number of observations in these two positions

The slide moved by the screw is often provided with three micrometer threads the constant distance of which from each other is known, and each of the two bodies is observed on the thread which is nearest to it By this arrangement we are enabled to measure a large difference of declination with but a small motion of the screw, which often facilitates the observation, especially when the stars have nearly the same right ascension, and, consequently, pass the middle of the field nearly at the same time.

The equatorial mounting enables us to repeat the observation as often as we please, with the greatest facility After each observation we have only to revolve the instrument a small distance upon the hour axis and clamp it again a little in advance of the objects.

EXAMPLE —In 1846, November 29, at the Washington Observatory, Mr WALKER observed the difference of right ascension and declination of the planet Neptune and a star as below The micrometer was adjusted so that the star ran along a micrometer thread There were three micrometer threads, numbered 1, 2, 3, of which 1 was nearest the micrometer head, and the constant distance between 2 and 3 was 29 983 revolutions. The readings of the micrometer increased with the declination. The value of a revolution was $R = 15'' 406$

	Transit Thread			Mean of threads	Micrometer	
	I	II	III		Thread	M
						Rev
Star	2ˢ 7	15ˢ 2	27ˢ 4	23ʰ 30ᵐ 15ˢ 10	2	54 564
Neptune	48 2	0 5	12 5	" 32 0 40	3	55 453

$$\alpha' - \alpha = + \ 1 \ 45 \ 30 \qquad + \ 0\,889$$

$$- \ 29\,983$$

$$m = - \ 29\,094$$

$$\delta' - \delta = mR = - \ 7' \, 28'' \, 22$$

The star's place was

$$\alpha = 21^h\ 50^m\ 8^s.99 \qquad \delta = -13^\circ\ 23'\ 35''.11$$

and therefore, neglecting the differential refraction and the planet's parallax, we have

$$\alpha' = 21^h\ 51^m\ 54^s.29 \qquad \delta' = -13^\circ\ 31'\ 3''.33$$

which belong to the time when Neptune was observed. The clock correction was $-3^m\ 31^s.7$, and therefore the place determined corresponds to the sid. time $23^h\ 28^m\ 28^s.7$.

Five observations of the same kind were taken successively, which gave at the sid. time $23^h\ 30^m\ 56^s$, $\alpha' - \alpha = +1^m\ 45^s.23$, $\delta' - \delta = -7'\ 29''.40$.

267. THIRD METHOD.—When the telescope follows the motion of the stars automatically with great accuracy, we may measure the difference of right ascension by placing the micrometer threads at right angles to the diurnal motion and setting the fixed thread upon one star and the movable thread upon the other. The middle point of the arc joining the stars should be as nearly as possible in the centre of the field. If, then, m is the distance of the threads, and its equivalent in arc is $s = mR$, we shall have, very nearly, $\sin(\alpha' - \alpha) = 2 \sin \frac{1}{2} s \sec \delta_0$, in which δ_0 is the mean declination. This method will not be used for stars far from the equator, and therefore in all practical cases we may take $\alpha' - \alpha = s \sec \delta_0$. The objection to this method is, that the difference of declination is not found at the same time.

THE HELIOMETER

268. This instrument belongs to the class of *double image* micrometers. The object glass of an equatorially mounted telescope is bisected, the plane of the section passing through the optical axis of the lens, and the two semi-lenses, set in separate metallic frames, slide upon each other in a direction parallel to the line of section.* Either semi-lens can be moved, and the amount of its motion measured, by a micrometer screw. Each semi-lens forms a complete image of a distant object at the prin-

* The duplication of the image by means of two complete lenses was invented by BOUGUER, in 1748. The improvement of substituting the two halves of a single lens was shortly after made by JOHN DOLLOND.

cipal focus These images (in a perfect instrument) are superposed, and form but a single image at the focus, when the two semi-lenses are in their primitive position forming a single circular lens but when the optical centres of the two semi-lenses are separated by the sliding motion, the two images at the focus are separated from each other by a distance equal to the distance of the centres of the semi-lenses The instrument thus arranged becomes a micrometer adapted for the measurement of small angular distances in general, but, from its supposed peculiar adaptation to the measurement of the sun's diameter, has received the name of the *heliometer* Thus, if *A* (Fig 56) is the image of the sun formed at the focus when the centres of the semi-lenses are coincident, and one semi-lens is then moved until the image it forms is in the position *A′*, so that its limb is in apparent contact with that formed by the other semi-lens, the motion of the semi-lens, as measured by the micrometer screw, gives the measure of the angular diameter of the sun as soon as the angular value of a revolution of the screw is known

Fig 56

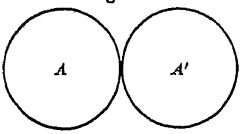

Again, if *A* and *B* (Fig 57) are the images of two stars when the semi-lenses are coincident, and if (the direction of the line of section of the lens being made to coincide with that of the line joining the stars) one semi-lens is moved until the image of *A* is seen at *B*, while that of *B* is moved to *B′*, the motion of the lens as given by the screw determines the angular distance of the stars The position angle of the two stars will also be determined by the angle which the line of section makes with a declination circle, and for this purpose the whole lens is mounted so as to be revolved in a plane at right angles to its optical axis, and its position at any time is shown by a graduated position circle attached to the tube of the telescope

Fig 57

A *B*
* * *
A′ *B′*

Such is the general principle of the instrument, but in order to give precision to the observation, it is necessary that the observed point of coincidence of two images should be in the optical axis of the complete lens, and that these images should be separated by moving the semi-lenses in opposite directions and equal distances on each side of this axis, or, if these conditions are not exactly or approximately satisfied, that we should have the means of computing the correction which the observed

measure requires For this purpose, the ocular is also provided with a micrometer screw and a position circle, and the position of the point of contact of two images, with respect to the line joining the centres of the two position circles, can be determined The mode of using the data thus obtained will be discussed in the general theory of the instrument hereafter given

269 Plate XV represents the heliometer of the Konigsberg Observatory, with which BESSEL determined the parallax of 61 *Cygni* The focal length of the telescope is 102 inches, the diameter of the lens is 6¼ inches The equatorial mounting needs no special explanation, as it is essentially the same as that described in the preceding chapter, except that the stand is here of wood and adjustable by means of four foot screws. The sliding motion of the semi-lenses is produced by the micrometer screws *a*, *b*, which are moved by the observer by means of the rods *a'* and *b'* The measure of the motion is obtained either from the graduated heads of the micrometer screw or from two graduated scales, which are read by the microscopes *e* and *f* The latter method is, however, chiefly used as a check upon the former, and also to verify the regularity of the screw The revolution of the lens about the axis of the tube is effected by a rack (*hh*) and pinion, which is out of view in the drawing, but is acted upon by the rod *c* In order to read the micrometer and position circle after an observation is completed, the telescope has only to be revolved upon the declination axis until its object end is brought to a convenient position for reading

It greatly facilitates the successive *repetitions* of the observation to employ the automatic movement by clock-work, for after an observation the telescope can be revolved upon the declination axis *without stopping the clock*, and after reading the micrometer and position circle it can be restored to its former position in declination, and the objects will be still in the field

It is one of the chief advantages of the heliometer that the precision of the observation is not impaired by the diurnal motion, for even when we do not employ the driving clock, a good result is obtained whenever we have made a *contact* of the images of the observed points near the centre of the field The automatic movement is, therefore, not essential to secure the accuracy of the observation (as it is in the case of the filar mi-

crometer), but is chiefly important as facilitating the repetition of the observation

It has been objected to the heliometer that the optical performance of a semi-lens is imperfect In fact, it appears that, although the correction for spherical aberration of a complete lens may be perfect, it is not perfect for each half of the lens,—at least, it has not been found perfect in the instruments of this kind heretofore constructed There is also some *inflexion* of the rays of light produced at the line of section The combined effect of these causes is an elongation of the separated images in a direction at right angles to the line of section Another objection is, that the brightness of each of the images is but one-half that of an image formed by the whole lens. It has also been found that when the two semi-lenses are in their primitive position, forming a single complete lens, the two superposed images do not always form a single constant image, but that in a disturbed state of the air the images are frequently seen to separate momentarily This effect, of which no entirely satisfactory explanation has been suggested, has been observed in most if not all the heliometers

But these optical defects are more than compensated by the superior accuracy in the measurement of distances, resulting from the great precision with which contacts and coincidences of images can be observed The elongation of the images, being in a direction at right angles to the observed distance, has no sensible effect upon its measure, and its minute effect upon the position angle is eliminated by repeating the observation with opposite motions of the semi-lenses, that is, by interchanging the images The tremulous motion of stars arising from a disturbed state of the air is in general common to the images of both objects, and, therefore, does not affect the observation of a contact, and the momentary separation of the images above referred to, which when the semi-lenses are separated produces a slight tremulous motion of each image, does not cause the images to appear so unsteady *relatively* to each other as the single image formed by a complete lens relatively to the thread of the filar micrometer. Finally, the experience of Bessel and others in the actual use of the instrument has proved that the probable error of a single measure, whether of distance or position angle, is less than in the use of any other micrometer *

* See Bessel's account of the Konigsberg heliometer, *Astron Nach* Vol VIII pp 411–426

The heliometer possesses a great advantage over all other micrometers in the measurement of comparatively large distances. With a filar micrometer the distances observed must be the less the higher the magnifying power employed, since the whole distance must be in the field of view; but no such restriction exists with the heliometer, where only the point of contact or coincidence of two objects is required to be in the field. With the Königsberg instrument above described, a distance of $1° 52'$ can be measured.

GENERAL THEORY OF THE HELIOMETER

270. In the following discussion of the mathematical theory of the heliometer I shall chiefly follow BESSEL.*

I shall first investigate the general formulæ which determine the position of any point of the celestial sphere observed with one semi-lens, the data being—1st, the declination and hour angle of the point of the sphere which is in the *heliometer axis*, which point may be called the pole of the heliometer axis; 2d, the position of the semi-lens with respect to this axis, as given by the micrometer and position circle of the objective; 3d, the position of the point in the field where the image is observed, as given by the micrometer and position circle of the ocular.

By the heliometer axis is here meant the straight line which joins the centres of the position circles of the objective and ocular; and we shall here apply to this axis the notation which in the theory of the equatorial instrument (Art. 245) was applied to the sight line. Thus, $90° - c$ will now express the distance of the pole of the heliometer axis from the pole of the declination axis. If then we denote by δ_1 and τ_1 the declination and hour angle of the pole of the heliometer axis, we shall have, by (258),

$$\left.\begin{aligned} \delta_1 &= d + \Delta d - \gamma \cos (\tau_1 - \vartheta) \\ \tau_1 &= t + \Delta t - \gamma \sin (\tau_1 - \vartheta) \tan \delta_1 + c \sec \delta_1 - i_1 \tan \delta_1 \end{aligned}\right\} \quad (289)$$

where d and t are the readings of the declination and hour circles, and Δd, Δt, γ, ϑ, c, and i_1 are the constants of the equatorial instrument, supposed known. The terms depending on the flexure are here omitted, as not sensibly affecting micrometric observa-

* *Astronomische Untersuchungen*, Vol. I., *Theorie eines mit einem Heliometer versehenen Equatoreal-Instruments*. See, however, also HANSEN'S *Ausführliche Methode mit dem Fraunhoferschen Heliometer Versuche anzustellen*, 4to. Gotha, 1827.

tions, excepting only the term $\varepsilon \sin \varphi \tan \delta_1$, which, on account of the factor $\tan \delta_1$, may be supposed to become sensible for stars very near the pole, and this term is included in our formulæ by the substitution of $i_1 = i - \varepsilon \sin \varphi$

It is assumed that the images of infinitely distant points formed by each semi-lens are mathematical points, that they all lie in the same focal plane perpendicular to the heliometer axis, and that the straight lines joining these points and their images pass through the optical centre of the semi-lens Let this optical centre be denoted by O The point O is moved by the micrometer screw in a plane which is at right angles to the heliometer axis and in a line which should pass through that axis, but a perfect adjustment in this respect will not be assumed, and we shall suppose that the line in which the point O moves is at the distance b from the heliometer axis The position of the point O in this line at any time will be determined by the micrometer reading m, together with the reading that corresponds to some assumed point of the line as an origin Let this origin be the point of the line which is at the least distance ($= b$) from the heliometer axis, and let a be the reading when O is at this point, then the distance of O from this origin at any time will be expressed by $m - a$

The direction of the line of motion of the point O at any time will be given by the position circle. The zero of the position circle will be the reading when this line coincides in direction with a celestial circle whose pole is the pole (Q) of the declination circle of the instrument, as in Art 261 If we here denote this zero reading by n_0, and the reading at any time by n, the position angle of the line of motion will be

$$= n - n_0 + \lambda$$

in which we have, by (276),

$$\lambda = [\gamma \sin (\tau_1 - \vartheta) + i_1] \sec \delta_1 - (c + e \cos \varphi \sin \tau_1) \tan \delta_1 \quad (290)$$

271. Now, in order to express the position of the point O in a general manner, let us take two planes of reference at right angles to each other passing through the heliometer axis, and let one of these planes be the plane of the circle of declination passing through the pole of this axis Let AY, Fig 58, be the intersection of the plane of the circle of declination with the plane of motion of the semi-lens, AX the intersection of the

second plane of reference with the plane of motion, BO the line in which the optical centre O of the semi-lens moves, AO_1 the perpendicular from A upon BO Then, according to the notation above adopted, we have $AO_1 = b$, $O_1O = m - a$, and $ABO = n - n_0 + \lambda = n - k$, where, for brevity, we put

$$k = n_0 - \lambda \tag{291}$$

Hence the distance of O from the two planes of reference, or its co-ordinates on the axes AX and AY, are evidently

$$x = (m - a) \sin (n - k) + b \cos (n - k)$$
$$y = (m - a) \cos (n - k) - b \sin (n - k)$$

The position of the point in the field of the ocular, at which the image of the celestial point is observed, which point we shall call the point o, will be determined by referring it to the same two planes so that if μ, α, ν, $\varkappa$, β have the same signification for the point o that m, a, n, k, b have for the point O, the co-ordinates of o, with reference to these planes are

$$\xi = (\mu - \alpha) \sin (\nu - \varkappa) + \beta \cos (\nu - \varkappa)$$
$$\eta = (\mu - \alpha) \cos (\nu - \varkappa) - \beta \sin (\nu - \varkappa)$$

Fig 58

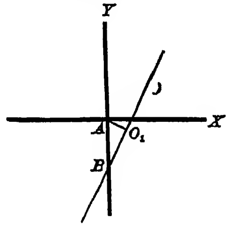

Fig 59.

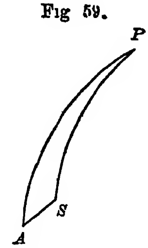

The direction of the sight line oO, or that of a star whose image is observed at o, can now be determined by means of these co-ordinates and the distance f' between the planes of motion of o and O Conceive a straight line to be drawn through o, parallel to the heliometer axis This line and the heliometer axis have the same vanishing point in the celestial sphere, namely, the pole of the heliometer axis Let A, Fig 59, be this point of the sphere, S the star in the sight line oO, P the pole of the heavens The plane passed through the line oA and the line oO makes with the plane of the circle of declination PA the angle $PAS = \pi$; and the angle between the lines oA and oO is measured by the arc $AS = \varDelta$ The distance of O from the line oA is $f' \tan \varDelta$, and its distances from the plane of PA and the plane drawn

through oA at right angles to the plane of PA are $f' \tan \Delta \sin \pi$ and $f' \tan \Delta \cos \pi$. These distances are also expressed by $x - \xi$ and $y - \eta$, and hence we have the equations

$$f' \tan \Delta \sin \pi = x - \xi$$
$$f' \tan \Delta \cos \pi = y - \eta$$

If we take the linear distance of the threads of the micrometer screw of the objective as the common unit of measure of all the quantities m, a, b, μ, α, β, f', and if R is the angular value of one revolution of the screw, we have, since f' is the focal length of the lens,

$$\tan R = \frac{1}{f'}$$

Hence, the above expressions divided by f' give

$$\left.\begin{aligned} \tan \Delta \sin \pi = \tan R\,[(m - a) \sin (n - k) + b \cos (n - k) \\ - (\mu - \alpha) \sin (\nu - \varkappa) - \beta \cos (\nu - \varkappa)] \\ \tan \Delta \cos \pi = \tan R\,[(m - a) \cos (n - k) - b \sin (n - k) \\ - (\mu - \alpha) \cos (\nu - \varkappa) + \beta \sin (\nu - \varkappa)] \end{aligned}\right\} \quad (292)$$

These determine Δ and π, with which the declination δ and hour angle τ of the star are determined by means of the formulæ, derived from the triangle PAS,

$$\left.\begin{aligned} \sin \delta &= \sin \delta_1 \cos \Delta + \cos \delta_1 \sin \Delta \cos \pi \\ \cos \delta \cos (\tau_1 - \tau) &= \cos \delta_1 \cos \Delta - \sin \delta_1 \sin \Delta \cos \pi \\ \cos \delta \sin (\tau_1 - \tau) &= \sin \Delta \sin \pi \end{aligned}\right\} \quad (293)$$

272. We can now proceed to the determination of the relative position of two stars S and S' whose images have been brought into coincidence by giving the two semi-lenses different positions. This relative position is expressed (as in the use of the filar position micrometer) by the distance $s = SS'$, and the position angle at the middle point of $SS' = p$. Thus, in Fig. 55, p. 395, S_0 being the middle point of SS', we have $PS_0S' = p$. The declination δ_0 and hour angle τ_0 of S_0 will be regarded as known.

Let us distinguish the two semi-lenses by the numerals I. and II., and let the formulæ (292) and (293) refer to the semi-lens I. and to the image of the star S formed by it. Let the image of the star S' be formed by the semi-lens II., and let the several quantities referring to this star be distinguished by accents, excepting those which are common to both stars. These common quantities are—1st, the readings n and ν of the position circles, 2d, the

micrometer reading $\mu - \alpha$ and the constants β and $\varkappa$ of the ocular, since these refer to a single point of the field. But we shall suppose the lines of motion of the two semi-lenses to be not perfectly parallel, and shall therefore express the angle which the line of motion of the semi-lens II. makes with a declination circle by $n - k'$; so that, n_0' denoting the zero reading of the position circle when this semi-lens is used, we have

$$k' = n_0' - \lambda \tag{294}$$

$$\left.\begin{aligned}\tan \Delta' \sin \pi' &= \tan R\,[(m' - a') \sin (n - k') + b' \cos (n - k') \\ &\quad - (\mu - \alpha) \sin (\nu - \varkappa) - \beta \cos (\nu - \varkappa)] \\ \tan \Delta' \cos \pi' &= \tan R\,[(m' - a') \cos (n - k') - b' \sin (n - k') \\ &\quad - (\mu - \alpha) \cos (\nu - \varkappa) + \beta \sin (\nu - \varkappa)]\end{aligned}\right\} \tag{295}$$

$$\left.\begin{aligned}\sin \delta' &= \sin \delta_1 \cos \Delta' + \cos \delta_1 \sin \Delta' \cos \pi' \\ \cos \delta' \cos (\tau_1 - \tau') &= \cos \delta_1 \cos \Delta' - \sin \delta_1 \sin \Delta' \cos \pi' \\ \cos \delta' \sin (\tau_1 - \tau') &= \sin \Delta' \sin \pi'\end{aligned}\right\} \tag{296}$$

The triangles PS_0S and PS_0S' (Fig 55, p. 395) give

$$\left.\begin{aligned}\sin \tfrac{1}{2} s \sin p &= -\cos \delta \sin (\tau_0 - \tau) \\ \sin \tfrac{1}{2} s \cos p &= -\sin \delta \cos \delta_0 + \cos \delta \sin \delta_0 \cos (\tau_0 - \tau) \\ \cos \tfrac{1}{2} s &= \sin \delta \sin \delta_0 + \cos \delta \cos \delta_0 \cos (\tau_0 - \tau) \\ &\text{and} \\ \sin \tfrac{1}{2} s \sin p &= \cos \delta' \sin (\tau_0 - \tau') \\ \sin \tfrac{1}{2} s \cos p &= \sin \delta' \cos \delta_0 - \cos \delta' \sin \delta_0 \cos (\tau_0 - \tau') \\ \cos \tfrac{1}{2} s &= \sin \delta' \sin \delta_0 + \cos \delta' \cos \delta_0 \cos (\tau_0 - \tau')\end{aligned}\right\} \tag{297}$$

From these equations we must eliminate δ, τ, δ', and τ', since the values of s and p, resulting from the observation, are to be derived only from the declination δ_0 and hour angle τ_0 of the middle point between the stars, and from the data obtained from the instrument For brevity, let us write u and v instead of $\tan \Delta \sin \pi$ and $\tan \Delta \cos \pi$, and u' and v' instead of $\tan \Delta' \sin \pi'$ and $\tan \Delta' \cos \pi'$ Also, put r and r' for $\sqrt{(1 + uu + vv)}$ and $\sqrt{(1 + u'u' + v'v')}$ The equations (293) and (296) become

$$\begin{aligned}r \sin \delta &= \sin \delta_1 + v \cos \delta_1 \\ r \cos \delta \cos (\tau_1 - \tau) &= \cos \delta_1 - v \sin \delta_1 \\ r \cos \delta \sin (\tau_1 - \tau) &= u\end{aligned}$$

and

$$\begin{aligned}r' \sin \delta' &= \sin \delta_1 + v' \cos \delta_1 \\ r' \cos \delta' \cos (\tau_1 - \tau') &= \cos \delta_1 - v' \sin \delta_1 \\ r' \cos \delta' \sin (\tau_1 - \tau') &= u'\end{aligned}$$

These, combined with (297), give

$$\begin{aligned}
r \sin \tfrac{1}{2}s \sin p &= -\cos \delta_1 \sin(\tau_0-\tau_1) - u\cos(\tau_0-\tau_1) + v\sin\delta_1\sin(\tau_0-\tau_1) \\
r \sin \tfrac{1}{2}s \cos p &= -\sin \delta_1 \cos\delta_0 + \cos\delta_1 \sin\delta_0 \cos(\tau_0-\tau_1) - u\sin\delta_0\sin(\tau_0-\tau_1) \\
&\quad - v[\cos\delta_1\cos\delta_0 + \sin\delta_1\sin\delta_0\cos(\tau_0-\tau_1)] \\
r \cos \tfrac{1}{2}s &= \sin\delta_1\sin\delta_0 + \cos\delta_1\cos\delta_0\cos(\tau_0-\tau_1) - u\cos\delta_0\sin(\tau_0-\tau_1) \\
&\quad + v[\cos\delta_1\sin\delta_0 - \sin\delta_1\cos\delta_0\cos(\tau_0-\tau_1)] \qquad (298)
\end{aligned}$$

and

$$\begin{aligned}
r' \sin \tfrac{1}{2}s \sin p &= \cos \delta_1 \sin(\tau_0-\tau_1) + u'\cos(\tau_0-\tau_1) - v'\sin\delta_1\sin(\tau_0-\tau_1) \\
r' \sin \tfrac{1}{2}s \cos p &= \sin \delta_1 \cos\delta_0 - \cos\delta_1 \sin\delta_0 \cos(\tau_0-\tau_1) + u'\sin\delta_0\sin(\tau_0-\tau_1) \\
&\quad + v'[\cos\delta_1\cos\delta_0 + \sin\delta_1\sin\delta_0\cos(\tau_0-\tau_1)] \\
r' \cos \tfrac{1}{2}s &= \sin\delta_1\sin\delta_0 + \cos\delta_1\cos\delta_0\cos(\tau_0-\tau_1) - u'\cos\delta_0\sin(\tau_0-\tau_1) \\
&\quad + v'[\cos\delta_1\sin\delta_0 - \sin\delta_1\cos\delta_0\cos(\tau_0-\tau_1)] \qquad (299)
\end{aligned}$$

These equations not only determine s and p, but also give a relation between δ_0, τ_0 and δ_1, τ_1. To find this relation, multiply the first two equations of (298) by r', and the first two of (299) by r, and subtract the former products from the latter: we find

$$\begin{aligned}
0 &= (r+r')\cos\delta_1\sin(\tau_0-\tau_1) + (r'u+ru')\cos(\tau_0-\tau_1) - (r'v+rv')\sin\delta_1\sin(\tau_0-\tau_1) \\
0 &= (r+r')[\sin\delta_1\cos\delta_0 - \cos\delta_1\sin\delta_0\cos(\tau_0-\tau_1)] + (r'u+ru')\sin\delta_0\sin(\tau_0-\tau_1) \\
&\quad + (r'v+rv')[\cos\delta_1\cos\delta_0 + \sin\delta_1\sin\delta_0\cos(\tau_0-\tau_1)]
\end{aligned}$$

which, if we put

$$\left.\begin{aligned}
\tan g \sin G &= \frac{r'u+ru'}{r+r'} \\
\tan g \cos G &= \frac{r'v+rv'}{r+r'}
\end{aligned}\right\} \qquad (300)$$

may be written in the following form:

$$\begin{aligned}
0 &= [\cos\delta_1 - \sin\delta_1\tan g\cos G]\sin(\tau_0-\tau_1) + \tan g\sin G\cos(\tau_0-\tau_1) \\
\frac{\sin\delta_1 + \cos\delta_1\tan g\cos G}{\tan\delta_0} &= [\cos\delta_1 - \sin\delta_1\tan g\cos G]\cos(\tau_0-\tau_1) - \tan g\sin G\sin(\tau_0-\tau_1)
\end{aligned}$$

If we multiply each of these by $\cos g$, and then introduce the auxiliaries h and H, determined by the conditions

$$\left.\begin{aligned}
\sin h &= \sin g \sin G \\
\cos h \sin H &= \sin g \cos G \\
\cos h \cos H &= \cos g
\end{aligned}\right\} \qquad (301)$$

we shall have

$$\begin{aligned}
0 &= \cos h \cos(\delta_1+H)\sin(\tau_0-\tau_1) + \sin h\cos(\tau_0-\tau_1) \\
\frac{\cos h\sin(\delta_1+H)}{\tan\delta_0} &= \cos h\cos(\delta_1+H)\cos(\tau_0-\tau_1) - \sin h\sin(\tau_0-\tau_1)
\end{aligned}$$

from which we deduce

$$\frac{\cos h \sin(\delta_1 + H)}{\tan \delta_0} \cos(\tau_0 - \tau_1) = \cos h \cos(\delta_1 + H)$$

$$\frac{\cos h \sin(\delta_1 + H)}{\tan \delta_0} \sin(\tau_0 - \tau_1) = -\sin h$$

and the sum of the squares of these gives, by a simple reduction,

$$\cos h \sin(\delta_1 + H) = \sin \delta_0$$

By the combination of the last three equations we have, therefore,

$$\left.\begin{aligned} \sin \delta_0 &= \cos h \sin(\delta_1 + H) \\ \cos \delta_0 \cos(\tau_0 - \tau_1) &= \cos h \cos(\delta_1 + H) \\ \cos \delta_0 \sin(\tau_0 - \tau_1) &= -\sin h \end{aligned}\right\} \quad (302)$$

If we regard δ_1 and τ_1 as given by the declination and hour circles of the instrument, with the aid of (289), we can employ these equations to obtain δ_0 and τ_0, or, if δ_0 and τ_0 be regarded as known, we can employ the same equations to obtain δ_1 and τ_1, and then the reading of the declination and hour circles is altogether dispensed with

The values of s and p will be derived from the following equations, which are obtained by adding (298) and (299).

$$\left.\begin{aligned} (r+r')\sin\tfrac{1}{2}s \sin p &= (u'-u)\cos(\tau_0-\tau_1) - (v'-v)\sin\delta_1\sin(\tau_0-\tau_1) \\ (r+r')\sin\tfrac{1}{2}s \cos p &= (u'-u)\sin\delta_0\sin(\tau_0-\tau_1) \\ &\quad + (v'-v)\left[\cos\delta_1\cos\delta_0 + \sin\delta_1\sin\delta_0\cos(\tau_0-\tau_1)\right] \\ (r+r')\cos\tfrac{1}{2}s &= 2\left[\sin\delta_1\sin\delta_0 + \cos\delta_1\cos\delta_0\cos(\tau_0-\tau_1)\right] \\ &\quad - (u'+u)\cos\delta_0\sin(\tau_0-\tau_1) \\ &\quad + (v'+v)\left[\cos\delta_1\sin\delta_0 - \sin\delta_1\cos\delta_0\cos(\tau_0-\tau_1)\right] \end{aligned}\right\} \quad (303)$$

In these rigorous formulæ, every thing in the second members is known But it will never be necessary to employ them in this rigorous form, except when the two stars are so near to the pole that the quantities u, v, u', v' can no longer be regarded as small in relation to the polar distance. In almost all cases, therefore, an approximate development of the formulæ will suffice, and this I proceed to consider

273 The approximate development of the equations (303), when the terms involving the third and higher powers of u, v, u', v' are neglected, is extremely simple, and would lead us to the formulæ usually given for the heliometer But it is easy to see

that such a development is not sufficiently exact, even for stars near the equator, when their distance approaches to the maximum limit (of about 2°) which the instrument is capable of measuring, unless a special method of observation is exclusively employed by which the terms of the higher orders are rendered practically insensible The nature of such methods of observation will be seen hereafter, but, in order to obtain the most generally useful formulæ, which can afterwards be simplified and adapted to special cases, I shall follow out the very precise development, given by BESSEL, in which the terms of the third order are retained

In order to develop the equations (303) as far as terms of the third order in u, v, u', v', it is necessary to develop the factors by which $u' - u, v' - v, u' + u, v' + v$ are multiplied, as far as terms of the second order only If in (300) we substitute the values of $r = \sqrt{(1 + uu + vv)}$ and $r' = \sqrt{(1 + u'u' + v'v')}$, and develop the expressions, we shall find that when terms of the third order are neglected they are reduced to

$$\tan g \sin G = \tfrac{1}{2}(u' + u)$$
$$\tan g \cos G = \tfrac{1}{2}(v' + v)$$

and consequently we shall have, with the same degree of approximation,

$$\sin g \sin G = \tfrac{1}{2}(u' + u)$$
$$\sin g \cos G = \tfrac{1}{2}(v' + v)$$
$$\cos g = 1 - \tfrac{1}{8}(u' + u)^2 - \tfrac{1}{8}(v' + v)^2$$

The equations (302), by the substitution of the values of h and H according to (301), become

$$\sin \delta_0 = \sin \delta_1 \cos g + \cos \delta_1 \sin g \cos G$$
$$\cos \delta_0 \cos(\tau_0 - \tau_1) = \cos \delta_1 \cos g - \sin \delta_1 \sin g \cos G$$
$$\cos \delta_0 \sin(\tau_0 - \tau_1) = - \sin g \sin G$$

from which follow, also,

$$\cos g = \sin \delta_1 \sin \delta_0 + \cos \delta_1 \cos \delta_0 \cos(\tau_0 - \tau_1)$$
$$\sin g \cos G = \cos \delta_1 \sin \delta_0 - \sin \delta_1 \cos \delta_0 \cos(\tau_0 - \tau_1)$$
$$\sin g \sin G = - \cos \delta_0 \sin(\tau_0 - \tau_1)$$

With the aid of these equations the required development of (303) is readily obtained We find

$$(r + r')\sin\tfrac{1}{2}s\sin p = (u' - u)\left[1 - \tfrac{1}{8}(u' + u)^2 - \tfrac{1}{8}(u' + u)^2\tan^2\delta_0\right] + (v' - v)\left[\tfrac{1}{2}(u' + u)\tan\delta_0 - \tfrac{1}{4}(u' + u)(v' + v)\right]$$

$$(r + r')\sin\tfrac{1}{2}s\cos p = (v' - v)\left[1 - \tfrac{1}{8}(v' + v)^2 - \tfrac{1}{8}(u' + u)^2\tan^2\delta_0\right] - \tfrac{1}{2}(u' - u)(u' + u)\tan\delta_0$$

$$(r + r')\cos\tfrac{1}{2}s = 2\left[1 + \tfrac{1}{8}(u' + u)^2 + \tfrac{1}{8}(v' + v)^2\right]$$

or, dividing the first two of these by the third,

$$\left.\begin{aligned} 2\tan\tfrac{1}{2}s\sin p &= (u'-u)\left[1-\tfrac{1}{4}(u'+u)^2-\tfrac{1}{8}(v'+v)^2-\tfrac{1}{8}(u'+u)^2\tan^2\delta_0\right] \\ &\quad + (v'-v)\left[\tfrac{1}{2}(u'+u)\tan\delta_0 - \tfrac{1}{4}(u'+u)(v'+v)\right] \\ 2\tan\tfrac{1}{2}s\cos p &= (v'-v)\left[1-\tfrac{1}{4}(v'+v)^2-\tfrac{1}{8}(u'+u)^2-\tfrac{1}{8}(u'+u)^2\tan^2\delta_0\right] \\ &\quad - \tfrac{1}{2}(u'-u)(u'+u)\tan\delta_0 \end{aligned}\right\} \quad (304)$$

in which we are now to substitute convenient expressions for $u' - u$, $v' - v$, $u' + u$, $v' + v$

It is expedient in practice to make all our observations depend upon but one of the micrometer screws of the two semi-lenses, since all the time that we may have to devote to the investigation of the errors of the screws may then be expended upon this one Let us suppose the micrometer screw of the semi-lens II to be thus adopted, and let w denote the angle between the lines of motion of the semi-lens II and of the ocular, so that

$$w = (n - k') - (\nu - \varkappa)$$

and let f and F be determined by the conditions

$$\begin{aligned} f\sin F &= \tan R\left[(m-a)\sin(k'-k) + b\cos(k'-k) + (\mu-\alpha)\sin w - \beta\cos w\right] \\ f\cos F &= \tan R\left[(m-a)\cos(k'-k) - b\sin(k'-k) - (\mu-\alpha)\cos w - \beta\sin w\right] \end{aligned} \quad (305)$$

Multiplying these respectively by $\cos(n - k')$ and $\sin(n - k')$, and also by $-\sin(n - k')$ and $\cos(n - k')$, the sums of the products are, by (292),

$$\left.\begin{aligned} u &= f\sin(n - k' + F) \\ v &= f\cos(n - k' + F) \end{aligned}\right\} \quad (306)$$

from which it follows that f and $n - k' + F$ are the same as $\tan\varDelta$ and π.

If we also assume S and E to be determined by the conditions

$$\begin{aligned} 2\tan\tfrac{1}{2}S\sin E &= \tan R\left[-(m - a)\sin(k' - k) + b' - b\cos(k' - k)\right] \\ 2\tan\tfrac{1}{2}S\cos E &= \tan R\left[(m' - a') - (m - a)\cos(k' - k) + b\sin(k' - k)\right] \end{aligned} \quad (307)$$

we shall find, by means of the multiplication and addition above employed, and by comparison with (292) and (295),

$$\left.\begin{aligned} u' - u &= 2 \tan \tfrac{1}{2} S \sin (n - k' + E) \\ v' - v &= 2 \tan \tfrac{1}{2} S \cos (n - k' + E) \end{aligned}\right\} \quad (308)$$

and from (306) and (308),

$$\left.\begin{aligned} \tfrac{1}{2}(u' + u) &= \tan \tfrac{1}{2} S \sin (n - k' + E) + f \sin (n - k' + F) \\ \tfrac{1}{2}(v' + v) &= \tan \tfrac{1}{2} S \cos (n - k' + E) + f \cos (n - k' + F) \end{aligned}\right\} \quad (309)$$

To facilitate the substitution of these values in (304), let us put

$$q = n - k' + E \qquad u_1 = \tfrac{1}{2}(u' + u) \qquad v_1 = \tfrac{1}{2}(v' + v)$$

we shall then have

$$\frac{\tan \frac{1}{2} s}{\tan \frac{1}{2} S} \sin p = \sin q \,(1 - u_1^2 - \tfrac{1}{2} v_1^2 - \tfrac{1}{2} u_1^2 \tan^2 \delta_0) + \cos q \,(u_1 \tan \delta_0 - u_1 v_1)$$

$$\frac{\tan \frac{1}{2} s}{\tan \frac{1}{2} S} \cos p = \cos q \,(1 - v_1^2 - \tfrac{1}{2} u_1^2 - \tfrac{1}{2} u_1^2 \tan^2 \delta_0) - \sin q \;\, u_1 \tan \delta_0$$

Multiplying these respectively by $\cos q$ and $-\sin q$, and again by $\sin q$ and $\cos q$, the sums of the products are

$$\frac{\tan \frac{1}{2} s}{\tan \frac{1}{2} S} \sin(p - q) = u_1 \tan \delta_0 - \tfrac{1}{2} \cos q \,[2 v_1 (u_1 \cos q - v_1 \sin q) + (u_1^2 + v_1^2) \sin q]$$

$$\frac{\tan \frac{1}{2} s}{\tan \frac{1}{2} S} \cos(p - q) = 1 - (u_1^2 + v_1^2) - \tfrac{1}{2} u_1^2 \tan^2 \delta_0 + \tfrac{1}{2} (u_1 \cos q - v_1 \sin q)^2$$

The square root of the sum of the squares of these equations, neglecting terms of the 4th degree in their second members, gives

$$\tan \tfrac{1}{2} s = \tan \tfrac{1}{2} S \,[1 - (u_1^2 + v_1^2) + \tfrac{1}{2} (u_1 \cos q - v_1 \sin q)^2]$$

and their quotient gives $\tan (p - q)$, for which we may write $p - q$; whence

$$p - q = u_1 \tan \delta_0 - \tfrac{1}{2} \cos q \,[2 v_1 (u_1 \cos q - v_1 \sin q) + (u_1^2 + v_1^2) \sin q]$$

But with the notation just adopted, the expressions (309) become

$$\begin{aligned} u_1 &= \tan \tfrac{1}{2} S \sin q + f \sin (q + F - E) \\ v_1 &= \tan \tfrac{1}{2} S \cos q + f \cos (q + F - E) \end{aligned}$$

whence, also,

$$u_1^2 + v_1^2 = \tan^2 \tfrac{1}{2} S + 2 f \tan \tfrac{1}{2} S \cos (F - E) + f^2$$

$$u_1 \cos q - v_1 \sin q = f \sin (F - E)$$

by the substitution of which we obtain

$$\begin{aligned}
\tan \tfrac{1}{2}s &= \tan \tfrac{1}{2}S\left\{1 - \tan^2 \tfrac{1}{2}S - 2f \tan \tfrac{1}{2}S \cos(F-E) - \tfrac{1}{2}f^2[1+\cos^2(F-E)]\right\} \\
p &= q + [\tan \tfrac{1}{2}S \sin q + f \sin (q + F - E)] \tan \delta_0 \\
&\quad - \tfrac{1}{2}\cos q\,[\tan^2 \tfrac{1}{2}S \sin q + 2f \tan \tfrac{1}{2}S \sin (q + F - E) \\
&\quad + f^2 \sin (q + 2F - 2E)]
\end{aligned} \tag{310}$$

In the terms of the order of $\tan^2 \frac{1}{2}S$, we may put p for q, but in those of the order of $\tan \frac{1}{2}s$, in the first line of the value of p, we shall employ the more accurate value

$$q = p - [\tan \tfrac{1}{2}S \sin p + f \sin (p + F - E)] \tan \delta_0$$

Dividing the first equation of (310) by $1 - \tan^2 \frac{1}{2}S$, the first member becomes $\frac{1}{2}\tan s$, within the degree of approximation here adopted, and in the small terms we may put $\frac{1}{2}s$ for $\tan \frac{1}{2}S$ The equations thus become

$$\begin{aligned}
\tan s &= 2 \tan \tfrac{1}{2}S\left\{1 - fs \cos (F - E) - \tfrac{1}{2}f^2 [1 + \cos^2 (F - E)]\right\} \\
p &= n - k' + E + [\tfrac{1}{2}s \sin p + f \sin (p + F - E)] \tan \delta_0 \\
&\quad - [\tfrac{1}{8}s^2 \sin p + \tfrac{1}{2}fs \sin (p + F - E) + \tfrac{1}{2}f^2 \sin (p + 2F - 2E)] \cos p \\
&\quad - [\tfrac{1}{8}s^2 \sin 2p + \tfrac{1}{2}fs \sin (2p + F - E) + \tfrac{1}{2}f^2 \sin (2p + 2F - 2E)] \tan^2 \delta_0
\end{aligned}$$

These may, however, be still further simplified The angle E is, in general, either very small or very nearly 180°, according as $m' - a' - (m - a)$ is a positive or negative quantity in (307) The case must be excepted in which the distance s is itself so small as to be regarded as of the same order as $k' - k$ and $b' - b$; but in this case the terms involving E are themselves so small that they can be wholly neglected Putting, therefore, in the small terms, $E = 0$ or $= 180°$, and also substituting the value of $k' = n_0' - \lambda$, and of λ by (290), we have, finally,

$$\left.\begin{aligned}
\tan s &= 2 \tan \tfrac{1}{2}S\,[1 \mp fs \cos F - \tfrac{1}{2}f^2 (1 + \cos^2 F)] \\
p &= n - n_0' + E + [\gamma \sin (\tau_0 - \vartheta) + i_1] \sec \delta_0 \\
&\quad + [\tfrac{1}{2}s \sin p \pm f \sin (p + F) - c - e \cos \varphi \sin \tau_0] \tan \delta_0 \\
&\quad - [\tfrac{1}{8}s^2 \sin p \pm \tfrac{1}{2}fs \sin (p + F) + \tfrac{1}{2}f^2 \sin (p + 2F)] \cos p \\
&\quad - [\tfrac{1}{8}s^2 \sin 2p \pm \tfrac{1}{2}fs \sin (2p + F) + \tfrac{1}{2}f^2 \sin (2p + 2F)] \tan^2 \delta_0
\end{aligned}\right\} \tag{311}$$

in which the upper or the lower sign is to be taken according as $m' - a' - (m - a)$ is positive or negative. In the value of λ (290), we have here substituted τ_0 and δ_0 for τ_1 and δ_1, which will produce no appreciable error.

The angle p here expresses the position angle *from* the star

whose image is formed by the semi-lens I. *to* the star whose image is formed by the semi-lens II It is also to be observed that we have employed the formulæ for the equatorial instrument as given for the case in which the declination circle *precedes* the telescope. so that, according to Arts. 248 and 250, when the declination circle *follows*, τ_0 will be the hour angle increased by 180°, and δ_0 will be the supplement of the declination, consequently, also, p will be the position angle increased by 180°

274 The coincidence of the images of the two stars S and S' can be produced at the point O (Art 271) in two different ways, namely, by opposite motions of the semi-lens II relatively to the semi-lens I By the combination of the observations made in these two ways, we shall be able to eliminate $a, a', b, b', k'-k$, and it will no longer be necessary to determine these quantities

Let us suppose the semi-lens I to remain in the same position as in the first observation, and that the semi-lens II is now moved in a direction opposite to that of its former motion until the second coincidence of the images is produced This will, in general, require a common revolution, to a small extent, of the two lenses about the heliometer axis, thus slightly changing the reading of the position circle, which reading we shall now denote by n_1 Let the reading of the micrometer in this observation be m_1', and let the corresponding values of S, E, and p be denoted by S_1, E_1, and p_1 The formulæ (307) and (311), with these changes, will then apply to this second observation, and (307) will become

$$2 \tan \tfrac{1}{2} S_1 \sin E_1 = \tan R\,[-(m-a) \sin (k'-k) + b' - b \cos (k'-k)]$$
$$2 \tan \tfrac{1}{2} S_1 \cos E_1 = \tan R\,[m_1' - a' - (m-a) \cos (k'-k) + b \sin (k'-k)]$$

Since $m_1' - a'$ and $m' - a'$ fall upon opposite sides of $m - a$, the quantities $2 \tan \frac{1}{2} S_1 \cos E_1$ and $2 \tan \frac{1}{2} S \cos E$ have opposite signs, but $2 \tan \frac{1}{2} S_1 \sin E_1$ and $2 \tan \frac{1}{2} S \sin E$ are equal, from which it follows (since S_1 and S can differ only by terms of the 3d order) that E_1 differs from $180° - E$ only by terms of the order of the product of $k' - k$ into s^2, and this difference may be regarded as altogether insensible In the application of (311) to the second observation, therefore, the meaning of the double sign will be reversed We can, however, avoid all the difficulty in distinguishing the cases in which E is to be taken greater or less than 90°, by calling that observation *the first*, for which $E < 90°$, and

applying to it the notation m', n Under this condition, the upper signs of (311) will be used for the first observation and the lower signs for the second, and the value of p_1 for the second observation will be $180° + p$

The formulæ for the two observations may, therefore, be expressed as follows, where we introduce the value of $2 \tan \frac{1}{2} S$ given by the second equation of (307) after neglecting the insensible terms (which terms, however, even if they were sensible, would be eliminated by the subsequent combination of the two observations)

1st Observation

$$\tan s = \tan R \frac{(m' - a' - m + a)}{\cos E} \left[1 - fs \cos F - \tfrac{1}{2} f^2 (1 + \cos^2 F)\right]$$

$$\begin{aligned} p = n - n_0' + E &+ [\gamma \sin(\tau_0 - \vartheta) + i_1] \sec \delta_0 \\ &+ [\tfrac{1}{2} s \sin p + f \sin(p + F) - c - e \cos \varphi \sin \tau_0] \tan \delta_0 \\ &- [\tfrac{1}{8} s^2 \sin p + \tfrac{1}{2} fs \sin(p + F) + \tfrac{1}{2} f^2 \sin(p + 2F)] \cos p \\ &- [\tfrac{1}{8} s^2 \sin 2p + \tfrac{1}{2} fs \sin(2p + F) + \tfrac{1}{2} f^2 \sin(2p + 2F)] \tan^2 \delta_0 \end{aligned}$$

2d Observation

$$\tan s = \tan R \frac{(m - a - m_1' + a')}{\cos E} \left[1 + fs \cos F - \tfrac{1}{2} f^2 (1 + \cos^2 F)\right]$$

$$\begin{aligned} p = n_1 - n_0' - E &+ [\gamma \sin(\tau_0 - \vartheta) + i_1] \sec \delta_0 \\ &+ [-\tfrac{1}{2} s \sin p + f \sin(p + F) - c - e \cos \varphi \sin \tau_0] \tan \delta_0 \\ &- [\tfrac{1}{8} s^2 \sin p - \tfrac{1}{2} fs \sin(p + F) + \tfrac{1}{2} f^2 \sin(p + 2F)] \cos p \\ &- [\tfrac{1}{8} s^2 \sin 2p - \tfrac{1}{2} fs \sin(2p + F) + \tfrac{1}{2} f^2 \sin(2p + 2F)] \tan^2 \delta_0 \end{aligned}$$

From the mean of the two observations, we have

$$\left.\begin{aligned} \tan s &= \tan R \frac{m' - m_1'}{2 \cos E} \left[1 - \tfrac{1}{2} f^2 (1 + \cos^2 F)\right] \\ p &= \frac{n + n_1}{2} - n_0' + [\gamma \sin(\tau_0 - \vartheta) + i_1] \sec \delta_0 \\ &\quad + [f \sin(p + F) - c - e \cos \varphi \sin \tau_0] \tan \delta_0 \\ &\quad - \tfrac{1}{16} s^2 \sin 2p\,(1 + 2 \tan^2 \delta_0) \\ &\quad - \tfrac{1}{2} f^2 [\sin(p + 2F) \cos p + \sin(2p + 2F) \tan^2 \delta_0] \end{aligned}\right\} \quad (312)$$

The value of E, obtained from the difference of the two values of p, is

$$\begin{aligned} E = \frac{n_1 - n}{2} &- \tfrac{1}{2} s \sin p \tan \delta_0 \\ &+ \tfrac{1}{2} fs [\sin(p + F) \cos p + \sin(2p + F) \tan^2 \delta_0] \end{aligned} \qquad (313)$$

But it will not usually be necessary to regard the divisor $\cos E$ in the formula for $\tan s$, for it can differ sensibly from unity only in

those cases in which s is an extremely small quantity, and in these cases we may take $E = \frac{1}{2}(n_1 - n)$

The method of observation with the heliometer, in which two corresponding observations in opposite positions of the semi-lenses are combined, may be regarded as fundamental and essential The same degree of accuracy which it affords cannot be attained by single observations, the reduction of which requires an accurate determination of the quantities a, a', b, b', $k' - k$, for, in addition to the uncertainty of such determinations for any given position of the instrument, it is not certain that the values of these quantities are really constant for all positions of the telescope with respect to the horizon It is true that our formulæ still involve f and F, which depend upon a, a', &c , but a *precise* determination of these quantities is no longer necessary, since they enter only into the small terms of the formulæ Moreover, by a proper method of observation, f and F may be dispensed with altogether, as I next proceed to show

275 Assuming that a complete observation always consists of two corresponding observations, as in the preceding article, there are yet three different methods of making such an observation, each of which offers some advantage over the others These I propose to consider separately

First Method of Observation—Let the semi-lens which is to remain fixed during the observation be set so that its sight line shall be parallel to the heliometer axis This will be effected by making $m - a = \mu - \alpha$, and at the same time $n - k = \nu - \varkappa$, or, in the most simple manner, by making $m - a = \mu - \alpha = 0$. We shall then have $f = 0$, and the formulæ (312) become

$$\left.\begin{aligned}
\tan s &= \tan R \, \frac{m' - m_1'}{2 \cos E} \\
p &= \frac{n + n_1}{2} - n_0' + [\gamma \sin(\tau_0 - \vartheta) + i_1] \sec \delta_0 \\
&\quad - (c + e \cos \varphi \sin \tau_0) \tan \delta_0 - \tfrac{1}{16} s^2 \sin 2p \, (1 + 2 \tan^2 \delta_0)
\end{aligned}\right\} \qquad (314)$$

This method recommends itself by the symmetry which it gives to the observations, as well as by the simplicity of their reduction

Second Method—In this method, we make the lines of motion of the objective and ocular parallel, or $w = 0$, and also make $m = a$, but the ocular is moved between the two observations, being set for one observation so that $\mu - \alpha = \frac{1}{2}(m' - a')$, and

for the other so that $\mu - \alpha = \frac{1}{2}(m_1' - a')$ We then have $f = \frac{1}{2}s$ and $F = 180°$ for one observation, but $F = 0$ for the other These changes must be made in the two sets of formulæ from which (312) were obtained, for in the combination expressed by (312) the ocular was supposed to have the same position in both observations. Here, however, we must put $F = 180°$ in the first and $F = 0$ in the second, at the same time substituting $\frac{1}{2}s$ for f, and then make the combination we thus obtain

$$\left.\begin{aligned} \tan s &= \tan R \frac{m' - m_1'}{2 \cos E} \\ p &= \frac{n + n_1}{2} - n_0' + [\gamma \sin(\tau_0 - \vartheta) + i_1] \sec \delta_0 \\ &\qquad - (c + e \cos \varphi \sin \tau_0) \tan \delta_0 \end{aligned}\right\} \quad (315)$$

In this method, the rays from the two stars make the same angle ($= \frac{1}{2}s$) with the optical axis of each semi-lens, whereas in the first method the rays from one star make the angle s with this axis and those from the other star are parallel to the axis The second method, therefore, offers the advantage of bringing both images at equal distances from the axis, thereby producing equal distinctness and accuracy of definition in them, and avoiding the defects of the lens, which appear more prominently as the rays fall more obliquely The greater simplicity of the first method in the observation will, however, give it the preference so long as the distance to be measured is not so great as to carry one of the objects beyond the limits of distinct vision

Third Method—This combines the advantage of the second method with the simplicity of the first. We place the ocular permanently in the heliometer axis, and make each observation with the semi-lenses at equal distances from that axis and on opposite sides of it The chief objection to this method is that, since both lenses are moved, it becomes necessary to know the value of a revolution of the screws of both, but, as has been already remarked in Art 273, it is expedient to devote all our attention to the investigation of the errors of but one screw It may also be objected to this method that, when the distance to be measured is rapidly changing, time will be lost in effecting the requisite symmetrical arrangement of the observations This objection, however, may be made with even greater force against the second method, but the first method is free from it

With any of these methods, if we wish to free the results from the effects of flexure of the declination axis and from the incli-

nation of this axis to the hour axis, without supposing i_1 and c to be known, we take two complete observations (*i. e.* pairs of observations) in the two positions of the declination circle, *preceding* and *following;* for we see by (314) and (315) that i_1 and c will vanish from the mean of these two observations

In Art 263, we have seen that $\frac{1}{16}s^2 \sin 2p\,(1 + 2\tan^2 \delta_0)$ is the correction to be added to the position angle at the middle point between the two stars to reduce it to the mean ($= p_0$) of the position angles at the two stars consequently, if we neglect this term in the first method of observation above given, the resulting position angle will be at once the mean position angle p_0, with which and the distance s we find the differences of declination and right ascension of the stars, by Art 264 The results are yet to be freed from the effect of refraction, by the methods hereafter to be given.

276 I have thus far assumed that the contact of the images is always produced at a certain *known* point (o) of the plane of motion of the ocular It will be well always to make the contacts at the middle point of the field, but the position of this point will usually be *estimated* only, unless it is indicated by a square formed of intersecting threads or some equivalent contrivance, which, however, involves the necessity of illuminating the field or the threads Let us inquire, therefore, to what extent an erroneous estimate of the position of the middle of the field will affect the observed measures

The quantities f and F, determined by (305), express the actual position of the middle of the field (o), but if the point of contact is a different point (o'), the values given by the formulæ require a correction

Let h denote the angular distance of o' from o, and H the angle which oo' makes with the observed arc SS', H and w being reckoned in the same direction The quantities $\tan R\ (\mu - \alpha) \sin w$ and $\tan R\ (\mu - \alpha) \cos w$, which express the angular distances of the point o from SS', and from a perpendicular to SS' drawn through the heliometer axis, must be increased by $h \sin H$ and $h \cos H$ respectively Consequently, $f \sin F$ and $f \cos F$ will require the corrections $h \sin H$ and $-h \cos H$ hence, if we suppose h to be so small that its square may be neglected, the effect upon $\tan s$ will be, by (311),

$$\pm hs^2 \cos H + hsf\,(2 \cos F \cos H - \sin F \sin H)$$

and the effect upon the position angle will be

$$\mp h \sin(p-H)\tan\delta_0 \pm \tfrac{1}{2} hs[\sin(p-H)\cos p + \sin(2p-H)\tan^2\delta_0] + hf[\sin(p+F-H)\cos p + \sin(2p+F-H)\tan^2\delta_0]$$

Since h will be but a few minutes in any case, it follows that the effect upon the distance will be usually inappreciable even for the greatest values of s and f. The first and principal term of the effect upon the position angle is proportional to the tangent of the declination, but it vanishes when $\sin(p-H)=0$, that is, when $H=p$, or $H=p+180°$, or when the point at which the contact is made lies in the declination circle which passes through the centre of the field. When the telescope follows the diurnal motion accurately, and a contact has once been made in the centre of the field, the subsequent observations will all be very near this point. The greater the declination, the more careful must we be to make the contacts near the declination circle of the centre of the field, but it is evident from the preceding discussion that we shall probably always be able to effect this with sufficient accuracy by estimating the position of this centre, without resorting to the use of illuminated threads.

DETERMINATION OF THE CONSTANTS OF THE HELIOMETER

277. *To find a, a', α.*—Direct the telescope to any fixed point, and, having brought the centre of the semi-lens I. nearly into the heliometer axis (by estimation), revolve the lens 180° about the axis. If the image of the point appears still in the same point of the field of view, the reading m of the micrometer is then evidently $= a$. If the image has moved, we have only to move the semi-lens by its micrometer screw until the image has been carried to the middle point between its first and second positions, and, if this middle point has been correctly estimated, the semi-revolution will no longer affect the apparent position of the image. By repeating this process, we shall very quickly find the exact position of the semi-lens when its centre is at the minimum distance from the heliometer axis, for which $m = a$. In the same manner, a' will be found for the semi-lens II., and, by a similar process, revolving the ocular 180°, α will be found.

278. *To find $k'-k$, $b'-b$.*—These quantities produce the greater influence upon the readings of the position circle, the

aller the distance between two points whose images are ›ught into coincidence They will, therefore, be most accu- ely determined by *complete* observations (Art 275) of the dis- ıce and position angle of the components of a double star. ıce s is in this case extremely small, we shall have $E = \frac{1}{2}(n_1 - n)$, d, neglecting the insensible terms in (307), the single observa- ns will give

$$s \sin \tfrac{1}{2}(n_1 - n) = R\,[(m - a)(k - k') + b' - b]$$
$$s \cos \tfrac{1}{2}(n_1 - n) = R\,[m' - a' - m + a]$$

d (since in the second observation we put $180° - E$ for E)

$$s \sin \tfrac{1}{2}(n_1 - n) = R\,[(m - a)(k - k') + b' - b]$$
$$s \cos \tfrac{1}{2}(n_1 - n) = R\,[m - a - m_1' + a']$$

m the combination of which we derive

$$(m - a)(k - k') + b' - b = \tfrac{1}{2}(m' - m_1') \tan \tfrac{1}{2}(n_1 - n) \quad (316)$$

which the second member and also the coefficient of $k - k'$ are own from the observation By setting the semi-lens I at various ıdings m, and making the contacts by moving the semi-lens , we shall thus for each complete observation have an equa- n of condition of the form (316), and since the coefficients of $- k'$ in these equations may be made to have very different lues, the combination by the method of least squares will give very accurate determination of both $k - k'$ and $b' - b$

We may here observe that it is not necessary, nor is it advan- geous, to bring the images of the stars into coincidence It ll be better to bring the image of one of the components ·med by one semi-lens to the middle point between the two ages of the two components formed by the other semi-lens ıus, if a and b are the images of the two components formed the semi-lens I, a' and b' those formed by the semi-lens II., the first observation the images will stand thus:

$$\begin{array}{cccc} a' & a & b' & b \\ * & * & * & * \end{array}$$

d in the second observation thus.

$$\begin{array}{cccc} a & a' & b & b' \\ * & * & * & * \end{array}$$

As the components are supposed very close together, the bisection of their distance will be more accurately estimated than a coincidence of superposed images. This method of observation is always advisable when the distance to be measured is but a few seconds

I should have remarked before that the quantity $k - k'$ is the difference of the index errors of the position circle for the two semi-lenses, since from the values of k and k' (291) and (294) we have

$$k - k' = n_0 - n_0'$$

279 *To find the index error* (n_0') *of the position circle* —This is the index error for the semi-lens II, with which we suppose all our observations to be made. Let the semi-lenses be separated to any assumed distance (by setting $m - a$ and $m' - a'$ to different readings), direct the telescope upon a *fixed* point, and revolve the objective until a motion of the telescope upon the hour axis (the declination circle being clamped) causes the two images of the fixed point to come successively into the sight line, that is, into the centre of the field of the ocular The position angle of the line joining the two images is then nearly $\pm$ 90°, but it will vary with the distance by which the semi-lenses are separated

If the hour circle is clamped and the objective is revolved until a motion of the telescope, upon the declination axis only, causes the images to come successively into the centre of the field, the position angle of the images will be nearly 0° or 180°, but will also vary with the distance of the centres of the semi-lenses The relation between the reading (n) of the position circle and the distance of the lenses will be investigated for each of these methods

In either method, I shall suppose that the sight line of the semi-lens I is made to coincide with the heliometer axis, which will be effected by setting the micrometers so that $m - a = 0$ and $\mu - \alpha = 0$

1st *When the telescope is revolved upon the hour axis* —It is obviously unnecessary to consider the position of the instrument with respect to the pole of the heavens, and we may therefore express the position of the heliometer axis by formulæ which give the *instrumental* hour angle and declination of the axis. In order to show the effect of flexure, let us return to the general formulæ (258), which, by omitting the terms $\gamma \cos(\tau - \vartheta)$ and

$\gamma \sin(\tau - \vartheta) \tan \delta$, will express the declination δ_1 and hour angle τ_1 of the heliometer axis referred to the pole of the instrument. Putting D for $d + \Delta d$ and T for $t + \Delta t$, and $i_1 = i - \varepsilon \sin \varphi$, we shall put

$$\delta_1 = D - e(\sin \varphi \cos D - \cos \varphi \sin D \cos T) \qquad = D + \Delta D$$
$$\tau_1 = T + c \sec D - i_1 \tan D + \varepsilon \cos \varphi \cos T + e \cos \varphi \sec D \sin T = T + \Delta T$$

in which φ will now denote the latitude of the instrument The equations (293), under the form given to them in Art 272, will now become

$$\begin{aligned} r \sin \delta &= \sin D + v \cos D + r \cos \delta \cos (T - \tau) \ \Delta D \\ r \cos \delta \cos (T - \tau) &= \cos D - v \sin D - r \sin \delta \ \Delta D + r \cos \delta \sin (T - \tau) \ \Delta T \\ r \cos \delta \sin (T - \tau) &= u - r \cos \delta \cos (T - \tau) \ \Delta T \end{aligned} \tag{317}$$

in which δ and τ are the declination and hour angle of the fixed point

In the revolution about the hour axis, D remains constant If the preceding equations are assumed for the case in which the image produced by the semi-lens I is in the sight line, and we distinguish by accents those quantities which vary when the second image is brought into the sight line, we shall have, since δ is fixed,

$$\begin{aligned} \sin \delta &= \frac{1}{r} \sin D + \frac{v}{r} \cos D + \cos \delta \cos (T - \tau) \ \Delta D \\ &= \frac{1}{r'} \sin D + \frac{v'}{r'} \cos D + \cos \delta \cos (T' - \tau) \ \Delta D' \end{aligned}$$

as the expression of the condition that the two images of the same point are successively brought into the sight line But, as we may neglect the products of the small quantities c, i_1, ε, e, by the squares and products of u, v, u', v', we can in the last terms put $\cos(T - \tau) = \cos(T' - \tau) = 1$, and then give the equation the form

$$\begin{aligned} \left(\frac{v'}{r'} - \frac{v}{r}\right) \cos D &= \left(\frac{1}{r} - \frac{1}{r'}\right) \sin D + \cos \delta \, (\Delta D - \Delta D') \\ &= \left(\frac{1}{r} - \frac{1}{r'}\right) \sin D + e \cos \varphi \sin D \cos \delta \, (\cos T - \cos T') \end{aligned}$$

From the second and third equations of (317) we have, with the degree of approximation here required,

$$\cos \delta \cos T = \cos D \cos \tau - v \sin D \cos \tau - u \sin \tau$$

and, therefore, also

$$\cos\delta\cos T' = \cos D\cos\tau - v'\sin D\cos\tau - u'\sin\tau$$

by means of which our equation becomes

$$\frac{v'}{r'} - \frac{v}{r} = \left(\frac{1}{r} - \frac{1}{r'}\right)\tan D + e\cos\varphi\tan D[(v'-v)\sin D\cos\tau + (u'-u)\sin\tau]$$

The mode of observation above proposed, by which we have $m - a = 0$ and $\mu - \alpha = 0$, leads to a simplification of this equation, for these conditions give also $f = 0$, and consequently, by (306), $u = v = 0$, and $r = \sqrt{(1 + uu + vv)} = 1$. We have also, by (308), under the same conditions,

$$u' = 2\tan\tfrac{1}{2}S\sin(n - k' + E)$$
$$v' = 2\tan\tfrac{1}{2}S\cos(n - k' + E)$$

and, consequently,

$$r' = 1 + \tfrac{1}{2}(u'u' + v'v') = 1 + 2\tan^2\tfrac{1}{2}S$$

Substituting these values, and neglecting terms of the order of $e\tan^2\frac{1}{2}S$, we deduce

$$\cos(n-k'+E) = \tan\tfrac{1}{2}S\tan D + e\cos\varphi\tan D[\sin D\cos\tau\cos(n-k'+E) + \sin\tau\sin(n-k'+E)]$$

from which it follows that $\cos(n - k' + E)$ is of the same order as $\tan\frac{1}{2}S$, and $n - k' + E$ is nearly $= \pm 90°$ We may, therefore, in the last term, put $\cos(n - k' + E) = 0$ and $\sin(n - k' + E) = \pm 1$, and write the equation in the following form:

$$\sin[90° \mp (n-k'+E)] = \tan\tfrac{1}{2}S\tan D \pm e\cos\varphi\tan D\sin\tau \quad (318)$$

We shall here have to distinguish between the cases in which $n - k'$ is nearly $= 90°$ or nearly $= -90°$ The angle E is nearly $= 0$ or nearly equal 180°, according as $m' - a'$ is positive or negative in (307). When $n - k'$ is nearly $= +90°$ and E is nearly $= 0$, we have $n - k' + E$ nearly $= +90°$, and the upper sign in the second member must be used Under the same conditions, the upper sign in the first member makes $90° - (n - k' + E)$ nearly $= 0$, and the angle may be put for its sine. When $n - k'$ is nearly $= +90°$ and E is nearly $= 180°$, the lower signs must be used Hence, if we write $\sin E$ for E or for $180° - E$, we shall have, when $n - k'$ is nearly $= +90°$,

$$\mp(n-k'-90°) - \sin E = \tan\tfrac{1}{2}S\tan D \pm e\cos\varphi\tan D\sin\tau \quad (318a)$$

and similarly, when $n - k'$ is nearly $= -90°$,

$$\pm(n - k' + 90°) + \sin E = \tan \tfrac{1}{2} S \tan D \mp e \cos \varphi \tan D \sin \tau \quad (318b)$$

The value of k', according to (294) and (290), when we refer λ to the pole of the instrument, is

$$k' = n_0' - i_1 \sec \delta_1 + c \tan \delta_1 + e \cos \varphi \tan \delta_1 \sin \tau_1$$

where the last term is equivalent to the last term of (318). If, therefore, we neglect this term in (318), the value of k', which the equations then determine, will be

$$= n_0' - i_1 \sec \delta_1 + c \tan \delta_1$$

If we suppose $k' - k$ and $b' - b$ to be known, we shall know E from (307), and a single observation will determine k' by (318) But it will be preferable always to combine two corresponding observations in which $m' - a' - m + a$ and $m_1' - a' - m + a$ are numerically equal but have opposite signs, then, n and n_1 being the readings of the position circle in the two observations, we shall have from their mean

$$n_0' - i_1 \sec \delta_1 + c \tan \delta_1 = \tfrac{1}{2}(n_1 + n) \mp 90° \quad (319)$$

If we set the micrometer at various readings in making these pairs of observations, and assume that the weight of the resulting determinations is proportional to $\frac{1}{2}(m_1' - m')$, and if we denote the several values of $\frac{1}{2}(m_1' - m')$ by M, M', M'', &c, and of $\frac{1}{2}(n_1 + n) \mp 90°$ by N, N', N'', &c, we shall have the final mean by the formula (see Appendix, Method of Least Squares)

$$(N) = \frac{MN + M'N' + M''N'' + \&c}{M + M' + M'' + \&c}$$

and then

$$n_0' - i_1 \sec \delta_1 + c \tan \delta_1 = (N)$$

To eliminate the terms involving i_1 and c, we take observations in the two opposite positions of the declination axis,—circle preceding and circle following,—and if (N) and (N') are the general means found in the two positions, we shall have

$$n_0' = \tfrac{1}{2}[(N) + (N')] \quad (320)$$

We see that the index error will be found independently of all

other quantities, by taking the mean of the readings in four observations, two in each position of the declination axis

2d. *When the telescope is revolved upon the declination axis*.—In this case T is constant and D varies. The condition that the two images are successively brought into the centre of the field will be expressed by equating the two values of $\cos\delta \sin(T-\tau)$ given by the last equation of (317). Putting $\cos(T-\tau) = 1$ in the last term of this equation, we find

$$\frac{u}{r} - \cos\delta \ \Delta T = \frac{u'}{r'} - \cos\delta \ \Delta T'$$

or, by the same method of observation as we employed above, making $f = 0$, and, consequently, also $u = v = 0$, and $r = 1$,

$$\begin{aligned} u' &= r' \cos\delta\,(\Delta T' - \Delta T) \\ &= r' \cos\delta\,[i_1(\tan D - \tan D') - (c + e\cos\varphi\sin T)(\sec D - \sec D')] \end{aligned}$$

which, with the same degree of approximation as was observed above, may be reduced to

$$u' = r'v'\,[i_1 \sec\delta - (c + e\cos\varphi\sin T)\tan\delta]$$

Substituting $\tan(n - k' + E)$ for $\frac{u'}{v'}$, and $r' = 1$ (which involves only errors of the order of $\tan^2 \frac{1}{2} S$ multiplied by i_1, c, e), we have

$$\tan(n - k' + E) = i_1 \sec\delta - (c + e\cos\varphi\sin T)\tan\delta$$

Hence $n - k' + E$ is very small or very nearly $= 180°$. When $n - k'$ is nearly $= 0$, we shall have, for the two cases of E,

$$n - k' \pm \sin E = i_1 \sec\delta - (c + e\cos\varphi\sin T)\tan\delta \qquad (321a)$$

and, when $n - k'$ is nearly $= 180°$,

$$n - k' \mp \sin E = i_1 \sec\delta - (c + e\cos\varphi\sin T)\tan\delta \qquad (321b)$$

If we omit all the terms in the second member, the value of k' which these equations determine will be that of n_0' itself. If, then, two observations are taken in which $m' - a' - m + a$ and $m_1' - a' - m + a$ are numerically equal but have opposite signs, and if n and n_1 are the two readings of the position circle, we shall have

$$n_0' = \tfrac{1}{2}(n_1 + n)$$

Regarding the weights of the several determinations thus made as proportional to the values of $\frac{1}{2}(m_1' - m')$, a general mean (N) will be found as above, and then we shall have $n_0' = (N)$.

280. From the preceding article it appears that by revolving the telescope upon the declination axis the index error of the position circle is found independently of all other quantities, and without reversing the declination axis We should expect, therefore, that when this method is followed in both positions of that axis—that is, both with circle preceding and with circle following—the same value of n_0' will be obtained BESSEL found, however, that this was by no means the case with the Konigsberg heliometer. for the difference of the resulting values was sometimes as great as 4′, which is too great a difference to be ascribed wholly to errors of observation He explains the discrepancy by supposing the telescope to have a tendency to revolve (so far as the elasticity of its materials will permit) about the point at which it is secured to the declination axis, a revolution which has the same effect upon the position angles as a revolution of the tube about the heliometer axis, and which is clearly to be distinguished from a flexure of the declination axis Supposing the amount of the revolution to be proportional to the force which tends to produce it, the law which it follows in all positions of the instrument is easily assigned, for this force is merely that part of the weight of the telescope which acts at right angles to a plane passing through the declination axis and the heliometer axis, and is, consequently, proportional to the cosine of the zenith distance of the point of the heavens towards which the perpendicular to this plane is directed. The hour angle of this point is the same as that of the heliometer axis $= \tau_1$, and its declination differs 90° from that of the heliometer axis $= 90° + \delta_1$ Denoting the zenith distance of the point by ζ, we shall have

$$\cos \zeta = \sin \varphi \cos \delta_1 - \cos \varphi \sin \delta_1 \cos \tau_1$$

and the amount of revolution will be expressed by $\psi \cos \zeta$, in which ψ is its maximum The observed position angles must be corrected by adding this quantity, or

$$\psi (\sin \varphi \cos \delta_1 - \cos \varphi \sin \delta_1 \cos \tau_1) \qquad (322)$$

which term must, therefore, be annexed to the formulæ for p in (314) and (315) *

281. *To find the index error* ($\varkappa$) *of the position circle of the ocular* — Set the semi-lens II at any assumed distance $= m' - a'$ from the heliometer axis, and the ocular at an equal distance $= \mu - \alpha$ from that axis Revolve the ocular about its axis until the image of a fixed point is seen in the centre of the field Let n and ν be the readings of the position circles of the objective and ocular. Without moving the telescope or changing n, repeat the observation with the distance $-(m' - a') = -(\mu - \alpha)$, and let ν' be the new reading of the position circle of the ocular. Then, $n - n_0'$ being the true direction of the line of motion of the semi-lens II, we have $\varkappa = \frac{1}{2}(\nu + \nu') - (n - n_0')$ It will be well to adjust the index of this circle so that its readings will agree with those of the position circle of the objective

For the fixed point in the preceding methods of determining the index error of the position circles, it will be expedient to employ the intersection of a cross thread in the focus of an auxiliary telescope, mounted in the observing room, with its objective turned towards the heliometer, the two threads of the cross making an angle of 45° with a declination circle

282 *To find the distance* (β) *of the line of motion of the ocular from the heliometer axis* —Set the ocular at an assumed distance $\mu - \alpha$ from the axis, and bring the image of a fixed point into the centre of the field Keeping the telescope fixed, set the ocular at a reading μ' such that $\mu' - \alpha = -(\mu - \alpha)$, and revolve it until the image is again seen in the centre of the field. Let ν and ν' be the readings of its position circle in the two positions, then we evidently have

$$\pm \beta = \frac{\mu - \mu'}{2} \tan \tfrac{1}{2}(180° - \nu + \nu') \tag{323}$$

It will be easy to adjust the ocular, by means of the proper adjusting screws, so that its line of motion passes through the heliometer axis, and thus make $\beta = 0$. A small error in this adjustment will have no sensible effect upon the observations, as our formulæ show

* See BESSEL's *Astron Untersuch*, Vol I pp 45, 72 In the latter place he finds for the Konigsberg heliometer ψ (which he there denotes by μ) $= 1'.914$.

283. Finally, the value of a revolution of the micrometer screw ($= R$) is to be determined with the utmost precision. Of the methods given in Chapter II for the filar micrometer, we may regard the following as the most suitable for the heliometer ·

1st By the measurement of the focal length of the lens and of the distance between two successive threads of the micrometer screw

2d By the Gaussian process, or the observation of a thread in the focus of the lens with a theodolite

3d By the measurement of a distance otherwise known, as, for example, the distance of two stars in the group *Pleiades* determined by meridian observations

By the third method, however, we cannot expect to reach the degree of accuracy which is necessary to give the heliometer all the advantage which it should possess as a *micrometer* This objection is obviated in a degree by measuring the successive distances between a number of stars which are nearly in the same great circle, and, having reduced these distances to the great circle joining the extreme stars, comparing the total reduced distance with the distance of the extreme stars as determined by meridian observations

Bessel, after a careful trial of all these methods with the Konigsberg heliometer, gave the preference to the first I must refer the reader to his elaborate researches upon this instrument (already referred to) for his very precise method of determining the focal length of the lens These researches include also some optical investigations of great elegance and importance

OBSERVATIONS UPON THE CUSPS OF THE SUN IN A SOLAR ECLIPSE

284 In the general discussion of eclipses in Vol I, I omitted to speak of the use that may be made of these observations in determining the corrections of the elements of the eclipse The omission may be appropriately supplied here in connection with the heliometer, with which the observations are most accurately made

Fig 60

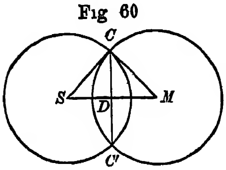

Let M and S (Fig. 60) be the *apparent* places of the centres of the moon and sun, CC' the common chord of the intersecting discs The observation consists in measuring the distance of the cusps C, C', and the position angle of CC' with reference to the circle of declination drawn to its middle point. This distance, as well as

the position angle, will be affected by refraction, the correction for which will be investigated hereafter Let s and p here denote the distance and position angle deduced from the observation by the formulæ above given for the heliometer, and also corrected for refraction

The local time of each measure must be accurately known For this time, let the parallaxes of the two bodies in right ascension and declination be computed (by Vol I Art 98), and let α and α' denote the resulting apparent right ascensions of the moon and sun respectively, δ and δ' their apparent declinations. Let σ denote the apparent distance of the centres $= SM$, and π the position angle of SM with reference to a circle of declination drawn through its middle point, reckoning this angle from the moon towards the sun We have, with sufficient accuracy,

$$\left.\begin{aligned} \sigma \sin \pi &= (\alpha' - \alpha) \cos \tfrac{1}{2}(\delta' + \delta) \\ \sigma \cos \pi &= \delta' - \delta \end{aligned}\right\} \quad (324)$$

which determine σ and π

For the same time, the apparent semidiameters of the moon and sun, which we shall denote by S and S' respectively, will be computed by Vol I Art 131 We then have given the three sides of the triangle SCM, and, denoting the angles at M and S by μ and μ', we may find these angles by the usual formulæ of plane trigonometry, or by the following formulæ, which in the present case are somewhat more convenient

$$\left.\begin{aligned} \tfrac{1}{2}(S \cos \mu + S' \cos \mu') &= \tfrac{1}{2}\sigma \\ \tfrac{1}{2}(S \cos \mu - S' \cos \mu') &= \frac{(S + S')(S - S')}{2\sigma} = A \end{aligned}\right\} \quad (325)$$

With either of these angles and the value of S or S', we can compute the value of CC' Let this *computed* value of CC' be denoted by s'; we have

$$s' = 2S \sin \mu = 2S' \sin \mu' \quad (326)$$

The difference between this computed value and the observed value s will determine the corrections which the elements of the eclipse require in order to satisfy the observation Put $s = s' + ds'$ Differentiating (326), we find

$$ds' = 2S \cos \mu \; d\mu + 2 \sin \mu \; dS$$

and from the formula

$$2S\sigma \cos \mu = \sigma^2 + S^2 - S'^2$$

we find

$$-S\sigma \sin \mu \, d\mu = (\sigma - S \cos \mu)\, d\sigma + (S - \sigma \cos \mu)\, dS - S' dS'$$

whence, with the aid of the known relations between the parts of the plane triangle, we readily find

$$\frac{2S}{\sigma \tan \mu'} dS + \frac{2S}{\sigma \tan \mu} dS' - \frac{2S \cos \mu}{\sigma \tan \mu'} d\sigma = s - s'$$

But, since $d\sigma$ varies with π, we must replace it by corrections which will have the same value in all the equations of condition thus formed By putting

$$\begin{aligned} \sigma \sin \pi &= (\alpha' - \alpha) \cos \tfrac{1}{2} (\delta' + \delta) = x \\ \sigma \cos \pi &= \delta' - \delta \qquad\qquad\qquad\quad = y \end{aligned}$$

we shall find

$$d\sigma = dx \ \sin \pi + dy \ \cos \pi$$

in which

$$\begin{aligned} dx &= \cos \tfrac{1}{2} (\delta' + \delta) \ \ d(\alpha' - \alpha) \\ dy &= d(\delta' - \delta) \end{aligned}$$

and we may regard $d(\alpha' - \alpha)$ and $d(\delta' - \delta)$, and, consequently, also dx and dy, as constant for the duration of the eclipse We then have

$$\frac{2S}{\sigma \tan \mu'} dS + \frac{2S'}{\sigma \tan \mu} dS' - \frac{2S \cos \mu}{\sigma \tan \mu'} \sin \pi \, dx - \frac{2S \cos \mu}{\sigma \tan \mu'} \cos \pi \, dy = s - s' \tag{327}$$

This will be the final form of our equations of condition if the distance s is fully corrected for the instrumental errors. If, however, the zero of the micrometer is uncertain, we should make observations on opposite sides of the zero, (with the heliometer, by placing the movable semi-lens alternately in opposite positions with respect to the stationary one,) and if c is the unknown error of the micrometer zero, we must write $s \pm c$ for s in the above equation, taking $s + c$ for one series of observations and $s - c$ for the other The resolution of all the equations of condition by the method of least squares will then determine dS, dS', dx, dy, and c.

It will usually, however, be inexpedient to retain dS', as its coefficient will differ very little from that of dS. The value of the sun's semidiameter is now so well determined that in discussions of this kind it will be quite allowable to put $dS' = 0$

We may also form equations of condition from the position angles. The angle π is formed by SM and a circle of declination drawn to the middle point of SM, while p is formed at the point D Denoting the middle point of SM by E, we have $DE = \frac{1}{2}\sigma - S'\cos\mu' = \frac{1}{2}(S\cos\mu - S'\cos\mu') = A$; and we can now compute the position angle of CC' at the point D from the known parts of the triangle formed by the points D, E, and the pole Let p' denote this computed value, we readily find

$$p' = \pi - 90° + A \sin\pi \tan\tfrac{1}{2}(\delta' + \delta) \tag{328}$$

Putting the observed value $p = p' + dp'$, we have, by neglecting the insensible variations of the last term of (328), $dp' = d\pi$, and, consequently,

$$\frac{\cos\pi\, dx}{\sigma \sin 1'} - \frac{\sin\pi\, dy}{\sigma \sin 1'} = p - p' \tag{329}$$

where dx, dy, and σ are expressed in seconds and dp' in minutes. From all the equations thus formed, we can find dx and dy, or we can combine all the equations of the forms (327) and (329) in a single discussion We see that the corrections of the semidiameters cannot be determined from the position angles alone

When the observations are made with the heliometer, each must be a *single* observation, for the chord s changes so rapidly that we cannot combine two opposite observations, as has been supposed in Art 275. We must, therefore, reduce each observation by the general formula (311), in which, however, we may make $f = 0$, by making all the contacts in the heliometer axis or middle of the field The angle E in these formulæ must then be known; but if it has not been determined with certainty, we may introduce it into our equations of condition as an additional unknown quantity For one series of observations, we must write $p + E$ in the place of p in (329), and for the other series, in opposite positions of the semi-lenses, we must write $p - E$ in the place of E But, as E varies inversely with the distance s, it will be necessary to put

$$E = \frac{\gamma}{s \sin 1'}$$

in which γ is a constant which will be expressed in seconds, since s is in seconds and E in minutes The equation (329) may then be put under the form*

$$\frac{s}{c}\cos\pi\, dx - \frac{s}{\sigma}\sin\pi\, dy \mp \gamma = s\sin(p - p') \qquad (329^*)$$

For some observations of the cusps of the solar eclipse of July 28, 1851, made with the heliometer of the Konigsberg Observatory and reduced by the preceding method by the Director WICHMANN, see *Astron Nach*, Vol XXXIII p 309

THE RING MICROMETER

285 This is simply a thin metallic ring, exactly circular, placed in the focus of the objective, with its plane at right angles to the optical axis From the times of transit of two stars across its edge, the telescope remaining fixed throughout the observation, we can find both the difference of right ascension and the difference of declination of the stars Although inferior in accuracy to the filar micrometer and the heliometer, it possesses the advantage over the former of not requiring illumination, and over both in not requiring an equatorial mounting of the telescope

Let $ABB'A'$ represent the inner edge of the ring. Denote by t_1 and t_2 the observed sidereal times of ingress and egress of a star at the points A and B; by t_1' and t_2' the same for a star observed at A' and B' Upon the supposition that the paths of the stars across the field are rectilinear, the straight line CMM', drawn from the centre C of the ring perpendicular to the chords AB and $A'B'$, will coincide with the declination circle of the point C The time of the transit of the first star over this circle is the arithmetical mean of the times t_1 and $t_2 = \frac{1}{2}(t_1 + t_2)$, that of the transit of the second star over the same circle is $\frac{1}{2}(t_1' + t_2')$, and, hence, if α and α' are the right ascensions of the stars, we have

Fig 61.

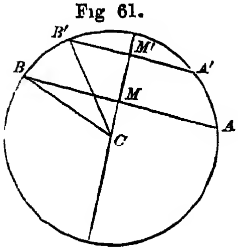

$$\alpha' - \alpha = \tfrac{1}{2}(t_1' + t_2') - \tfrac{1}{2}(t_1 + t_2) \qquad (330)$$

* By (307), we perceive that γ is here the value of the quantity $(m - a)(k - k') + b' - b$ expressed in seconds, and by putting its value found from the discussion of the equations (329) in the second member of (316), and also the true value of $m - a$ found from the value of c by (327), we shall have an equation for determining $k - k'$ and $b' - b$

Let r denote the radius of the ring expressed in seconds of arc, δ and δ' the declinations of the stars, and put

$$\begin{array}{ll} \tau = t_2 - t_1 & \tau' = t_2' - t_1' \\ \gamma = BCM & \gamma' = B'CM' \\ d = MC & d' = M'C \\ \mu = BM & \mu' = B'M' \end{array}$$

then we have

$$\left.\begin{array}{ll} \mu = \frac{15}{2}\tau \cos \delta & \mu' = \frac{15}{2}\tau' \cos \delta' \\ \sin \gamma = \frac{\mu}{r} & \sin \gamma' = \frac{\mu'}{r} \\ d = r \cos \gamma & d' = r \cos \gamma' \end{array}\right\} \quad (331)$$

and hence the difference of declination of the stars:

$$\delta' - \delta = d' - d \quad (332)$$

The signs of $\cos \gamma$ and $\cos \gamma'$ are not determined by the second equations of (331); consequently, either sign may be used in computing d or d'. To remove the ambiguity, it is necessary that the observer note the positions of the stars with respect to the centre of the ring; then d or d' will be *positive* when the star passes *north* and *negative* when *south* of the centre.

Example *—On the 11th of April, 1848, at the Observatory of Bilk, the planet Flora and a neighboring star were compared by a ring micrometer of a six feet refractor. The observed sidereal times were as follows

Flora (N. of centre)	Star (N. of centre)
$t_1' = 11^h\ 16^m\ 35^s.0$	$t_1 = 11^h\ 17^m\ 53^s.0$
$t_2' = 11\ \ 17\ \ 25\ .5$	$t_2 = 11\ \ 19\ \ 46\ .5$
$\tau' = \qquad 50\ .5$	$\tau = \qquad 1\ \ 53\ .5$

The approximate declination of Flora was $\delta' = +24° 5'.4$. The apparent place of the star was

$$\begin{array}{l} \alpha = \quad 6^h\ 4^m\ 51^s.93 \\ \delta = +24°\ 1'\ \ 9''.01 \end{array}$$

The radius of the ring was $r = 1126''.25$, and hence

* Brünnow's Sphärische Astronomie, p. 546.

$\log \tau'$	1 70329	$\log \tau$	2 05500
$\log \cos \delta'$	9 96043	$\log \cos \delta$	9 96067
$\log \mu'$	2 53878	$\log \mu$	2 89073
$\log \sin \gamma'$	9 48715	$\log \sin \gamma$	9 83910
$\log \cos \gamma'$	9 97850	$\log \cos \gamma$	9 85940
$\log d'$	3 03013	$\log d$	2 91103
$d' = +17' \, 51'' \, 9$		$d = +13' \, 34'' \, 8$	

The planet and star being both observed on the north side of the centre of the field, d' and d are both positive, and hence

$$\delta' - \delta = d' - d = + 4' \, 17'' \, 1$$

For the times of transit over the declination circle of the middle of the field, we have

$$\begin{array}{lrl} \text{Flora,} & \frac{1}{2}(t_1' + t_2') = & 11^h \; 17^m \;\; 0^s \, 25 \\ \text{Star,} & \frac{1}{2}(t_1 + t_2) = & 11 \;\; 18 \;\; 49 \;\; 75 \\ & \alpha' - \alpha = & - \;\; 1 \;\; 49 \;\; 50 \end{array}$$

Hence we have for the planet

$$\begin{aligned} \alpha' &= \quad 6^h \; 3^m \; 2^s \, 43 \\ \delta' &= + 24° \; 5' \; 26'' \, 1 \end{aligned}$$

which values express the planet's apparent place at the time of its passage over the declination circle of the middle of the field, that is, at the sidereal time $11^h \, 17^m \, 0^s \, 25$ But the effect of refraction has not yet been allowed for See Art 300

286 *Correction for curvature* —The correction which the preceding method requires, in consequence of the curvature of the paths of the stars, may be found as follows In the spherical triangle of which the three angular points are the pole, the centre of the ring, and the point where the star enters or leaves the ring, we have

$$\sin \delta = \sin D \cos r + \cos D \sin r \cos \gamma$$

where D is the declination of the centre of the ring For the second star, we have

$$\sin \delta' = \sin D \cos r + \cos D \sin r \cos \gamma'$$

and the difference of these equations gives

$$2 \sin \tfrac{1}{2}(\delta' - \delta) \cos \tfrac{1}{2}(\delta' + \delta) = (\sin r \cos \gamma' - \sin r \cos \gamma) \cos D$$

or, very nearly,

$$(\delta' - \delta) \cos \tfrac{1}{2} (\delta' + \delta) = (r \cos \gamma' - r \cos \gamma) \cos D$$
$$= (d' - d) \cos D$$

in which $d' - d$ is the approximate difference found by the preceding article But we have, very nearly,

$$D = \delta - d \qquad\qquad D = \delta' - d'$$

the mean of which is

$$D = \tfrac{1}{2}(\delta' + \delta) - \tfrac{1}{2}(d' + d)$$

and we may, therefore, put

$$\cos D = \cos \tfrac{1}{2} (\delta' + \delta) + \tfrac{1}{2} (d' + d) \sin 1'' \sin \tfrac{1}{2} (\delta' + \delta)$$

so that we obtain

$$\delta' - \delta = d' - d + \tfrac{1}{2} (d' + d)\ (d' - d) \sin 1'' \tan \tfrac{1}{2} (\delta' + \delta) \quad (333)$$

Hence, the correction of the difference of declination found upon the supposition that the path of the star is rectilinear, is

$$+ \tfrac{1}{2} (d' + d)\ (d' - d) \sin 1'' \tan \tfrac{1}{2} (\delta' + \delta)$$

The correction disappears when d' and d are numerically equal, that is, when the stars are observed at equal distances from the centre of the ring

In the example of the preceding article, this correction amounts to $+ 0''.52$, and the corrected difference of declination is

$$\delta' - \delta = + 4' \, 17'' 62$$

287 If the outer edge of the ring is also an exact circle, it may be used in the same manner as the inner edge. Let the four transits of a star over the edges of both rings be observed at the times t_1, t_2, t_3, t_4, then, if r is the radius of the outer ring, r_1 that of the inner ring, we put

$$\mu = \tfrac{15}{2} (t_4 - t_1) \cos \delta \qquad\qquad \mu_1 = \tfrac{15}{2} (t_3 - t_2) \cos \delta$$

$$\sin \gamma = \frac{\mu}{r} \qquad\qquad \sin \gamma_1 = \frac{\mu_1}{r_1}$$

so that with the outer ring we find

$$d = r \cos \gamma$$

and with the inner ring,

$$d = r_1 \cos \gamma_1$$

and the mean of these values will be taken as the true value of d. In the same manner d' for the second star will be found, after which $\delta' - \delta = d' - d$

But when the four observations have been obtained, the process of reduction may be slightly abridged, as follows.*

The sum and difference of the values of d^2 give

$$d^2 = \tfrac{1}{2}[r^2 + r_1^2 - (\mu^2 + \mu_1^2)]$$
$$r^2 - r_1^2 = \mu^2 - \mu_1^2$$

Putting

$$\left.\begin{array}{c} a = \dfrac{r + r_1}{2} \\ \sin A = \dfrac{\mu + \mu_1}{2a} \qquad \sin B = \dfrac{\mu - \mu_1}{2a} \end{array}\right\} \quad (334)$$

we find

$$r - r_1 = \frac{\mu^2 - \mu_1^2}{2a} = 2a \sin A \sin B$$
$$r^2 + r_1^2 = 2a^2 (1 + \sin^2 A \sin^2 B)$$
$$\mu^2 + \mu_1^2 = 2a^2 (\sin^2 A + \sin^2 B)$$

which, substituted in the above value of d^2, give

$$d^2 = a^2 \cos^2 A \cos^2 B$$

or

$$d = a \cos A \cos B \qquad (335)$$

so that, A and B being found by (334), d is found by (335). The formulæ (334) for determining A and B may also be written as follows:

$$\sin A = \frac{15(\tau + \tau_1)\cos\delta}{4a} \qquad \sin B = \frac{15(\tau - \tau_1)\cos\delta}{4a}$$

in which $\tau = t_4 - t_1$ and $\tau_1 = t_3 - t_2$

EXAMPLE.—On the 24th of June, 1850, at the Observatory of Bilk, PETERSEN'S comet and a star were observed with a double-ring micrometer, as follows:

Comet (N. of centre)		Star (S. of centre)	
t_1'	$18^h\ 15^m\ 54^s$	t_1	$18^h\ 18^m\ 55^s.3$
t_2'	16 20	t_2	19 13
t_3'	17 21	t_3	21 20.5
t_4'	17 48	t_4	21 37.5

* BRÜNNOW's Sphärische Astronomie, p. 549.

The approximate declination of the comet was $\delta' = +\,59^\circ\,20'$, and the apparent place of the star was

$$\alpha = 14^h\,53^m\,30^s\,75 \qquad \delta = +\,59^\circ\,7'\,12''\,19$$

The radii of the rings were—

$$\text{Outer,}\quad r = 11'\,21''\,09$$
$$\text{Inner,}\quad r_1 = 9\ \ 26\ \ 29$$

whence

$$a = 10\ \ 23\ \ 69$$

Then we find

Comet		Star	
τ'	$1^m\,54^s\,0$	τ	$2^m\,42^s\,2$
τ_1'	1 1 0	τ_1	2 7 5
$\log(\tau' + \tau_1')$	2 24304	$\log(\tau + \tau_1)$	2 46195
$\log(\tau' - \tau_1')$	1 72428	$\log(\tau - \tau_1)$	1 54033
$\log \dfrac{15 \cos \delta'}{4a}$	7 48667	$\log \dfrac{15 \cos \delta}{4a}$	7 48938
$\log \sin A'$	9 72971	$\log \sin A$	9 95133
$\log \sin B'$	9 21095	$\log \sin B$	9 02971
$\log \cos A'$	9 92623	$\log \cos A$	9 65137
$\log \cos B'$	9 99419	$\log \cos B$	9 99750
$\log d'$	2 71539	$\log d$	2 44384
$d' =$	$+\,8'\,39''\,27$	$d =$	$-\,4'\,37''\,87$

$$d' - d = +\,13'\,17''\,14$$

and for the difference of right ascension,

$$\alpha' - \alpha = -\,3^m\,25^s\,83$$

288 *To find the correction for the proper motion of one of the objects* —The most common application of the ring micrometer is to the determination of the difference of right ascensions and declinations of a star, and a planet, or comet But since a planet (or comet) changes both its right ascension and declination during the time of an observation, its path will not be at right angles to the declination circle drawn through the centre of the ring so that the differences found by the preceding methods will require a correction

Fig 62

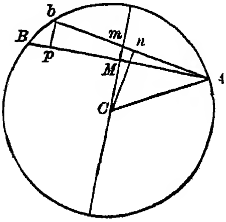

Let Ab, Fig 62, be the path of the planet across the ring, Cm the declination circle through C, the centre of the ring Draw AB perpendicular to Cm, Cn perpendicular to Ab, bp perpendicular to AB Put

$\Delta\alpha'$ = the increase of the planet's right ascension in one sidereal second,

$\Delta\delta'$ = the increase of the declination in one sid second,

t_1', t_2' = the sid times of ingress and egress of the planet at A and b,

$\tau' = t_2' - t_1'$,

x = the correction of the mean of t_1' and t_2', or of the right ascension of the planet found by the preceding methods,

$\frac{1}{2}(t_1' + t_2') + x$ = the sid time of the planet's transit at m,

β = the angle $BAb = mCn$

The arc bp may be regarded as a portion of the declination circle drawn through b The angle at the pole included by this circle and the declination circle of A is the hour angle described by the planet in the time τ', which hour angle is $\tau' - \tau' \, . \, \Delta\alpha' = \tau'(1 - \Delta\alpha')$. Hence we have, very nearly,

$$Ap = 15\,\tau'(1 - \Delta\alpha') \cos \delta'$$

We have, also,

$$bp = \tau' \, \Delta\delta'$$

whence

$$\tan \beta = \frac{\Delta\delta'}{15 \cos \delta' (1 - \Delta\alpha')}$$

or, since the squares of $\Delta\delta'$ and $\Delta\alpha'$ or their product may be neglected,

$$\tan \beta = \frac{\Delta\delta'}{15 \cos \delta'}$$

The correction x is the time in which the planet describes the line nm, and this time is found by the proportion

$$\tau' : x = Ab : nm = Ab : Cn \tan \beta$$

for which we can take

$$\tau' : x = 15\,\tau' \cos \delta' : d' \tan \beta$$

whence, substituting the value of $\tan \beta$,

$$x = \frac{d' \, \Delta\delta'}{(15 \cos \delta')^2} \tag{336}$$

Since $Ab = Ap \sec \beta$, and $\sec \beta$ differs from unity only by terms involving $(\Delta\delta')^2$, we may take $Ab = Ap$, and hence

$$An = \tfrac{1}{2} Ap = \frac{15\,\tau' \cos \delta'}{2} (1 - \Delta\alpha') = \mu' (1 - \Delta\alpha')$$

so that to compute $d' = Cn$ in this case we have

$$\sin\gamma' = \frac{\mu'}{r}(1 - \Delta\alpha') \qquad d' = r\cos\gamma' \qquad (337)$$

that is, the computation by the preceding methods will give the value of d', corrected for the proper motion, if we employ $\mu'(1 - \Delta\alpha')$ instead of μ' In the method of Article 287, with a double-ring micrometer, the logarithm of $1 - \Delta\alpha'$ may be added to the logarithm of $\frac{15\cos\delta'}{4a}$.

EXAMPLE.—In the example of the preceding article the comet's motion in one mean day was, in right ascension $-5^m\ 0^s$, and in declination $-1°\ 17'$; and therefore, since one mean day contains 86636 sidereal seconds,*

$$\Delta\alpha' = -\frac{300^s}{86636} \qquad \log(1 - \Delta\alpha') = 0\ 00150$$

$$\Delta\delta' = -\frac{4620''}{86636} \qquad \log\Delta\delta' = n8\ 72694$$

Hence, in the computation of d' we have

$$\begin{array}{rl}
\log\frac{15\cos\delta'}{4a}(1 - \Delta\alpha') & 7\ 48817 \\
\log\sin A' & 9\ 73121 \\
\log\sin B' & 9\ 21245 \\
\log\cos A' & 9\ 92563 \\
\log\cos B' & 9\ 99415 \\
\log d' & 2\ 71475 \\
d' = & +8'\ 38''\ 50
\end{array}$$

* The logarithm of $1 - \Delta\alpha'$ may be found at once from the change of right ascension in 48 hours, as follows Let this change be expressed in *minutes of arc*, and denoted by $(\Delta\alpha')$, then we have

$$\Delta\alpha' = \frac{(\Delta\alpha')\times 60}{15\times 2\times 86636} = \frac{(\Delta\alpha')}{43318}$$

But if M is the modulus of common logarithms, we have from the development of $\log(1 - \Delta\alpha')$ in series, by neglecting the second and higher powers of $\Delta\alpha'$,

$$\log(1 - \Delta\alpha') = -M\Delta\alpha' = -\frac{0\ 43429\,(\Delta\alpha')}{43318}$$

or, very nearly,

$$\log(1 - \Delta\alpha') = -0\ 00001\,(\Delta\alpha')$$

Hence, to correct for the proper motion in the computation of d, subtract from the logarithm of μ' as many units of the 5th decimal place as there are minutes of arc in the 48 hour increase of right ascension

and, therefore,

$$d' - d = + 13' 16''.37$$

By (336) we find

$$x = \quad - \quad 0^s.47$$

whence

$$\alpha' - \alpha = - \quad 3^m 26^s.30$$

The correction of $d' - d$ for the curvature of the path is, in this case, by (333), $+ 0''.78$, whence

$$\delta' - \delta = + 13' 17''.15$$

so that the corrections for curvature and proper motion here, accidentally, almost destroy each other

The apparent place of the comet (still affected, however, by parallax and planetary aberration, as well as the differential refraction) is, therefore,

$$\alpha' = \quad 14^h\, 50^m\, 4^s.45$$
$$\delta' = + 59° 20' 29''.34$$

at the sidereal time $18^h\, 16^m\, 50^s.75$.

289 It is yet to be shown under what conditions errors of observation or of the data will have the least effect upon the results obtained with the ring micrometer For the effect of an error $\Delta\tau$ in the observed interval, we have, by differentiating (331),

$$\Delta\gamma = \frac{15 \cos \delta \;\; \Delta\tau}{2r \cos \gamma}$$

$$\Delta d = - r \sin \gamma \;\; \Delta\gamma = - \tfrac{15}{2} \cos \delta \tan \gamma \;\; \Delta\tau$$

which shows that the error in the observed time produces the least effect upon d when $\tan \gamma$ is least, and, therefore, for the most accurate determination of the declination, the chords described by the two stars should be as far from the centre of the ring as possible, or the difference of declination should be but little less than the diameter of the ring If d is not much less than r, it will be advisable to let the stars pass across the field on opposite sides of the centre, at nearly equal distances from it But if d is very small, both stars should pass as far from the centre as possible, on the same side of it.

For the effect of an error in r, we have

$$\Delta d = \frac{r}{d} \Delta r = \Delta r \;\; \sec \gamma$$

which is also least when the star is farthest from the centre of the field

For the second star, we have also $\Delta d' = \Delta r \sec \gamma'$, and hence

$$\Delta (d' - d) = \Delta r (\sec \gamma' - \sec \gamma)$$

so that if the stars are on the same parallel of declination (when $\gamma = \gamma'$) the error in r has no effect upon the computed difference of declination, as, indeed, is otherwise evident

For the accurate determination of the difference of right ascension, it is plain that the stars should pass as near to the centre of the field as possible, since the immersions and emersions can then be most accurately observed.

290. *To find the radius of the ring —First Method* —Observe the transits of the sun's limb over the edge of the ring. Four contacts will be observed, the sun's centre being at the points a, b, c, d (Fig 63) at the times t_1, t_2, t_3, t_4 If the radius of the ring is denoted by r and the sun's semidiameter by R, we see that the external contacts (at a and d) are observed at the times at which the transit of the sun's centre would be observed over a ring whose radius was $r + R$; while the internal contacts (at b and c) are observed at the times at which the transit of the sun's centre would be observed over a ring whose radius was $r - R$. Hence, putting δ = sun's declination, and

Fig 63

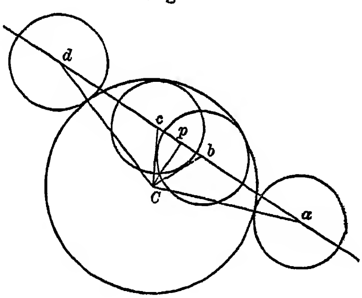

$$\tau = t_4 - t_1 \qquad \tau' = t_3 - t_2$$

we have, by Art. 285, from the external contacts,

$$2 (r + R) \sin \gamma = 15 \tau \cos \delta$$
$$2 (r + R) \cos \gamma = 2 d$$

and from the inner contacts,

$$2 (r - R) \sin \gamma' = 15 \tau' \cos \delta$$
$$2 (r - R) \cos \gamma' = 2 d$$

Eliminating γ and γ', we have

$$4(r+R)^2 = (15\,\tau\cos\delta)^2 + 4\,d^2$$
$$4(r-R)^2 = (15\,\tau'\cos\delta)^2 + 4\,d^2$$

and eliminating d^2, we obtain

$$r = \frac{(15\cos\delta)^2(\tau+\tau')(\tau-\tau')}{16\,R} \tag{338}$$

In order to take into account the sun's motion in right ascension, the intervals τ and τ' should be expressed in apparent time.

It is easy to see that the formula (338) will still be applicable when the sun's diameter is greater than that of the ring

EXAMPLE *—The sun was observed with a ring micrometer at the Observatory of Bilk as follows

External Contacts	Internal Contacts
$t_1 = 10^h\,31^m\,8^s\,2$ Sid time	$t_2 = 10^h\,32^m\,30^s\,8$
$t_4 = 10\;\;34\;\;47\;5$	$t_3 = 10\;\;33\;\;25\;3$

The sun's declination was $\delta = +\,23°\,14'\,50''$, the semidiameter $R = 15'\,45''\,07$, and the sun's motion in right ascension was $4^m\,8^s\,7$ in one day.

The sidereal intervals $3^m\,39^s\,3$ and $54^s\,5$ must be reduced to intervals of apparent time by multiplying them by the factor

$$1 - \frac{248\;7}{86636} = 0\;99713$$

whence

$$\tau = 218^s\,67 \qquad \tau' = 54^s\,34$$

and hence, by (338),

$$r = 9'\,23''\,57$$

Second Method—Observe the transits of two stars the difference of whose declinations is accurately known Then, τ and τ' being, as before, the intervals between the ingress and egress of the two stars respectively, we have

$$\mu = \tfrac{15}{2}\,\tau\cos\delta = r\sin\gamma \qquad d = \pm\, r\cos\gamma$$
$$\mu' = \tfrac{15}{2}\,\tau'\cos\delta' = r\sin\gamma' \qquad d' = \pm\, r\cos\gamma'$$

Since for determining r it will always be advisable to select a

* BRUNNOW, Spharische Astronomie, p 561

pair of stars whose difference of declination is not much less than the diameter of the ring, the stars will be observed on opposite sides of the centre we shall, therefore, have

$$d' - d = r\,(\cos\gamma + \cos\gamma')$$

Let A and B be assumed, so that

$$A = \tfrac{1}{2}(\gamma' + \gamma) \qquad B = \tfrac{1}{2}(\gamma' - \gamma)$$

then

$$\begin{aligned} d' - d &= r\,[\cos(A+B) + \cos(A-B)] = 2r\cos A\cos B \\ \mu' + \mu &= r\,[\sin(A+B) + \sin(A-B)] = 2r\sin A\cos B \\ \mu' - \mu &= r\,[\sin(A+B) - \sin(A-B)] = 2r\cos A\sin B \end{aligned}$$

Hence we derive

$$\left.\begin{aligned} \tan A = \frac{\mu'+\mu}{d'-d} \qquad \tan B = \frac{\mu'-\mu}{d'-d} \\ r = \frac{d'-d}{2\cos A\cos B} \end{aligned}\right\} \quad (339)$$

We may also use any one of the following forms for r

$$r = \frac{\mu'+\mu}{2\sin A\cos B} = \frac{\mu'-\mu}{2\cos A\sin B} = \frac{\mu'}{\sin(A+B)} = \frac{\mu}{\sin(A-B)}$$

In order to render this method exact, the atmospheric refraction should be taken into account Its effect upon micrometric observations in general will be considered hereafter, but, since for determining the radius of the ring micrometer it will be advisable to take the observations near the meridian, the refraction may be allowed for in a very simple manner, for we may then neglect its effect upon the right ascensions of the stars The effect upon the declinations is found by the formulæ (234) and (20) of Vol I, according to which, if δ and δ' are the true declinations, the apparent values are

$$\begin{aligned} &\delta + k'\cot(\delta + N) \\ &\delta' + k'\cot(\delta' + N) \end{aligned}$$

where $\tan N = \cot\varphi\cos\tau_0$, φ being the latitude of the place of observation, and τ_0 the hour angle of the centre of the ring. Hence the apparent difference of declination, which we will denote by $(\delta' - \delta)$,

$$(\delta' - \delta) = \delta' - \delta - \frac{k'\sin(\delta' - \delta)}{\sin(\delta + N)\sin(\delta' + N)}$$

for which we may take

$$(\delta' - \delta) = \delta' - \delta - \frac{k' \sin(\delta' - \delta)}{\sin^2[\frac{1}{2}(\delta + \delta') + N]} \qquad (340)$$

which is to be used for $d' - d$ in (339) It will here generally suffice to take $k' = 57''$, but it may be accurately found by Column B of Table II.

When the stars are not very near the equator, the correction for curvature must be applied If r were given, the observations, computed upon the supposition that the paths of the stars are rectilinear, would give the approximate difference $d' - d$, and hence in the inverse process we have only to use $d' - d$ instead of $(\delta' - \delta)$ in order to obtain the true value of r Now, by (333),

$$d' - d = (\delta' - \delta) - \tfrac{1}{2} \sin 1'' (d'^2 - d^2) \tan \tfrac{1}{2}(\delta' + \delta)$$

or, since $d'^2 - d^2 = -(\mu'^2 - \mu^2)$,

$$d' - d = (\delta' - \delta) + \tfrac{1}{2} \sin 1'' (\mu' + \mu)(\mu' - \mu) \tan \tfrac{1}{2}(\delta' + \delta) \qquad (341)$$

in which $(\delta' - \delta)$ is the difference of declination corrected for refraction

EXAMPLE —The radius of the ring of the micrometer employed in the example of Art 285 was determined by the stars *Asterope* and *Merope* of the *Pleiades*, the declinations of which were

$$\delta' = +24° 4' 24''26 \qquad \delta = +23° 28' 6''85$$

and the observed intervals were

$$\tau' = 18^s 5 \qquad \tau = 56^s 2$$

In order to illustrate the use of (340), let us suppose the hour angle of the centre of the ring to have been $\tau_0 = 1^h = 15°$, then, the latitude of Bilk being $\varphi = +51° 12' 25''$, we find

$N =$	$37° 49' 6$	$\log k' = \log 57''$	1 7559
$\frac{1}{2}(\delta + \delta') + N =$	$61 \quad 35 \quad 9$	$\log \operatorname{cosec}^2 [\frac{1}{2}(\delta + \delta') + N]$	0 1114
$\delta' - \delta =$	$36' 17'' 41$	$\log \sin(\delta' - \delta)$	8 0235
corr	$-\; 0 \quad 78$	log corr	$n9$ 8908
$(\delta' - \delta) =$	$36' 16'' 63$		

We find, in the next place,

$$\mu' = 126'' 68 \qquad \mu = 386''.63$$

$$\log(\mu' + \mu) = 2\;71038 \qquad \log(\mu' - \mu) = n2\;41489$$

whence the correction for curvature is, by (341), $= -0''.14$, and therefore

$$d' - d = 36'\ 16''.48$$

with which we now find, by (339),

$\log \tan A = 9.37263$		$\log \tan B = 9.07714$	
	$\log \sec A$	0.01175	
	$\log \sec B$	0.00308	
	$\log (d'-d)$	3.33775	
	$\log 2r$	3.35258	
		$r = 18'\ 46''.03$	

Third Method.—Direct the telescope of a theodolite towards the objective of the telescope which carries the micrometer, and measure directly the angular diameter of the ring by either the vertical or the horizontal circle of the theodolite, as in the case of the filar micrometer, Art. 46.*

291. The filar micrometer, the heliometer, and the ring micrometer are now almost the only micrometers in use. I will, therefore, here only briefly mention two or three others, as it is not within the plan of this work to enter upon the history of the numerous instruments of this class which have been proposed.

The duplication of the images of objects, which is effected in the heliometer by dividing the objective, has also been effected by dividing the ocular, constituting what has been known as the *double-image eye-piece micrometer*. The principle of this instrument is identical with that of RAMSDEN'S Dynameter, which is still used for measuring the magnifying power of telescopes (Art. 13). It is evident that by separating the two halves of a simple eye-lens until the image of one star coincides with that of another, the angular distance of the stars becomes known from the known angular value of a revolution of the screw by which the separation is produced. AMICI, of Modena, is said to have produced the best micrometers of this kind.

The duplication of images is also effected by the use of a doubly refracting prism of rock crystal, originally proposed by ROCHON. The difficulty of determining the relation between the given position of the crystal and the angular distance of two

* Upon the ring micrometer, see also papers by BESSEL in the *Monatliche Correspondenz*, Vols. XXIV. and XXVI.

objects which have been brought into contact, is a considerable obstacle to its general use, to say nothing of the optical difficulties in obtaining well defined images free from color *

STRUVE has proposed the use of a graduated plate of transparent mica placed in the focus of the equatorial, and this method has been employed by the Messrs BOND in cataloguing small stars Upon a plate of mica $\frac{1}{1000}$ of an inch in thickness are drawn two sets of parallel lines, one system representing declination circles, the other, at right angles to the first, representing parallels of declination. The relative declination of two stars which pass over the field is determined by merely observing the divisions of the graduated declination scale over which or near which they pass, and their relative right ascension is found from the observed times of their transits over the lines which represent declination circles, these times being noted by the aid of the electro-chronograph †

An ingenious mode of employing a double eye piece micrometer (consisting of two complete eye pieces), apparently giving very precise results, is suggested by Mr ALVAN CLARK, of Boston, in the Proceedings of the Am Association for the Adv of Science, 10th meeting, p 108

CORRECTION OF MICROMETRIC OBSERVATIONS FOR REFRACTION

292 Since the position of each of the two observed stars is affected by the atmospheric refraction, their *relative* position, determined by the micrometer, is also affected by it The object of the following investigations is to determine the correction of the micrometric measures themselves, without requiring a separate consideration of the absolute places of the two stars ‡

293 *To find the effect of refraction upon the observed angular distance of two stars and upon the angle which the great circle joining the stars makes with a vertical circle.*—This mode of observation is indeed not practised, but the investigation of the effect of refraction in

---

* For a description of a number of double image micrometers, see PEARSON's Practical Astronomy

† See *Annals of the Astronomical Observatory of Harvard College*, Vol I

‡ I have followed BESSEL's methods (*Astron Untersuch*, Vol I) in the investigation of the greater part of the formulæ That portion of his article which relates to the ring micrometer is, however, considerably abridged and simplified

this case is very simple, and will serve as the ground-work of the subsequent applications. Denote by

ζ, ζ', and z, z', the true and apparent zenith distances of the two stars S and S',
A, their difference of azimuth,
r, r', their refractions,
λ, λ', and l, l', the true and apparent angles which the great circle joining the stars makes with their respective vertical circles, all reckoned in the same direction,
σ, s, the true and apparent distances of the stars

We have, in the triangle formed by the zenith and the apparent places of the stars, by the Gaussian equations of spherical trigonometry,

$$\sin \tfrac{1}{2} s \sin \tfrac{1}{2}(l + l') = \sin \tfrac{1}{2} A \sin \tfrac{1}{2}(z + z')$$
$$\sin \tfrac{1}{2} s \cos \tfrac{1}{2}(l + l') = \cos \tfrac{1}{2} A \sin \tfrac{1}{2}(z - z')$$

and in the triangle formed by the zenith and the true places of the stars,

$$\sin \tfrac{1}{2}\sigma \sin \tfrac{1}{2}(\lambda + \lambda') = \sin \tfrac{1}{2} A \sin \tfrac{1}{2}(\zeta + \zeta')$$
$$\sin \tfrac{1}{2}\sigma \cos \tfrac{1}{2}(\lambda + \lambda') = \cos \tfrac{1}{2} A \sin \tfrac{1}{2}(\zeta - \zeta')$$

If we put

$$l_0 = \tfrac{1}{2}(l + l') \qquad \lambda_0 = \tfrac{1}{2}(\lambda + \lambda') \qquad \zeta_0 = \tfrac{1}{2}(\zeta + \zeta')$$

and also substitute $\zeta - r$ and $\zeta' - r'$ for z and z', the elimination of A from the above equations gives

$$\sin \tfrac{1}{2}\sigma \sin \lambda_0 = \sin \tfrac{1}{2} s \sin l_0 \, \frac{\sin \zeta_0}{\sin [\zeta_0 - \tfrac{1}{2}(r + r')]}$$

$$\sin \tfrac{1}{2}\sigma \cos \lambda_0 = \sin \tfrac{1}{2} s \cos l_0 \, \frac{\sin \tfrac{1}{2}(\zeta - \zeta')}{\sin \tfrac{1}{2}[\zeta - \zeta' - (r - r')]}$$

We may evidently, in the first equation, put r_0 for $\tfrac{1}{2}(r + r')$, which is equivalent to assuming that the mean of the refractions for the zenith distances ζ and ζ' is the same as the refraction for the mean of these zenith distances, an assumption producing here no sensible error in the factor $\sin [\zeta_0 - \tfrac{1}{2}(r + r')]$ or $\sin (\zeta_0 - r_0)$ We may also take

$$r - r' = \frac{dr_0}{d\zeta_0}(\zeta - \zeta')$$

in which the differential coefficient $\frac{dr_0}{d\zeta_0}$ expresses the rate of change of the refraction corresponding to ζ_0. Then, in the fraction

$$\frac{\sin\frac{1}{2}(\zeta-\zeta')}{\sin\frac{1}{2}[\zeta-\zeta'-(r-r')]}$$

which differs but little from unity, we may put the arcs for their sines. so that, denoting this fraction by b, we have

$$b=\frac{\zeta-\zeta'}{\zeta-\zeta'-(r-r')}=\frac{1}{1-\frac{r-r'}{\zeta-\zeta'}}=\frac{1}{1-\frac{dr_0}{d\zeta_0}}$$

If we also put

$$a=\frac{\sin\zeta_0}{\sin(\zeta_0-r_0)}$$

and substitute $\frac{1}{2}\sigma$ and $\frac{1}{2}s$ for their sines, our formulæ become

$$\sigma\sin\lambda_0=s\quad a\sin l_0$$
$$\sigma\cos\lambda_0=s\quad b\cos l_0$$

From these we have

$$\tan\lambda_0=\frac{a}{b}\tan l_0$$

which developed* gives

$$\lambda_0-l_0=-\frac{b-a}{b+a}\sin 2l_0+\tfrac{1}{2}\left(\frac{b-a}{b+a}\right)^2\sin 4l_0-\&c \qquad (342)$$

From the same formulæ we derive

$$\sigma\cos(\lambda_0-l_0)=s\,[a+(b-a)\cos^2 l_0]$$

and, dividing this by $\cos(\lambda_0-l_0)=1-\frac{1}{2}(\lambda_0-l_0)^2+\&c$, we obtain

$$\sigma-s=s\left[a-1+(b-a)\cos^2 l_0+\frac{a}{2}\left(\frac{b-a}{b+a}\right)^2\sin^2 2l_0+\&c\right] \qquad (343)$$

294. To facilitate the computation of (342) and (343) a convenient method of finding a and b is necessary We have, for any indeterminate ζ,

$$a=\frac{\sin\zeta}{\sin(\zeta-r)}=\frac{\sin(z+r)}{\sin z}=\cos r+\frac{\sin r}{\tan z}$$
$$b=\frac{d\zeta}{d\zeta-dr}=\frac{d(z+r)}{dz}=1+\frac{dr}{dz}$$

Adopting for the refraction the form (Vol. I Arts. 107 and 117)

$$r=k\tan z$$

* By Pl Trig Art 254

in which

$$k = \alpha\beta^{A}\gamma^{\lambda}$$

we have, putting $\cos r = 1$,

$$a = 1 + k$$

$$b - a = k \tan^2 z + \frac{dk}{dz} \tan z$$

These quantities may therefore be found by the aid of Column A of Table II But, as the argument is there the apparent zenith distance, while in micrometer observations it is generally the true zenith distance that is given, it is expedient to form a new table, by which a quantity $\varkappa$, depending upon the refraction, may be found with the argument ζ, such that

$$b - a = \varkappa \tan^2 \zeta$$

In order to obtain the value of $\varkappa$ for any state of the air, Bessel gives it the same form as that already adopted for k, and assumes

$$\varkappa = \alpha'' \beta^{A''} \gamma^{\lambda''}$$

in which the factors β and γ, depending on the barometer and thermometer, have the same values as before

The quantities $\log \alpha''$, A'', λ'', which are given in Column C of Table II, must be determined so as to satisfy the above definition of $\varkappa$ for all values of β and γ We have

$$\varkappa = k\frac{\tan^2 z}{\tan^2 \zeta} + \frac{dk}{dz}\frac{\tan z}{\tan^2 \zeta} = \left(k + \frac{dk}{dz}\cot z\right)\frac{\tan^2 z}{\tan^2 \zeta}$$

Taking the Napierian logarithms,

$$l\varkappa = l\alpha'' + A'' l\beta + \lambda'' l\gamma = l\left(k + \frac{dk}{dz}\cot z\right) + 2l\left(\frac{\tan z}{\tan \zeta}\right) \quad (344)$$

From the definition of k, we have

$$\frac{dk}{dz} = k\left[\frac{d\alpha}{\alpha\, dz} + l\beta\frac{dA}{dz} + l\gamma\frac{d\lambda}{dz}\right]$$

$$k + \frac{dk}{dz}\cot z = k\left[1 + \frac{d\alpha}{r\, dz} + \left(l\beta\frac{dA}{dz} + l\gamma\frac{d\lambda}{dz}\right)\cot z\right]$$

$$= k\left(1 + \frac{d\alpha}{r\, dz}\right)\left[1 + \frac{\left(l\beta\frac{dA}{dz} + l\gamma\frac{d\lambda}{dz}\right)\cot z}{1 + \frac{d\alpha}{r\, dz}}\right]$$

Since β and γ differ but little from unity, $l\beta$ and $l\gamma$ are so small that we may neglect their squares, so that the logarithm of the last factor of the above expression, under the form $l(1+x)$, may be put $= x$, and hence

$$l\left(k+\frac{dk}{dz}\cot z\right)=l\alpha+A\,l\beta+\lambda\,l\gamma+l\left(1+\frac{d\alpha}{r\,dz}\right)$$
$$+\left[\frac{l\beta\dfrac{dA}{dz}+l\gamma\dfrac{d\lambda}{dz}}{1+\dfrac{d\alpha}{r\,dz}}\right]\cot z \qquad (345)$$

Now, let (z) denote that value of z which corresponds to the given ζ when $\beta=1$, $\gamma=1$, a value which can be found from Column A of the table, as in Art 119, Vol I Let the corresponding values of α, A, λ, as found from that column, be denoted by (α), (A), (λ), and the corresponding refraction by (r), then, α', A', λ' being taken from Column B for the given ζ, we have, as in the article just referred to,

$$(r)=(\alpha)\tan(z)=\alpha'\tan\zeta$$
$$z=(z)-\alpha'\tan\zeta\,(A'\,l\beta+\lambda'\,l\gamma)$$

The second member of (345) is a function of z, which may be transformed into a function of (z) The small terms multiplied by $l\beta$ and $l\gamma$ will not be sensibly affected by substituting (z) for z, (A) for A, &c The other terms may be developed by the formula

$$fz=f(z)+\frac{df(z)}{d(z)}\,y+$$

in which

$$y=-\alpha'\tan\zeta\,(A'\,l\beta+\lambda'\,l\gamma)=-(\alpha)\tan(z)\,(A'\,l\beta+\lambda'\,l\gamma)$$

We find

$$l\left(k+\frac{dk}{dz}\cot z\right)=l(\alpha)+(A)\,l\beta+(\lambda)\,l\gamma+l\left(1+\frac{d(\alpha)}{(r)\,d(z)}\right)$$
$$-\left[\frac{d(\alpha)}{d(z)}\tan(z)-\frac{\dfrac{(\alpha)}{(r)}\dfrac{d(\alpha)}{d(z)}\sec^2(z)}{1+\dfrac{d(\alpha)}{(r)\,d(z)}}\right](A'\,l\beta+\lambda'\,l\gamma)$$
$$+\left[\frac{l\beta\dfrac{d(A)}{d(z)}+l\gamma\dfrac{d(\lambda)}{d(z)}}{1+\dfrac{d(\alpha)}{(r)\,d(z)}}\right]\cot(z)$$

We have, also,

$$\frac{\tan z}{\tan \zeta} = \frac{\tan[(z)+y]}{\tan \zeta} = \frac{\tan (z)}{\tan \zeta} - \frac{\alpha'}{\cos^2 (z)} (A' l\beta + \lambda' l\gamma)$$

$$= \frac{\alpha'}{(\alpha)} \left[1 - \frac{(\alpha)}{\cos^2 (z)} (A' l\beta + \lambda' l\gamma)\right]$$

$$2 l\left(\frac{\tan z}{\tan \zeta}\right) = 2 l\alpha' - 2 l(\alpha) - \frac{2 (\alpha)}{\cos^2 (z)} (A' l\beta + \lambda' l\gamma)$$

Hence, substituting in (344),

$$l\alpha'' + A'' l\beta + \lambda'' l\gamma = 2 l\alpha' - l(\alpha) + l\left(1 + \frac{d(\alpha)}{(r) d(z)}\right)$$

$$+ l\beta\left[(A) - \frac{2(\alpha)}{\cos^2(z)} A' - \frac{d(\alpha)}{d(z)} \tan(z) A' + \frac{\frac{(\alpha)}{(r)} \frac{d(\alpha)}{d(z)} \sec^2(z) A' + \frac{d(A)}{d(z)} \cot(z)}{1 + \frac{d(\alpha)}{(r) d(z)}}\right]$$

$$+ l\gamma\left[(\lambda) - \frac{2(\alpha)}{\cos^2(z)} \lambda' - \frac{d(\alpha)}{d(z)} \tan(z) \lambda' + \frac{\frac{(\alpha)}{(r)} \frac{d(\alpha)}{d(z)} \sec^2(z) \lambda' + \frac{d(\lambda)}{d(z)} \cot(z)}{1 + \frac{d(\alpha)}{(r) d(z)}}\right]$$

Since this must be satisfied for all values of β and γ, the coefficients of $l\beta$ and $l\gamma$ in the two members must be equal, respectively. Now, we have found, in Vol I Art 119,

$$(A) = A'\left(1 + \frac{d(r)}{d(z)}\right) = A'\left[1 + (\alpha)\sec^2(z) + \frac{d(\alpha)}{d(z)} \tan(z)\right]$$

$$(\lambda) = \lambda'\left(1 + \frac{d(r)}{d(z)}\right) = \lambda'\left[1 + (\alpha)\sec^2(z) + \frac{d(\alpha)}{d(z)} \tan(z)\right]$$

Substituting these values in the above equations, and comparing similar terms, we find

$$\left.\begin{aligned} l\alpha'' &= 2l\alpha' - l(\alpha) + l\left(1 + \frac{d(\alpha)}{(r) d(z)}\right) \\ \left(1 + \frac{d(\alpha)}{(r)\, d(z)}\right)(A'' - A') &= -\frac{A'(\alpha)}{\cos^2(z)} + \frac{d(A)}{d(z)} \cot(z) \\ \left(1 + \frac{d(\alpha)}{(r)\, d(z)}\right)(\lambda'' - \lambda') &= -\frac{\lambda'(\alpha)}{\cos^2(z)} + \frac{d(\lambda)}{d(z)} \cot(z) \end{aligned}\right\} \quad (346)$$

by which $l\alpha''$, A'', λ'' are computed The quantities α and α' in Columns A and B of the table, are expressed in seconds, but α'' in Column C is in parts of the radius, so that we must add to

the value found by the first of the equations (346), the constant $\log \sin 1'' = 4.685575$. In the second member of the other two equations we must also put $(\alpha) \sin 1''$ for (α), and $d(z) \sin 1''$ for $d(z)$

295 With the table thus prepared, the computation of $\varkappa$ is precisely like that of k in finding the refraction For example, to find $\log \varkappa$ for $\zeta = 80°$, Barom. 30.35 inches, Attached Therm. 40° F, Ext Therm 35° F, we have

$A'' = \quad 0.994$	$\lambda'' = \quad 1.099$	$\log \alpha'' = \quad 6.3947$
$\log B = +0.01092$	$\log \gamma = +0.01185$	$A'' \log \beta = +0.0105$
$\log T = -0.00031$		$\lambda'' \log \gamma = +0.0130$
$\log \beta = +0.01061$		$\log \varkappa = \quad 6.4182$

296 Our fundamental equations (342) and (343) may now be reduced to a much more simple form It is evident that on account of the small value of $\varkappa$ we may omit the terms in $(b-a)^2$, &c For the same reason, we may put $\frac{b-a}{2}$ for $\frac{b-a}{b+a}$, from which it differs only by terms involving $\varkappa^2$ In (343) we may put $a - 1 = \varkappa$ instead of its true value k, without sensible error, for even at the zenith distance 85° the difference of $\varkappa$ and k is only 0.00006, and consequently the error of substituting one for the other in this term will be less than $s \times 0.00006$, so that even if s were as great as 1000″ the error would not amount to 0″.06 We therefore adopt as fundamental the following simplified forms

$$\left.\begin{aligned} \sigma - s &= s\varkappa (\tan^2 \zeta \cos^2 l_0 + 1) \\ \lambda_0 - l_0 &= -\varkappa \tan^2 \zeta \cos l_0 \sin l_0 \end{aligned}\right\} \quad (347)$$

In these equations ζ is the mean of the true zenith distances of the two stars, and $\varkappa$ the corresponding quantity in the refraction table. The quantity l_0 is that which would be given directly by the observation.

The mean zenith distance ζ will be found, by a single computation, from the mean of the hour angles of the two stars and the mean of their declinations Denoting these by τ_0 and δ_0, and the latitude of the place of observation by φ, we have, by equations (20), Vol. I,

$$\left.\begin{aligned} \tan N &= \cot \varphi \cos \tau_0 \\ \tan \zeta \sin q &= \frac{\tan \tau_0 \sin N}{\sin (\delta_0 + N)} \\ \tan \zeta \cos q &= \cot (\delta_0 + N) \end{aligned}\right\} \quad (348)$$

The parallactic angle q which these formulæ give at the same time with ζ will be required in the subsequent problems In the observatory the computation is facilitated by a table, computed for the given latitude, which gives the value of N, and of $\log n = \log(\tan \tau_0 \sin N)$, for every minute of the hour angle τ. We then have only to compute the equations

$$\left.\begin{aligned}\tan\zeta\sin q &= n\,\mathrm{cosec}\,(\delta_0 + N)\\ \tan\zeta\cos q &= \cot(\delta_0 + N)\end{aligned}\right\}\quad(348^*)$$

297 *Correction for refraction of micrometric observations of the distance and position angle between two stars* —The observed position angle p is the position angle at the middle point of the arc joining the two stars (Art 260) Let π denote the true value of this angle, q the true parallactic angle found by (348), then we have

$$\lambda_0 = \pi - q$$

and if q' is the apparent parallactic angle, we have

$$l_0 = p - q'$$

From the differential formula (47) of Vol. I. we find that if ζ varies by $d\zeta = r$, the angle q varies by the quantity

$$q' - q = r\sin q\tan\delta_0$$

and if we take for r the form (Vol. I Art 119)

$$r = k'\tan\zeta$$

we have

$$q' = q + k'\tan\zeta\sin q\tan\delta_0$$

and, consequently,

$$l_0 = p - q - k'\tan\zeta\sin q\tan\delta_0$$

This value of l_0 is to be substituted in (347), but in the terms already multiplied by $s\varkappa$ we may take $l_0 = p - q$ Hence we have

$$\begin{aligned}\sigma - s &= s\varkappa\,[\tan^2\zeta\cos^2(p - q) + 1]\\ \pi - p &= -\varkappa\tan^2\zeta\cos(p - q)\sin(p - q) - k'\tan\zeta\sin q\tan\delta_0\end{aligned}$$

Since the position angle cannot be determined within a number of seconds, the error of putting $\varkappa$ for k' in the last term of the formula for $\pi - p$ will be of no practical importance, and, moreover, since the terms of the series (342) have to be reduced

to seconds by multiplying by the radius in seconds (= cosec 1″), we have, finally,

$$\begin{aligned} \sigma - s &= s\varkappa [\tan^2 \zeta \cos^2 (p - q) + 1] \\ \pi - p &= -\varkappa \operatorname{cosec} 1'' [\tan^2 \zeta \cos (p - q) \sin (p - q) + \tan \zeta \sin q \tan \delta_0] \end{aligned} \tag{349}$$

Having obtained σ and π by adding these corrections to s and p, the *true* difference of right ascension and declination of the stars may then be computed by Art 264, employing σ and π for s and p; that is, by the formulæ

$$\left.\begin{aligned} \sin \tfrac{1}{2} (\alpha' - \alpha) &= \sin \tfrac{1}{2} \sigma \sin \pi \sec \delta_0 \\ \sin \tfrac{1}{2} (\delta' - \delta) &= \sin \tfrac{1}{2} \sigma \cos \pi \sec \tfrac{1}{2} (\alpha' - \alpha) \end{aligned}\right\} \tag{350}$$

or by the approximate formulæ

$$\left.\begin{aligned} \alpha' - \alpha &= \sigma \sin \pi \sec \delta_0 \\ \delta' - \delta &= \sigma \cos \pi \end{aligned}\right\} \tag{350*}$$

298 If the apparent differences of right ascension and declination have already been computed from s and p by Art 264, and we wish to correct them for refraction, we have, by comparing the formulæ (284) and (350*), and denoting the corrections which the apparent values of $\alpha' - \alpha$ and $\delta' - \delta$ require by the symbol Δ,

$$\begin{aligned} \Delta(\alpha' - \alpha) &= (\sigma \sin \pi - s \sin p) \sec \delta_0 \\ \Delta(\delta' - \delta) &= \sigma \cos \pi - s \cos p \end{aligned}$$

or,

$$\begin{aligned} \Delta(\alpha' - \alpha) &= [(\sigma - s) \sin p + \sigma (\sin \pi - \sin p)] \sec \delta_0 \\ \Delta(\delta' - \delta) &= (\sigma - s) \cos p + \sigma (\cos \pi - \cos p) \end{aligned}$$

or, again, with sufficient accuracy,

$$\begin{aligned} \Delta(\alpha' - \alpha) &= [(\sigma - s) \sin p + s (\pi - p) \sin 1'' \cos p] \sec \delta_0 \\ \Delta(\delta' - \delta) &= (\sigma - s) \cos p - s (\pi - p) \sin 1'' \sin p \end{aligned}$$

and, substituting the values of $\sigma - s$ and $\pi - p$ from (349),

$$\begin{aligned} \Delta(\alpha' - \alpha) &= s\varkappa [\tan^2 \zeta \cos (p - q) \sin q - \tan \zeta \sin q \tan \delta_0 \cos p + \sin p] \sec \delta_0 \\ \Delta(\delta' - \delta) &= s\varkappa [\tan^2 \zeta \cos (p - q) \cos q + \tan \zeta \sin q \tan \delta_0 \sin p + \cos p] \end{aligned} \tag{351}$$

These formulæ are somewhat abridged by introducing an auxiliary u such that

$$\tan u = \tan \zeta \sin q \tan \delta_0$$

by which they become

$$\left.\begin{aligned}\Delta(\alpha'-\alpha) &= s\varkappa\,[\tan^2\zeta\cos(p-q)\sin q+\sec u\sin(p-u)]\sec\delta_0\\ \Delta(\delta'-\delta) &= s\varkappa\,[\tan^2\zeta\cos(p-q)\cos q+\sec u\cos(p-u)]\end{aligned}\right\}\quad(351^*)$$

EXAMPLE.—In the example, Art 264, we had the observed quantities $s = 316''\,993$, $p = 169°\ 57'\ 7$ The latitude of the place of observation was $\varphi = 38°\ 53'\ 7$, and the sidereal time was $0^h\ 17^m\ 52^s$ The right ascension and declination of the middle point between the stars were, approximately,

$$\alpha_0 = 21^h\ 51^m\ 52^s \qquad \delta_0 = -\ 13°\ 28'\ 5$$

The corrections for refraction being exceedingly small in the case of so small a value of s, the observer did not think it necessary to record the state of the atmosphere; but, for the sake of illustration, I shall assume Barometer 30 29 inches, Att. Therm 49°, Ext Therm 41° Fahr

We have, first, the hour angle of the middle point between the observed bodies, $\tau_0 = 2^h\ 26^m = 36°\ 30'$, with which and the above values of φ and δ_0 we find, by (348),

$$N = 44°\ 53'\ 9 \qquad \zeta = 62°\ 28'\ 5 \qquad q = 31°\ 28'\ 2$$

and by Column C of Table II,

$$\log\varkappa = 6\,4555$$

Then, by (349), we find

$$\sigma - s = +\ 0''\,277 \qquad \pi - p = +\ 2'\ 1''.7$$

and hence

$$\sigma = 317''\,270 \qquad \pi = 169°\ 59'\ 73$$

From these, by (350*), the true difference of right ascension and declination are found to be

$$(\alpha' - \alpha) = +\ 56''\,68 \qquad (\delta' - \delta) = -\ 5'\ 12''\,45$$

But, supposing the apparent differences to have been already computed as in Art. 264, namely,

$$\alpha' - \alpha = +\ 56''\,82 \qquad \delta' - \delta = -\ 5'\ 12''\,14$$

we should compute the corrections of these quantities by (351*), which give

$$\Delta(\alpha' - \alpha) = -\ 0''\,136 \qquad \Delta(\delta' - \delta) = -\ 0''\,306$$

which added to $\alpha'-\alpha$ and $\delta'-\delta$ give the same values of $(\alpha'-\alpha)$ and $(\delta'-\delta)$ as above found.

299 *Correction for refraction of micrometer observations in which the difference of right ascension has been obtained from the difference of the times of transit of the stars over threads lying in the direction of circles of declination, and the difference of declination has been directly measured* (2d Method, Art 266)

Let t and t' denote the observed sidereal times of transit of the two stars over the same declination circle A star upon the same parallel of declination as the second star, but having the right ascension $\alpha'-(t'-t)$, would have been observed simultaneously with the first star, and would, therefore, have had the same apparent right ascension The effect of refraction upon the time of transit of this supposed star is evidently the same as in the case of the real star; and the effect upon the difference of declination is also the same: so that this case is reduced to the preceding by supposing the stars to have been observed with an apparent position angle $p=0$, and apparent distance $s=\delta'-\delta$ These substitutions in (351) give the required corrections

$$\Delta(\alpha'-\alpha)=\varkappa(\delta'-\delta)\,[\tan^2\zeta\cos q\sin q-\tan\zeta\sin q\tan\delta_0]\sec\delta_0$$
$$\Delta(\delta'-\delta)=\varkappa(\delta'-\delta)\,[\tan^2\zeta\cos^2 q+1]$$

These formulæ are simplified by introducing the auxiliary N already used in the computation of ζ. Substituting the values of $\tan\zeta\sin q$ and $\tan\zeta\cos q$ from (348) and (348*), they are readily reduced to the following

$$\left.\begin{aligned}\Delta(\alpha'-\alpha)&=\frac{\varkappa(\delta'-\delta)}{\sin^2(\delta_0+N)}\,\frac{n\cos(2\delta_0+N)}{\cos^2\delta_0}\\ \Delta(\delta'-\delta)&=\frac{\varkappa(\delta'-\delta)}{\sin^2(\delta_0+N)}\end{aligned}\right\}\quad(352)$$

EXAMPLE.—In the example, Art 266, we have the observed difference of right ascension and declination of *Neptune* and a known star,

$$\alpha'-\alpha=+1^m\,45^s{\cdot}30 \qquad \delta'-\delta=-7'\,28''\,22$$

and the place of the star,

$$\alpha=21^h\,50^m\,8^s\,99 \qquad \delta=-13^\circ\,23'\,35''\,11$$

The sidereal time of the star's transit being $23^h\ 26^m\ 43^s.4$, the common hour angle at which the objects were observed was

$$\tau_0 = 1^h\ 36^m\ 31^s.4 = 24°\ 8'.6$$

with which and $\varphi = 38°\ 53'.7$, $\delta_0 = -13°\ 27'.3$, we find, by (348),

$$N = 48°\ 31'.5 \qquad \log n = \log(\tan\tau_0 \sin N) = 9.5261$$
$$\zeta = 57\quad 0.1$$

and assuming Barom 30.29 inches, Att Therm 49°, Ext. Therm. 41° Fahr, we find, by Column C of Table II,

$$\log \varkappa = 6.4577$$

Hence, by (352),

$$\Delta(\alpha' - \alpha) = -0''.128 = -0^s.009 \qquad \Delta(\delta' - \delta) = -0''.389$$

The differences corrected for refraction are, therefore,

$$\alpha' - \alpha = +1^m\ 45^s.29 \qquad \delta' - \delta = -7'\ 28''.61$$

and hence the apparent place of *Neptune*, affected now only by parallax, was

$$\alpha' = 21^h\ 51^m\ 54^s.28 \qquad \delta' = -13°\ 31'\ 3''.72$$

on November 29, 1846, at $23^h\ 28^m\ 28^s.7$ sidereal time at Washington

300 *Correction for refraction of observations made with the ring micrometer* —At each transit of a star over the edge of the ring, its *apparent* distance from the centre, C, of the ring is equal to the radius r If at the time t_1 of its first transit its true distance is σ_1, we shall have, by (349), putting r for s,

$$\sigma_1 = r\,[1 + \varkappa + \varkappa \tan^2\zeta \cos^2(p - q)] \qquad (353)$$

in which p is the position angle of the star referred to C The zenith distance ζ and the parallactic angle q belong to the middle point between the star and C, but it is easily seen that it will produce no important error to assume them either for the point C or for a mean point between the stars compared We shall, therefore, here suppose ζ and q to have the same values for all observations made in the same position of the ring At the time t_2 of the star's second transit, the position angle, reckoned in the same direction as for the first transit from the declination

circle through C, will be $360° - p$ · so that, if σ_2 is then the true distance of the star from C, we have

$$\sigma_2 = r\,[1 + \varkappa + \varkappa \tan^2 \zeta \cos^2 (p + q)] \qquad (354)$$

Now, let

t_0 = the time of the star's transit over the *true* declination circle of C,

τ_1, τ_2 = the *true* hour angles of the star, reckoned from the declination circle of C, at the two observed transits,

δ, D = the declination of the star and of C,

then we have

$$t_0 = t_1 + \tau_1, \qquad t_0 = t_2 - \tau_2$$

and in the two triangles formed by the pole, the point C, and the two *true* places of the stars at the two observations, we have

$$\cos \sigma_1 = \sin D \sin \delta + \cos D \cos \delta \cos \tau_1$$
$$\cos \sigma_2 = \sin D \sin \delta + \cos D \cos \delta \cos \tau_2$$

From the difference of these equations, namely,

$$2 \sin \tfrac{1}{2} (\sigma_1 + \sigma_2) \sin \tfrac{1}{2} (\sigma_1 - \sigma_2) = 2 \cos D \cos \delta \sin \tfrac{1}{2} (\tau_1 + \tau_2) \sin \tfrac{1}{2} (\tau_1 - \tau_2)$$

we derive, approximately,

$$\tfrac{1}{2} (\tau_1 - \tau_2) = \left(\frac{\sigma_1 - \sigma_2}{2}\right)\left(\frac{\sigma_1 + \sigma_2}{2}\right) \frac{2 \sec D \sec \delta}{\tau_1 + \tau_2}$$

To reduce this expression to a practical form, we have first, from (353) and (354),

$$\tfrac{1}{2} (\sigma_1 - \sigma_2) = r \varkappa \tan^2 \zeta \sin p \cos p \sin 2 q$$

in which we may use the approximate values of $\sin p$ and $\cos p$ given by (331), where γ is the same as p, namely,

$$\sin p = \frac{(t_2 - t_1) \cos \delta}{2 r} \qquad \cos p = \frac{d}{r}$$

where d is the approximate value of $\delta - D$ found by neglecting the refraction

For $\tfrac{1}{2} (\sigma_1 + \sigma_2)$ we may here use r, for, being only a multiplier of $\tfrac{1}{2} (\sigma_1 - \sigma_2)$, the remaining terms would give only terms in $\varkappa^2$

in the product For $\tau_1 + \tau_2$ we put $t_2 - t_1$ These substitutions being made in the value of $\frac{1}{2}(\tau_1 - \tau_2)$, we have

$$\frac{1}{2}(\tau_1 - \tau_2) = d\varkappa \tan^2\zeta \sin 2q \sec D \tag{355}$$

which is the correction to be added to the mean of the observed times, in order to obtain the true time t_0 of the star's transit over the declination circle of the centre of the ring; for we have

$$t_0 = \frac{1}{2}(t_1 + t_2) + \frac{1}{2}(\tau_1 - \tau_2)$$

To find the correction of d for refraction, we observe that if τ_1 and τ_2 were known, the true value of the difference $\delta - D$ would be found by the formulæ

$$(\delta - D)^2 = \sigma_1^2 - (\tau_1 \cos\delta)^2$$
$$(\delta - D)^2 = \sigma_2^2 - (\tau_2 \cos\delta)^2$$

In these formulæ, indeed, the path of the star is supposed to be rectilinear, but the correction for curvature has already been investigated, and is given by (333) The mean of these values may be expressed as follows

$$(\delta - D)^2 = \left(\frac{\sigma_1 + \sigma_2}{2}\right)^2 + \left(\frac{\sigma_1 - \sigma_2}{2}\right)^2 - \left(\frac{\tau_1 + \tau_2}{2}\right)^2\cos^2\delta - \left(\frac{\tau_1 - \tau_2}{2}\right)^2\cos^2\delta$$

and, consequently, by neglecting terms in $\varkappa^2$,

$$(\delta - D)^2 = \left(\frac{\sigma_1 + \sigma_2}{2}\right)^2 - \left(\frac{\tau_1 + \tau_2}{2}\right)^2\cos^2\delta$$

The difference d is found from the formula

$$d^2 = r^2 - \left(\frac{t_2 - t_1}{2}\right)^2\cos^2\delta$$

and therefore, observing that $\tau_1 + \tau_2 = t_2 - t_1$,

$$(\delta - D)^2 - d^2 = \left(\frac{\sigma_1 + \sigma_2}{2}\right)^2 - r^2$$
$$= 2r^2\varkappa\,[1 + \tan^2\zeta\,(\sin^2 q + \cos^2 p \cos 2q)]$$

Substituting d for $r\cos p$, and then dividing both members by $(\delta - D) + d$, (or by $2d$, since this will involve only errors of the order $\varkappa^2$), we find

$$(\delta - D) - d = \frac{r^2\varkappa}{d}(\tan^2\zeta \sin^2 q + 1) + d\varkappa \tan^2\zeta \cos 2q \tag{356}$$

which is the required correction to be added to d

For a second star, we have, in like manner,

$$\left.\begin{aligned}\tfrac{1}{2}(\tau_1' - \tau_2') &= d'\varkappa \tan^2\zeta \sin 2q \sec D \\ t_0' &= \tfrac{1}{2}(t_1' + t_2') + \tfrac{1}{2}(\tau_1' - \tau_2')\end{aligned}\right\} \qquad (357)$$

$$(\delta' - D) - d' = \frac{r^2 \varkappa}{d'}(\tan^2\zeta \sin^2 q + 1) + d'\varkappa \tan^2\zeta \cos 2q \qquad (358)$$

The difference of right ascension of the stars found by neglecting the refraction is

$$\alpha' - \alpha = \tfrac{1}{2}(t_1' + t_2') - \tfrac{1}{2}(t_1 + t_2)$$

while the true value is $t_0' - t_0$, so that the correction for the refraction is

$$\Delta(\alpha' - \alpha) = \tfrac{1}{2}(\tau_1' - \tau_2') - \tfrac{1}{2}(\tau_1 - \tau_2)$$

or, by (355) and (357),

$$\Delta(\alpha' - \alpha) = (d' - d)\,\varkappa \tan^2\zeta \sin 2q \sec \delta_0 \qquad (359)$$

in which we have put $\delta_0 = \frac{1}{2}(\delta + \delta')$ instead of D. The correction of the difference of the declinations of the stars for refraction is, by (356) and (358),

$$\Delta(\delta' - \delta) = (d' - d)\,\varkappa \tan^2\zeta \cos 2q - \frac{r^2 (d' - d)}{dd'}\,\varkappa\,(\tan^2\zeta \sin^2 q + 1) \qquad (360)$$

The values of ζ and q to be used in these formulæ will be found by (348), employing $\delta_0 = \frac{1}{2}(\delta + \delta')$ and the hour angle τ_0 of the centre of the ring, which will be found from the transit of one of the stars by the formula

$$\tau_0 = \tfrac{1}{2}(t_1 + t_2) - \alpha$$

EXAMPLE.—To correct the results in the example of Art. 285 for refraction.—We have there found

$d' =$	$+ 17' \; 51''.9$	$\varphi =$	$+ 51^\circ \; 12'.4$
$d =$	$+ 13 \; 34.8$	$\delta_0 =$	$+ 24 \;\; 3.3$
$d' - d =$	$+ \; 4 \; 17.1$	$\tau_0 =$	$5^h \; 13^m \; 58^s$
$\alpha' - \alpha =$	$- \; 1^m \; 49^s.50$	$r =$	$1126''.25$

We find, by (348),

$N =$	$9^\circ \;\; 6'.7$	$\log n =$	9.89083
$q =$	$42 \;\; 53.7$	$\zeta =$	$64^\circ \; 25'.0$

The indications of the barometer and thermometer are not given, but, assuming a mean state of the air, the refraction table gives for this zenith distance $\log \varkappa = 6\ 4382$, with which we proceed to compute (359) and (360) as follows:

$$\begin{array}{rl}
\log(d'-d) & 2\ 4101 \\
\log \varkappa & 6\ 4382 \\
\log \tan^2 \zeta & \underline{0\ 6398} \\
 & 9\ 4881 \\
\log \cos 2q & \underline{8\ 8658} \\
\text{1st term of (360)} = & +\ 0''\ 02 \\
\\
\log \sin^2 q & \underline{9\ 6658} \\
\log(\tan^2\zeta \sin^2 q + 1) & 0\ 4802 \\
\log(d'-d)\varkappa & 8\ 8483 \\
\log r^2 & \underline{6\ 1032} \\
 & 5\ 4317 \\
\log dd' & \underline{5\ 9412} \\
\text{2d term of (360)} = & +\ 0''\ 31 \\
\Delta(\delta'-\delta) = & -\ 0''\ 29
\end{array}
\qquad
\begin{array}{rl}
\log \sec \delta_0 & 0\ 0395 \\
 & 9\ 4881 \\
\log \sin 2q & \underline{9\ 9988} \\
\log \Delta(\alpha'-\alpha) & 9\ 5264 \\
\Delta(\alpha'-\alpha) = & +\ 0''\ 34 = +\ 0^s\ 02
\end{array}$$

The corrected values are then

$$\alpha' - \alpha = -\ 1^m\ 49^s\ 48$$
$$\delta' - \delta = +\ 4'\ 16''\ 81$$

The corrections for refraction are in this instance less than the probable errors of observation. Indeed, with the ring micrometer, it will seldom be worth while to consider the refraction unless the zenith distance is over 60° and the difference of declination over 10′

CORRECTION OF MICROMETRIC OBSERVATIONS FOR PRECESSION, NUTATION, AND ABERRATION.

301. In most cases, micrometer observations of the difference of position of two celestial bodies have for their object the determination of the apparent place of one of these bodies from that of the other supposed to be given. The apparent place thus found is then usually to be reduced to the mean place for the beginning of the year, or any adopted epoch, by applying the corrections for precession, nutation, and aberration with reversed sign. Sometimes, also, it is desirable to reduce the data furnished by the micrometer on different dates to a common date. The only case of interest, however, is that in which the distance and position angle have been observed I shall consider first the effect of aberration.

302. *To find the effect of aberration upon the angular distance of two stars.*—Let us denote by E the point of the ecliptic from which the earth is moving (as in Art. 387 of Vol I); by ϑ_1, ϑ_2, the true angular distances of the stars from E, by ϑ_1', ϑ_2', the apparent distances from E affected by aberration, by σ and s, the true and apparent distances of the stars from each other, by γ_1, γ_2, the angles formed by σ with ϑ_1 and ϑ_2, by γ_1', γ_2', the angles formed by s with the same arcs Then, since the aberration acts only in the great circle joining the star and the point E, the angle at E between the arcs ϑ_1 and ϑ_2 remains unchanged, and we have, precisely as in the investigation of the differential refraction in Art 293,

$$\sin \tfrac{1}{2}\sigma \sin \tfrac{1}{2}(\gamma_1 + \gamma_2) = \sin \tfrac{1}{2}s \sin \tfrac{1}{2}(\gamma_1' + \gamma_2') \frac{\sin \tfrac{1}{2}(\vartheta_1 + \vartheta_2)}{\sin \tfrac{1}{2}(\vartheta_1' + \vartheta_2')}$$
$$\sin \tfrac{1}{2}\sigma \cos \tfrac{1}{2}(\gamma_1 + \gamma_2) = \sin \tfrac{1}{2}s \cos \tfrac{1}{2}(\gamma_1' + \gamma_2') \frac{\sin \tfrac{1}{2}(\vartheta_1 - \vartheta_2)}{\sin \tfrac{1}{2}(\vartheta_1' - \vartheta_2')}$$

If we write γ_0 and γ_0' for $\tfrac{1}{2}(\gamma_1 + \gamma_2)$ and $\tfrac{1}{2}(\gamma_1' + \gamma_2')$, we may put these equations under the form

$$\sigma \sin \gamma_0 = a s \sin \gamma_0'$$
$$\sigma \cos \gamma_0 = b s \cos \gamma_0'$$

in which we have put

$$a = \frac{\sin \vartheta_0}{\sin \vartheta_0'} \qquad b = \frac{\sin \tfrac{1}{2}(\vartheta_1 - \vartheta_2)}{\sin \tfrac{1}{2}(\vartheta_1' - \vartheta_2')}$$

Now, we have (Art 385, Vol I)

$$\vartheta_0' - \vartheta_0 = k \sin \vartheta_0$$

in which $k = 20''.4451$, and hence

$$a = 1 - k \cos \vartheta_0$$
$$b = \frac{1}{1 + k \cos \vartheta_0} = 1 - k \cos \vartheta_0 + k^2 \cos^2 \vartheta_0 - \&c$$

so that if we neglect k^2, as we may, we have $a = b$, and hence our equations give, simply,

$$\gamma_0 = \gamma_0'$$
$$\sigma = a s$$

Hence it follows, 1st, that the angle which σ makes with the arc ϑ_0 is not sensibly changed by the aberration, 2d, that the effect

of aberration upon the distance σ is the same in whatever direction the arc σ may lie, and depends only on the distance (ϑ_0) of its middle point from the point E, or, in general, upon the right ascension and declination of this middle point This latter principle suggests the most simple means of investigating a formula for computing the aberration in distance, we have only to assume the distance σ to coincide in direction with a declination circle, so that σ may be treated as the difference of declination of the stars Then the effect of aberration upon σ will be found by differentiating the expression $Cc' + Dd'$, which expresses the correction for aberration (Art 402, Vol I.), thus,

$$\Delta\sigma = \sigma \left[C \frac{dc'}{d\delta} + D \frac{dd'}{d\delta} \right]$$

Taking the values of a' and b' for the middle point of σ, or for the right ascension α_0 and declination δ_0, we put

$$\gamma = \sigma \frac{dc'}{d\delta} = - \sigma (\tan \varepsilon \sin \delta_0 + \sin \alpha_0 \cos \delta_0)$$

$$\delta = \sigma \frac{dd'}{d\delta} = \sigma \cos \alpha_0 \cos \delta_0$$

and then for computing $\Delta\sigma$ we have the simple formula

$$\Delta\sigma = + C\gamma + D\delta \tag{361}$$

for which C and D can be taken from the Ephemeris for the given date The correction thus found is to be added to the true distance to obtain the apparent distance

The position angle p_0 at the middle point of σ is composed of the angle γ_0 and of the angle which the declination circle makes with the arc ϑ_0 so that the change in p_0 is the same as that in the latter angle, that is, it is the difference of directions of the declination circles drawn through the true and apparent places of the stars This difference will be obtained at the same time with that produced by precession and nutation in the next article

303 *To find the effect of precession, nutation, and aberration upon the position angle of two stars* —Let α_0, δ_0, be the right ascension and declination of the middle point between the two stars The change Δp_0 in the position angle is simply the change of direction

of the declination circle drawn through this point so that we have

$$\tan \Delta p_0 = \Delta p_0 = \frac{d\alpha_0 \cos \delta_0}{d\delta_0}$$

or, taking $\alpha_0 = (\alpha_0) + Aa + Bb + Cc + Dd$ as the expression of the apparent right ascension at any time, where (α_0) is its mean value at the beginning of the given year (Vol I. Art 402), we have

$$\Delta p_0 = \cos \delta_0 \left[A \frac{da}{d\delta_0} + B \frac{db}{d\delta_0} + C \frac{dc}{d\delta_0} + D \frac{dd}{d\delta_0} \right]$$
$$= A\, n \sin \alpha_0 \sec \delta_0 + B \cos \alpha_0 \sec \delta_0 + C \cos \alpha_0 \tan \delta_0 + D \sin \alpha_0 \tan \delta_0$$

Hence, putting

$$\left.\begin{array}{ll} \alpha' = n \sin \alpha_0 \sec \delta_0 & \gamma' = \cos \alpha_0 \tan \delta_0 \\ \beta' = \cos \alpha_0 \sec \delta_0 & \delta' = \sin \alpha_0 \tan \delta_0 \end{array}\right\} \quad (362)$$

in which, for a given year $1800 + t$ (Vol I p 617),

$$n = 20''.0607 - 0''.0000863\, t$$

we have

$$\Delta p_0 = A\alpha' + B\beta' + C\gamma' + D\delta' \quad (363)$$

The annual increase of p_0 is $n \sin \alpha_0 \sec \delta_0$ If we wish to reduce the mean value of p_0 from one given year $1800 + t$ to another $1800 + t'$, we must, therefore, add the quantity $(t' - t)\, n \sin \alpha_0 \sec \delta_0$, in which α_0 and δ_0 should be taken for the date $1800 + \frac{1}{2}(t + t')$ The mean value of p_0 being thus reduced to the beginning of the year $1800 + t'$, its apparent value for the day of the year will then be found by adding the correction Δp_0 given by (363), A, B, C, and D being taken for the day from the annual Ephemeris or the *Tabulæ Regiomontanæ*.

The precession and nutation, evidently, do not affect the apparent angular distance of two stars.

APPENDIX.

METHOD OF LEAST SQUARES *

1 A NUMBER of observations being taken for the purpose of determining one or more unknown quantities, and these observations giving discordant results, it is an important problem to determine the *most probable* values of the unknown quantities The method of least squares may be defined to be that method of treating this general problem which takes as its fundamental principle, that *the most probable values are those which make the sum of the squares of the residual errors a minimum.* But, to understand this definition, some degree of acquaintance with the method itself is necessary

---

* The first published application of the method is to be found in LEGENDRE, *Nouvelles méthodes pour la détermination des orbites des comètes*, Paris, 1806 The development, however, from fundamental principles is due to GAUSS, who declared that he had used the method as early as 1795 See his *Theoria Motus Corporum Cœlestium*, 1809, Lib II Sec III , *Disquisitio de elementis ellipticis Palladis*, 1811, *Bestimmung der Genauigkeit der Beobachtungen* (v LINDENAU und BOHNENBERGER's *Zeitschrift*, 1816, I s 185), *Theoria combinationis observationum erroribus minimis obnoxiæ*, 1823, *Supplementum theoriæ combinationis*, &c , 1826 all of which have been rendered quite accessible through a French translation by J BERTRAND, *Méthode des moindres carrées Mémoires sur la combinaison des observations*, par CH FR GAUSS, Paris, 1855

For a digest of the preceding, together with the results of the labors of BESSEL and HANSEN, see ENCKE, *Ueber die Methode der kleinsten Quadrate*, Berliner Astron Jahrbuch for 1834, 1835, 1836, in connection with which must be mentioned especially the practical work of GERLING, *Die Ausgleichungsrechnungen der practischen Geometrie*, Hamburg, 1843

See also LAPLACE, *Théorie analytique des probabilités*, Liv II Chap IV , POISSON, *Sur la probabilité des résultats moyens des observations*, in the Connaissance des Temps for 1827, ENCKE, in the Berlin Jahrbuch for 1853, BESSEL, in *Astron Nach* , Nos 358 359, 399, HANSEN, in *Astron Nach* , Nos 192, 202 et seq , PEIRCE, in the *Astron Journal* (Cambridge, Mass), Vol II No 21, LIAGRE, *Calcul des probabilités et théorie des erreurs*, Bruxelles, 1852

ERRORS TO WHICH OBSERVATIONS ARE LIABLE

2 Every observation which is a *measure*, however carefully it may be made, is to be regarded as subject to error, for experience teaches that repeated measures of the same quantity, *when the greatest precision is sought*,* do not give uniformly the same result Two kinds of errors are to be distinguished

Constant or *regular errors* are those which in all measures of the same quantity, made under the same circumstances, obtain the same magnitude, or whose magnitude is dependent upon the circumstances according to any determinate law The causes of such errors must be the subject of careful preliminary search in all physical inquiries, so that their action may be altogether prevented or their effect removed by calculation For example, among the constant errors may be enumerated refraction, aberration, &c, the effect of the temperature of rods used in measuring a base line in a survey, the error of division of a graduated instrument when the same division is used in all the measures, any peculiarity of an instrument which affects a particular measurement always by the same amount, such as inequality of the pivots of a transit instrument, defective adjustment of the collimation, imperfections of lenses, defects of micrometer screws, &c, to which must be added constant peculiarities of the observer, who, for example, may always note the passage of a star over a thread of a transit instrument too soon, or too late, by a constant quantity, or who, in attempting to bisect a star with a micrometer thread, constantly makes the upper or the lower portion the greater, or who, in observing the contact of two images (in sextant measures, for instance), assumes for a contact a position in which the images are really at some constant small distance, or a position in which the images are really overlapped, &c &c.

Thus, we have three kinds of constant errors:

1st *Theoretical*, such as refraction, aberration, &c, whose effects, when their causes are once thoroughly understood, may be calculated *a priori*, and which thenceforth cease to exist as errors

* The qualification, "when the greatest precision is sought," is important, for if, e g, we were to determine the latitude of a place by repeated measures of the meridian altitude of the same fixed star with a sextant divided only to whole degrees, all our measures might give the same degree The accordance of observations is, therefore, not to be taken as an infallible evidence of their accuracy It is especially when we approach *the limits of our measuring powers* that we become sensible of the discrepancies of observations

The detection of a constant error in a certain class of observations very commonly leads to investigations by which its cause is revealed, and thus our physical theories are improved

2d. *Instrumental*, which are discovered by an examination of our instruments, or from a discussion of the observations made with them These may also be removed when their causes are fully understood, either by a proper mode of using the instrument, or by subsequent computation

3d *Personal*, which depend upon peculiarities of the observer, and in delicate inquiries become the subject of special investigation under the name of "personal equations"

We are to assume that, in any inquiry, all the sources of constant error have been carefully investigated, and their effects eliminated as far as practicable. When this has been done, however, we find by experience that there still remain discrepancies, which must be referred to the next following class

Irregular or *accidental errors* are those which have irregular causes, or whose effects upon individual observations are governed by no fixed law connecting them with the circumstances of the observations, and, therefore, can never be subjected *a priori* to computation Such, for example, are errors arising from tremors of a telescope produced by the wind: errors in the refraction produced by anomalous changes of density of the strata of the atmosphere, from unavoidable changes in the several parts of an instrument produced by anomalous variations of temperature, or anomalous contraction and expansion of the parts of an instrument even at known temperatures; but, more especially, errors arising from the imperfection of the senses, as the imperfection of the eye in measuring very small spaces, of the ear in estimating small intervals of time, of the touch in the delicate handling of an instrument, &c

This distinction between constant and irregular errors is, indeed, to a certain extent, rather relative than absolute, and depends upon the sense, more or less restricted, in which we consider observations to be of the *same nature* or made under the *same circumstances* For example, the errors of division of an instrument may be regarded as constant errors when the same division comes into all measures of the same quantity, but as irregular when in every measure a different division is used, or when the same quantity is measured repeatedly with different instruments

After a full investigation of the constant or regular errors, it is the next business of the observer to diminish as much as possible the irregular errors by the greatest care in the observations, and finally, when the observations are completed, there remains the important operation of combining them, so that the outstanding, unavoidable, irregular errors may have the least probable effect upon the results For this combination we invoke the aid of the method of least squares, which may be said to have for its object the restriction of the effect of irregular errors within the narrowest limits according to the theory of probabilities, and, at the same time, to determine from the observations themselves the errors to which our results are probably liable. It is proper to observe here, however, to guard against fallacious applications, that the theory of the method is grounded upon the hypothesis that we have taken a large number of observations, or, at least, a number sufficiently large to determine the errors to which the observations are liable

CORRECTION OF THE OBSERVATIONS.

3. When no more observations are taken than are sufficient to determine one value of each of the unknown quantities sought, we have no means of judging of the correctness of the results, and, in the absence of other information, are compelled to accept these results as true, or, at least, as the most probable But when additional observations are taken, leading to different results, we can no longer unconditionally accept any one result as true, since each must be regarded as contradicting the others The results cannot all be true, and are all probably, in a strict sense, false. The absolutely true value of the quantity sought by observation must, in general, be regarded as beyond our reach, and instead of it we must accept a value which may or may not agree with any one of the observations, but which is rendered *most probable* by the existence of these observations

The condition under which such a probable value is to be determined, is that *all contradiction among the observations is to be removed* This is a logical necessity, since we cannot accept for truth that which is contradictory or leads to contradictory results.

The contradiction is obviously to be removed by applying to the several observations (or conceiving to be applied) probable *corrections*, which shall make them agree with each other, and which we have reason to suppose to be equivalent in amount to

the accidental errors severally But let us here remark that we do not in this statement by any means imply that an observer is to *arbitrarily* assume a system of corrections which will produce accordance: on the contrary, the method we are about to consider is designed to remove, as far as possible, every arbitrary consideration, and to furnish a set of principles which shall always guide us to the most probable results The conscientious observer, having taken every care in his observation, will set it down, however discrepant it may appear to him, as a portion of the testimony collected, out of which the truth, or the nearest approximation to it, is to be sifted

Admitting, therefore, that the observations give us the best, as indeed the only, information we can obtain respecting the desired quantities, we must find a system of corrections which shall not only produce the desired accordance, but which shall also be the *most probable* corrections, and further *be rendered most probable by these observations themselves*

THE ARITHMETICAL MEAN

4 In order to discover a principle which may serve as a basis for the investigation, let us examine first the case of direct observations made for the purpose of determining a single unknown quantity

Let the quantity to be determined by direct observation be denoted by x (Suppose, for example, to fix our ideas, that this quantity is the linear distance between two fixed terrestrial points) If but one measure of x is taken and the result is a, we must accept as the only and, therefore, the most probable value, $x = a$ Let a second observation, taken under the same or precisely equivalent circumstances, and with the same degree of care, so that there is no reason for supposing it to be more in error than the first, give the value b Then, since there is no reason for preferring one observation to the other, the value of x must be so taken that the differences $x - a$, $x - b$ shall be numerically equal, and this gives

$$x = \tfrac{1}{2}(a + b)$$

This result must be regarded as the only one that can be inferred from the two observations consistently with our definition of accidental errors, for positive and negative accidental errors of

equal absolute magnitude are to be regarded as equal errors and as equally probable, since, from the care bestowed on the observations and the supposed similarity of the circumstances under which they are made, there is no reason *a priori* for assuming either a positive or a negative error to be the more probable

Now let a third observation be added, giving the value c. Since the three observations are of equal reliability, or, as we shall hereafter say, of *equal weight*, we must so combine a, b, and c that each shall have a like influence upon the result, in other words, x must be a symmetrical function of a, b, and c If we first consider a and b alone, then a and c, then b and c, we shall find the values

$$\tfrac{1}{2}(a+b), \qquad \tfrac{1}{2}(a+c), \qquad \tfrac{1}{2}(b+c),$$

with each of which the additional observation c, b, or a is to be combined Each combination must result in the same symmetrical function, which, whatever it may be, can be denoted by the functional symbol ψ. We must, therefore, have

$$\begin{aligned} x &= \psi\left[\tfrac{1}{2}(a+b), c\right] \\ &= \psi\left[\tfrac{1}{2}(a+c), b\right] \\ &= \psi\left[\tfrac{1}{2}(b+c), a\right] \end{aligned}$$

Introducing the sum of a, b, and c, or putting

$$s = a + b + c$$

these become

$$\begin{aligned} x &= \psi\left[\tfrac{1}{2}(s-c), c\right] = \psi\left[s, c\right] \\ &= \psi\left[\tfrac{1}{2}(s-b), b\right] = \psi\left[s, b\right] \\ &= \psi\left[\tfrac{1}{2}(s-a), a\right] = \psi\left[s, a\right] \end{aligned}$$

But s is already a symmetrical function of a, b, and c, and therefore these equations cannot all result in the same symmetrical function unless c, b, a, in the respective developments of the functions, disappear and leave only s Hence we must have

$$x = \psi(s)$$

Now, to determine ψ, we observe that, as it must be general, its nature may be learned from any special but known case Such a case is that in which the three observations give three equal values, or $a = b = c$, and in that case we have, as the only value, $x = a$, or

$$a = \psi(3a)$$

and, consequently, the symbol ψ signifies here the division by 3. Hence, generally,

$$x = \frac{a + b + c}{3}$$

In the same manner, if it had been previously shown that for m equally good observations the most probable value is

$$x = \frac{a + b + c + \ldots + n}{m}$$

it would follow that for an additional observation p we must have

$$x = \frac{a + b + c + \ldots + n + p}{m + 1}$$

for, putting $s = a + b + c + \ldots + n + p$, we shall have

$$x = \psi\left[\frac{1}{m}(s - p), p\right] = \psi\,[s, p] = \psi\,(s), \text{ \&c}$$

But we have shown that the form is true for three observed values hence, it is true for four, and since it is true for four values it is true for five, and thus generally for any number *

The principle here demonstrated, that the arithmetical mean of a number of equally good observations is the most probable value of the observed quantity, is that which has been universally adopted as the most simple and obvious, and might well be received as axiomatic The above demonstration is chiefly valuable as exhibiting somewhat more clearly the nature of the assumption that underlies the principle, which is that, under strictly similar circumstances, positive and negative errors of the same absolute amount are equally probable

5 If now $n', n'', n''' \ldots n^{(m)}$ are the m observed values of a required quantity x, and if x_0 denotes their arithmetical mean, the assumption of x_0 as the most probable value of x gives $n' - x_0, n'' - x_0, n''' - x_0$, &c , as the most probable system of corrections (subtractive from the observed values) which produce the required accordance But the equation

$$x_0 = \frac{n' + n'' + n''' + \ldots + n^{(m)}}{m} \tag{1}$$

* ENCKE, Berliner Astron Jahrbuch for 1834, p 262

may also be put under the form

$$(n' - x_0) + (n'' - x_0) + (n''' - x_0) + \qquad (n^{(m)} - x_0) = 0$$

that is, *the algebraic sum of the corrections is zero.*

This is, however, not the only characteristic of the system of corrections resulting from the use of the arithmetical mean Let us examine the sum of the squares of the corrections For brevity, let us denote the corrections, or, as they will be hereafter called, the *residuals*, by the symbol v so that

$$v' = n' - x_0, \qquad v'' = n'' - x_0, \qquad v''' = n''' - x_0, \text{ \&c}$$

and also denote the sums of quantities of the same kind by enclosing the common symbol in rectangular brackets. so that

$$[v] = v' + v'' + v''' + \text{\&c}$$
$$[vv] = v'v' + v''v'' + v'''v''' + \text{\&c}$$

a notation usually employed throughout the method of least squares We have

$$[v] = 0 \tag{2}$$

and

$$\begin{aligned}[vv] &= (n' - x_0)^2 + (n'' - x_0)^2 + (n''' - x_0)^2 + \cdot \quad \cdot \\ &= [nn] - 2\,[n]\,x_0 + mx_0^2\end{aligned}$$

But since we have also

$$x_0 = \frac{[n]}{m}$$

this equation becomes

$$\left.\begin{aligned}[vv] &= [nn] - 2\,[n]\,\frac{[n]}{m} + m\,\frac{[n]^2}{m^2} \\ &= [nn] - \frac{[n]^2}{m}\end{aligned}\right\} \tag{3}$$

Let x_1 be any assumed value of x, giving the residuals

$$v_1 = n' - x_1 \qquad v_2 = n'' - x_1 \qquad v_3 = n''' - x_1, \text{ \&c}$$

then, as above,

$$[v_1v_1] = [nn] - 2\,[n]\,x_1 + mx_1^2$$

Substituting in this the value of $[nn]$ given by (3), we find

$$\left.\begin{aligned}[v_1v_1] &= [vv] + \frac{[n]^2}{m} - 2\,[n]\,x_1 + mx_1^2 \\ &= [vv] + m\left(\frac{[n]}{m} - x_1\right)^2 \\ &= [vv] + m\,(x_0 - x_1)^2\end{aligned}\right\} \tag{4}$$

This equation determines the sum of the squares of the residuals for any assumed value of x Since the last term is always positive, we see that this sum for any value of x differing from the arithmetical mean x_0 is always greater than $[vv]$. Hence it is a second characteristic of the arithmetical mean, that it makes *the sum of the squares of the residuals a minimum.*

6 Observations may be not only *direct*, that is, made directly upon the quantity to be determined, but also *indirect*, that is, made upon some quantity which is a function of one or more quantities to be determined Indeed, the greater part of the observations in astronomy, and in physical science generally, belong to the latter class Thus, let x, y, z be the quantities to be determined, and M a function of them denoted by f, or

$$M = f(x, y, z \quad) \tag{5}$$

and let us suppose an observation to be made upon the value of M We then have but a single equation between x, y, z . . and the observed quantity M, and the problem is as yet indeterminate Various systems of values may be found to satisfy the equation, either exactly or approximately Let us, however, suppose that the most probable system (as yet unknown) is expressed by $x = p$, $y = q$, $z = r$, and let the value of the function, when these values are substituted in it, be denoted by V, or put

$$V = f(p, q, r \quad) \tag{6}$$

then $M - V$ is the residual error of the observation In like manner, if a number of observations of the same kind be taken, in which the observed quantities M', M'', M''' . . are functions determined by the same elements p, q, r, . , and if V', V'', V''' . are the values of these functions when p, q, r . . are substituted in them, then $M' - V'$, $M'' - V''$, $M''' - V'''$ ... are the residual errors of the observations If there are μ unknown quantities and also μ observations, and no more, there will be μ equations between the known and unknown quantities, which will fully determine the values of these unknown quantities: so that the probable values p, q, r . are, in that case, those determinate values which *exactly* satisfy all the equations, and, consequently, reduce every one of the residuals $M' - V'$, $M'' - V''$, &c to zero But, if there are more than μ observations the determinate values found from μ equations alone will not

necessarily satisfy the remaining equations, in consequence of accidental errors in the observations. The problem, then, is *to determine from* ALL *the observations*, or *from all the equations*, *the most probable system of values of the unknown quantities*, or, which is the same thing, *the most probable system of residual errors*. In the case of direct observations, we have seen that the most probable value of the unknown quantity was that which made the algebraic sum of the residuals zero; but this principle followed from taking the arithmetical mean of the *same* quantity, and is obviously inapplicable in the present case. The second principle, that the most probable value is that which makes the sum of the squares of the residuals a minimum, is of a more general character, and might be assumed at once, as at least a *plausible* principle, to serve as the basis of the solution of our problem; but it will be more satisfactory to justify its adoption by the calculus of probabilities.

THE PROBABILITY CURVE

7. Although accidental errors would seem at first sight to be of a capricious and irregular nature which would exclude them from the domain of mathematics, yet, upon examination from theoretical considerations, confirmed, as will be shown, by experience, we shall find that they are subject to remarkably precise laws. In the first place, we remark that they are subject to the following fundamental laws: 1st. Errors in excess and in defect—*i. e.* positive and negative, but of equal absolute value—are equally probable, and in a large number of observations are equally frequent. 2d. In every species of observations, there is a limit of error which the greatest accidental errors do not exceed: thus, if l denotes the absolute magnitude of this limit, all the positive errors are comprised between 0 and $+ l$, and all the negative errors between 0 and $- l$, and, consequently, all the errors are distributed over the interval $2l$. 3d. The errors are not distributed uniformly over this interval $2l$, but the smaller errors are more frequent than the larger ones.

Thus the frequency of an error of a given magnitude may be regarded as a function of the error itself; so that, if we denote an error of a certain magnitude by Δ, and its relative frequency in a given large number of observations by $\varphi\Delta$, this function should obtain its maximum value for $\Delta = 0$, and become zero

when $\Delta = \pm l$. If, then, we denote the *probability** of an error Δ by y, or put

$$y = \varphi\Delta \tag{7}$$

we may regard this as the equation of a curve, taking Δ as the abscissa and y as the ordinate The nature of this curve will be accurately defined when we have discovered the form of the function $\varphi\Delta$, but we can see in advance that a curve such as Fig A is required to satisfy the conditions already imposed upon

Fig A

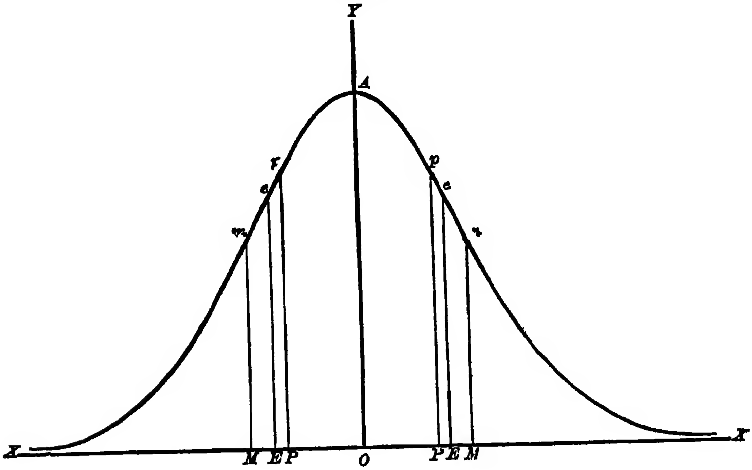

this function For its maximum ordinate must correspond to $\Delta = 0$, it must be symmetrical with reference to the axis of y, since equal errors with opposite signs have equal probabilities, and it must approach very near to the axis of abscissæ for values of Δ near the extreme limits, although the impossibility of assigning such extreme limits of error with precision must prevent us from fixing the point at which the curve will finally meet the axis

8 The number of possible errors in any class of observations is, strictly speaking, finite, for there is always a limit of accuracy to the observations, even when we employ the most refined instruments, in consequence of which there is a numerical succession in our results Thus, if 1″ is the smallest measure in a

* That is, if the error Δ occurs n times in m observations, $y = \phi\Delta = \frac{n}{m}$

given case, the possible errors, arranged in their order of magnitude, can only differ by 1″ or an integral number of seconds Hence, our geometrical representation should strictly consist of a number of isolated points, but, as these points will be more and more nearly represented by a continuous curve as we increase the accuracy of the observations, and thus diminish the intervals between the successive ordinates, we may, without hesitation, adopt such a continuous curve as expressing the law of error. We shall, therefore, regard $\varDelta$ as a continuous variable, and $\varphi\varDelta$ as a continuous function of it.

Now, by the theory of probabilities, if $\varphi\varDelta$, $\varphi\varDelta'$, $\varphi\varDelta''$ are the respective probabilities of all the possible errors $\varDelta$, $\varDelta'$, $\varDelta''$ we have*:

$$\varphi\varDelta + \varphi\varDelta' + \varphi\varDelta'' + \quad = 1$$

when the number of possible errors is finite But the assumed continuity of our curve requires that we consider the difference between successive values of $\varDelta$ as infinitesimal, and thus the number of values of $\varphi\varDelta$ is infinite, and the probability of any one of these errors is an infinitesimal To meet this difficulty, let us observe that if a finite series of errors $\varDelta$, $\varDelta'$, $\varDelta''$ be expressed in the smallest unit employed in the observations, these errors, arranged in the order of their magnitude, will be a series of consecutive integral numbers, the probability of the error $\varDelta$ may be regarded as the same as the probability that the error falls between $\varDelta$ and $\varDelta + 1$; and the probability of an error between $\varDelta$ and $\varDelta + i$ will be the sum of the probabilities of the errors $\varDelta$, $\varDelta + 1$, $\varDelta + 2$, . $\varDelta + (i - 1)$. If i is small, the probability of each of the errors from $\varDelta$ to $\varDelta + i$ will be nearly the same as that of $\varDelta$ so that their sum will differ but little from $i\varphi\varDelta$ As the interval between the successive errors diminishes, this expression becomes more accurate; and hence when we take $d\varDelta$, the infinitesimal, instead of i, we have $\varphi\varDelta\ d\varDelta$ as the rigorous expression of the probability that an error falls between $\varDelta$ and $\varDelta + d\varDelta$ Hence, it follows, in general, that the probability that an error falls between any given limits a and b is the sum of all

---

* For if there are n errors equal to $\varDelta$, n' equal to $\varDelta'$, &c , and the whole number of errors is m, the probabilities of the errors are respectively $\phi\varDelta = \frac{n}{m}$, $\phi\varDelta' = \frac{n'}{m}$, &c . and the sum of these is $\frac{n + n' + \quad}{m} = \frac{m}{m} = 1$

the elements of the form $\varphi\Delta\ d\Delta$ between these limits, or the integral

$$\int_a^b \varphi\Delta\ d\Delta$$

and this integral, taken between the extreme limits of error, and thus embracing all the possible errors, will be

$$\int_{-l}^{+l} \varphi\Delta\ d\Delta = 1$$

We have heretofore assumed that the function $\varphi\Delta$ is to be zero for $\Delta = \pm l$ It must also be added that, since the probability of any error greater than $\pm l$ is also zero, we should have to determine this function in such a manner that it would be zero for all values of Δ from $+ l$ to $+ \infty$ and from $- l$ to $- \infty$ The obvious impossibility of determining such a function leads us to extend the limits $\pm l$ to $\pm \infty$, and to take

$$\int_{-\infty}^{+\infty} \varphi\Delta\ d\Delta = 1 \tag{8}$$

This will evidently be allowable if the integral taken from $\pm l$ to $\pm \infty$ is so small as to be practically insignificant Besides, the extreme limits of error can never be fixed with precision, and it will suffice if the function $\varphi\Delta$ is such that it becomes very small for those errors which are regarded as very large

9 Returning now to the general case of indirect observations, Art 6, in which we suppose a quantity $M = f(x, y, z, .\ \ )$ to be observed, let $\Delta, \Delta', \Delta''$ be the errors of the several observed values of M, and $\varphi\Delta, \varphi\Delta', \varphi\Delta''$ their respective probabilities, then, the probability that these errors occur at the same time in the given series being denoted by P, we have, by a theorem of the calculus of probabilities,*

$$P = \varphi\Delta . \varphi\Delta'\ \varphi\Delta'' \tag{9}$$

The most probable system of values of the unknown quantities

* If a single action of a cause can produce the effects a, a', a'', with the respective probabilities p, p', p'', the probability that two successive independent actions of the cause will produce the effects a and a' is pp', and similarly for any number of effects Thus, if an urn contains 2 white balls, 3 red ones, and 5 black ones, the probability that in two successive drawings (the original number of balls being the same at each drawing) one ball will be white and the other red is $\frac{2}{10} \times \frac{3}{10}$

x, y, z . . will be that which makes the probability P a maximum. Consequently, since x, y, z . are here supposed to be independent,* the derivative of P relatively to each of these variables must be equal to zero, or, since log P varies with P, the derivatives of log P must satisfy this condition, and we shall have

$$\frac{1}{P}\frac{dP}{dx}=0, \qquad \frac{1}{P}\frac{dP}{dy}=0, \text{\&c}$$

which, since

$$\log P = \log \varphi\varDelta + \log \varphi\varDelta' + \log \varphi\varDelta'' + \dots .$$

give the equations

$$\left.\begin{aligned}
\varphi'\varDelta\,\frac{d\varDelta}{dx} + \varphi'\varDelta'\,\frac{d\varDelta'}{dx} + \varphi'\varDelta''\,\frac{d\varDelta''}{dx} + \quad &= 0 \\
\varphi'\varDelta\,\frac{d\varDelta}{dy} + \varphi'\varDelta'\,\frac{d\varDelta'}{dy} + \varphi'\varDelta''\,\frac{d\varDelta''}{dy} + \quad &= 0 \\
\varphi'\varDelta\,\frac{d\varDelta}{dz} + \varphi'\varDelta'\,\frac{d\varDelta'}{dz} + \varphi'\varDelta''\,\frac{d\varDelta''}{dz} + \ . \quad &= 0 \\
\text{\&c} \qquad \text{\&c} \qquad &
\end{aligned}\right\} \tag{10}$$

in which we have pu

$$\varphi'\varDelta = \frac{d\varphi\varDelta}{\varphi\varDelta d\varDelta}, \qquad \varphi\varDelta = \frac{d\varphi\varDelta'}{\varphi\varDelta' d\varDelta'}, \text{\&c.} \tag{11}$$

The number of equations in (10) being the same as that of the unknown quantities, these equations will serve to determine the unknown quantities when we have discovered the value of the function $\varphi'\varDelta$, as will be shown hereafter

Since the functions $\varphi\varDelta$ and $\varphi'\varDelta$ are supposed to be general, and therefore applicable whatever the number of unknown quantities, we may determine them by an examination of the special case in which there is but one unknown quantity, or that in which the observed values M, M', M'' belong to the same quantity In that case, the hypothesis that x is the value of this quantity gives the errors

$$\varDelta = M - x, \qquad \varDelta' = M' - x, \qquad \varDelta'' = M'' - x$$

---

* That is, subject to no restrictions except that they shall satisfy the observations, or the equations $M = f(x, y, z, \quad)$ For the case of "conditioned" observations, see Art 53 of this Appendix

whence

$$\frac{d\Delta}{dx} = \frac{d\Delta'}{dx} = \frac{d\Delta''}{dx} \quad \cdot = -1$$

and the first equation of (10) becomes

$$\varphi'(M-x) + \varphi'(M'-x) + \varphi'(M''-x) + \qquad = 0 \quad (12)$$

This being general for any number m of observations, and for any observed values M, M', M'' , let us suppose the special case

$$M' = M'' \qquad = M - mN$$

Since the arithmetical mean of the observed quantities is here the most probable value of x, we have

$$\begin{aligned} x &= \frac{1}{m}(M + M' + M'' + \qquad) \\ &= \frac{1}{m}[M + (m-1)(M - mN)] \\ &= M - (m-1)N \end{aligned}$$

whence

$$\begin{aligned} M - x &= (m-1)N \\ M' - x &= M'' - x \qquad = -N \end{aligned}$$

and, consequently, (12) becomes

$$\varphi'[(m-1)N] + (m-1)\varphi'(-N) = 0$$

or,

$$\frac{\varphi'[(m-1)N]}{(m-1)N} = \frac{\varphi'(-N)}{-N}$$

That is, for all values of m, and therefore for all values of $(m-1)N$, we have $\frac{\varphi'[(m-1)N]}{(m-1)N}$ equal to the *same* quantity $\frac{\varphi'(-N)}{-N}$. Hence we have generally $\frac{\varphi'\Delta}{\Delta}$ equal to a constant quantity, and, denoting this constant by k, we have

$$\varphi'\Delta = k\Delta$$

or, by (11),

$$\frac{d\varphi\Delta}{\varphi\Delta} = k\Delta \ d\Delta$$

Integrating,

$$\log \varphi\Delta = \tfrac{1}{2}k\Delta^2 + \log \varkappa$$

whence

$$\varphi\Delta = \varkappa \, e^{\frac{1}{2}k\Delta\Delta}$$

in which e is the base of the Napierian system of logarithms.

Since $\varphi\Delta$ must decrease as Δ increases, $\frac{1}{2}k$ must be essentially negative representing it, therefore, by $-h^2$, our function becomes

$$\varphi\Delta = \varkappa\, e^{-hh\Delta\Delta}$$

To determine the constant $\varkappa$, let this value be substituted in (8), which gives

$$\int_{-\infty}^{+\infty} \varkappa\, e^{-hh\Delta\Delta}\, d\Delta = 1$$

Putting

$$t = h\Delta \tag{13}$$

this integral becomes

$$\frac{\varkappa}{h}\int_{-\infty}^{+\infty} e^{-tt}\, dt = 1$$

The known value of the definite integral in the first member is $\sqrt{\pi}$ (see Vol I p 153); whence

$$\varkappa = \frac{h}{\sqrt{\pi}}$$

and the complete expression of $\varphi\Delta$ becomes

$$\varphi\Delta = \frac{h}{\sqrt{\pi}}\, e^{-hh\,\Delta\Delta} \tag{14}$$

The constant h must depend upon the nature of the observations, and will be particularly examined hereafter. If we here take it as the unit of abscissæ in the curve of probability, the equation (7) becomes

$$y = \frac{1}{\sqrt{\pi}}\, e^{-\Delta\Delta}$$

by which the curve may be constructed The values of y for a few values of Δ are as follows

Δ	y	Diff	Δ	y	Diff
0 0	0 5642		1 6	0 0436	
		— 0221			— 0215
0 2	0 5421		1 8	0 0221	
		— 0613			— 0118
0 4	0 4808		2 0	0 0103	
		— 0872			— 0058
0 6	0 3936		2 2	0 0045	
		— 0961			— 0027
0 8	0 2975		2 4	0 0018	
		— 0899			— 0011
1 0	0 2076		2 6	0.0007	
		— 0739			— 0005
1 2	0 1337		2 8	0 0002	
		— 0542			— 0001
1 4	0 0795		3 0	0 0001	
		— 0359			
1 6	0 0436		∞	0 0000	

The curve, Fig A, in Art 7, is constructed from this table, but, to exhibit its character more distinctly, the scale of the ordinates is four times that of the abscissæ (which, indeed, corresponds to the case of $h = 2$) We see that the curve approaches very near to the axis for moderate values of $\varDelta$, and that the assumption of $\pm\infty$ instead of finite limits of $\varDelta$ can involve no practical error It is evident that the axis XX is an asymptote to the curve

The differences in the above table indicate that the curve approaches the axis most rapidly at a point whose abscissa is between 0 6 and 0 8 The exact position of this point, which is a point of inflexion, is found by putting the second differential coefficient of y equal to zero, which gives

$$\frac{d^2y}{d\varDelta^2} = -\frac{2}{\sqrt{\pi}}e^{-\varDelta\varDelta} + \frac{4\varDelta\varDelta}{\sqrt{\pi}}e^{-\varDelta\varDelta} = 0$$

whence

$$\varDelta = \frac{1}{\sqrt{2}} = 0\ 7071$$

The ordinate Mm is drawn at this point We shall have occasion to refer to it again hereafter

THE MEASURE OF PRECISION

10 The constant h requires special consideration. Since the exponent of e in (14) must be an abstract number, $\frac{1}{h}$ must be a concrete quantity of the same kind as $\varDelta$ In a class of observations in which $\varDelta$ is small for a given probability $\varphi\varDelta$, $\frac{1}{h}$ will be small, and h will be large. Thus, h will be the greater the more precise the nature of the observations, and is, therefore, called by GAUSS the *measure of precision* If in one system of observations the probability of an error $\varDelta$ is expressed by

$$\frac{h}{\sqrt{\pi}}e^{-hh\varDelta\varDelta}$$

and in another, more or less precise, by

$$\frac{h'}{\sqrt{\pi}}e^{-h'h'\varDelta\varDelta}$$

the probability that in one observation of the first system the

error committed will be comprised between the limits $-\delta$ and $+\delta$ will be expressed by the integral

$$\int_{-\delta}^{+\delta}\frac{h}{\sqrt{\pi}}\,e^{-hh\Delta\Delta}\,d\Delta$$

and, in like manner, the probability that the error of an observation in the second system will be comprised between $-\delta'$ and $+\delta'$ will be expressed by

$$\int_{-\delta'}^{+\delta'}\frac{h'}{\sqrt{\pi}}\,e^{-h'h'\Delta\Delta}\,d\Delta$$

These integrals are evidently equal when we have $h\delta = h'\delta'$ If, for example, we have $h' = 2h$, the integrals will be equal when $\delta = 2\delta'$, that is, the double error will be committed in the first system with the same probability as the simple error in the second, or, in the usual mode of expression, the second system will be twice as precise as the first We shall presently see how the value of h can be found for any given observations.

THE METHOD OF LEAST SQUARES

11 The preceding discussion leads directly to important practical results We have seen (Art 9) that to find the most probable values of x, y, z . from the observed values of $M = f(x, y, z, \quad)$ we are to render the probability $P = \varphi\Delta\ \varphi\Delta'\ \varphi\Delta''$ a maximum, that is, by (14),

$$P = h^m\,\pi^{-\frac{1}{2}m}\,e^{-hh(\Delta\Delta+\Delta'\Delta'+\Delta''\Delta''+\quad)} \tag{15}$$

must be a maximum, and this requires that the quantity $\Delta\Delta + \Delta'\Delta' + \Delta''\Delta'' +$ should be a minimum Thus, the principle that *the most probable values of the unknown quantities are those which make the sum of the squares of the residual errors a minimum*, is not limited to the case of direct observations, but is entirely general

The principle is readily extended to observations of unequal precision For if the degree of precision of the observations M, M', M''. . be respectively h, h', h'' , and we compare these observed quantities with the values V, V', V'' , computed with the most probable values of x, y, z , whereby we obtain the residual errors $M - V = \Delta$, $M' - V' = \Delta'$, it is the same thing as if we had taken observations of equal precision (represented by 1) upon the quantities hM, $h'M'$, $h''M''$, ., and had

compared them with the computed quantities $hV, h'V', h''V'' \ldots$, whereby we should have found the errors $hM - hV = h\Delta$, $h'M' - h'V' = h'\Delta'$, in which case we should have to reduce to a minimum the quantity

$$h^2\Delta^2 + h'^2\Delta'^2 + h''^2\Delta''^2 +$$

that is, *each error being multiplied by its measure of precision, and thereby reduced to the same degree of precision, the sum of the squares of the reduced errors must be a minimum*

In what precedes is involved the whole theory of the method of least squares. I proceed to develop its practical features

THE PROBABLE ERROR

12 From the preceding articles it follows that the probability that the error of an observation falls between Δ and $\Delta + d\Delta$ is expressed by

$$\frac{h}{\sqrt{\pi}} e^{-hh\Delta\Delta} d\Delta$$

and the probability that it falls between the limits 0 and a is expressed by

$$\frac{h}{\sqrt{\pi}} \int_{\Delta=0}^{\Delta=a} e^{-hh\Delta\Delta} d\Delta$$

and this integral expresses the number of errors that we should expect to find between the limits 0 and a when the whole number of errors is put $= 1$ [equation (8)] If we put $t = h\Delta$, the integral takes the form

$$\frac{1}{\sqrt{\pi}} \int_{t=0}^{t=ah} e^{-tt} dt$$

The whole number of errors, both positive and negative, whose numerical magnitude falls between the given limits is twice this integral, or

$$\frac{2}{\sqrt{\pi}} \int_{t=0}^{t=ah} e^{-tt} dt \qquad (16)$$

The value of this integral (which may be computed by the methods of Vol I Art 113) is given in Table IX The number of errors between any two given limits will be found by taking the difference between the tabular numbers corresponding to these limits Since the total number of errors is taken as unity in the table, the required number of errors in any particular case is to be found by multiplying the tabular numbers by the actual

number of observations Thus, if there are 1000 observations, we find that

between $t = 0$	and $t = 0.5$	there are	520 errors
" $t = 0.5$	" $t = 1.0$	" "	322 "
" $t = 1.0$	" $t = 1.5$	" "	123 "
" $t = 1.5$	" $t = 2.0$	" "	29 "
" $t = 2.0$	" $t = \infty$	" "	5 "

13. The degrees of precision of different series of observations may be compared together either by comparing the values of h, or by comparing the errors which are committed with equal facility in the two systems The errors to be compared must occupy in the two systems a like position in relation to the extreme errors, and we may select for this purpose in each system *the error which occupies the middle place in the series of errors arranged in the order of their magnitude, so that the number of errors which are less than this assumed error is the same as the number of errors which exceed it* The error which satisfies this condition is that for which the value of the integral (16) is 0.5 Denoting the corresponding value of t by ρ, we find, by interpolation from Table IX,

$$\rho = 0.47694$$

and we have

$$\frac{2}{\sqrt{\pi}} \int_0^{\rho} e^{-t^2} dt = \frac{1}{2} \tag{17}$$

If then we denote by r the error which, in any system of observations whose degree of precision is h, corresponds to the value $t = \rho$, or put

$$\rho = hr \qquad h = \frac{\rho}{r} \tag{18}$$

there will be a probability of $\frac{1}{2}$ that the error of any single observation in that system will be less than r, and the same probability that it will be greater than r, which is sometimes expressed by saying that *it is an even wager that the error will be less than r* Hence r is called the *probable error*

We may, therefore, compare different series of observations by comparing their probable errors, their degrees of precision being, by (18), inversely proportional to these errors.

14 In order to apply Table IX in determining the number of errors in a given class of observations, we must know the

measure of precision h, or the probable error r thus, if we wish the number of errors less than a, we enter the table with the argument $t = ah$, or $t = \frac{a\rho}{r}$

For greater convenience, we can employ Table IX A, which gives the same function with the argument $\frac{a}{r}$. For example, if there are 1000 observations whose probable error is $r = 2''$, and we wish to know the number of errors less than $a = 1''$, we take from Table IX A, with the argument $\frac{a}{r} = 0\ 5$, the number 0 26407, which multiplied by 1000 gives 264 as the required number

The following example from the *Fundamenta Astronomiæ* of Bessel will serve to show how far the preceding theory is sustained by experience In 470 observations made by Bradley upon the right ascension of *Sirius* and *Altair*, Bessel found the probable error of a single observation to be

$$r = 0''\ 2637$$

Hence, for the number of errors less than 0′′.1 the argument of Table IX A will be $\frac{0\ 1}{0\ 2637} = 0\ 3792$, and for 0.′′2, 0′′ 3, &c , the successive multiples of 0 3792 Thus, we find from the table

for 0″ 1	with arg	0 3792	the number	0 20187
" 0 2	"	0 7584	"	0 39102
" 0 3	"	1 1376	"	0 55710
" 0 4	"	1 5168	"	0 69372
" 0 5	"	1 8960	"	0 79904
" 0 6	"	2 2752	"	0 87511
" 0 7	"	2 6544	"	0 92661
" 0 8	"	3 0336	"	0 95926
" 0 9	"	3 4128	"	0 97866
" 1 0	"	3 7920	"	0 98946
		∞	"	1 00000

Subtracting each number from the following one, and multiplying the remainder by 470, the number of observations, there were found

Between	No of errors by the theory	No of errors by experience
0″ 0 and 0″ 1	95	94
0 1 " 0 2	89	88
0 2 " 0 3	78	78
0 3 " 0 4	64	58
0 4 " 0 5	50	51
0 5 " 0 6	36	36
0 6 " 0 7	24	26
0 7 " 0 8	15	14
0 8 " 0 9	9	10
0 9 " 1 0	5	7
over 1 0	5	8

The agreement between the theory and experience, th not absolute, is remarkably close The number of large e by experience exceeds that given by the theory, and this been found in other cases of a similar kind, which shows at that the extension of the limits of error to $\pm\infty$ has not i duced any error The discrepancy rather indicates a sour error of an abnormal character, and calls for some criteri which such abnormal observations may be excluded from discussions and not permitted to vitiate our results Su criterion has been proposed by Prof PEIRCE, and will be sidered hereafter

THE MEAN OF THE ERRORS, AND THE MEAN ERROR.

15 The selection of the probable error as the term of parison between different series of observations is arbi although it seems to be naturally designated by its middle tion in the series of errors There are two other errors w have been used for the same purpose

The first is the *mean of the errors*, these being all taken the positive sign In order to find its relation to the pro error, let us first consider a finite series of errors

$$\Delta, \Delta', \Delta'',$$

with the respective probabilities

$$\frac{2a}{m}, \qquad \frac{2a'}{m}, \qquad \frac{2a''}{m},$$

so that in m observations there will be $2a$ errors (numerically) equal to Δ, $2a'$ equal to Δ', &c., the probability of a positive error Δ being $\frac{a}{m}$. The mean of all these errors, each being repeated a number of times proportional to its probability, is

$$\frac{2a\Delta + 2a'\Delta' + 2a''\Delta'' + \ldots}{m} = 2\Delta\frac{a}{m} + 2\Delta'\frac{a'}{m} + 2\Delta''\frac{a''}{m} + \ldots$$

When the number of errors is infinite, the probability of an error Δ is to be understood as the probability that it falls between Δ and $\Delta + d\Delta$, which is $\varphi\Delta \cdot d\Delta$ (Art. 8), and the above formula for the mean of the errors becomes the sum of an infinite number of terms of the form $2\Delta\varphi\Delta \cdot d\Delta$. Hence, putting

$$\eta = \text{the mean of the errors,}$$

we have

$$\eta = \int_0^\infty \frac{2h}{\sqrt{\pi}}\Delta e^{-hh\Delta\Delta}\,d\Delta = \frac{1}{h\sqrt{\pi}} \tag{19}$$

or, by (18),

$$\left.\begin{aligned} \eta = \frac{r}{\rho\sqrt{\pi}} &= 1.1829\,r \\ r &= 0.8453\,\eta \end{aligned}\right\} \tag{20}$$

Another error, very commonly employed in expressing the precision of observations, is that which has received the appellation of the *mean error* (*der mittlere Fehler* of the Germans), which is not to be confounded with the above mean of the errors. Its definition is, *the error the square of which is the mean of the squares of all the errors.* Hence, putting

$$\varepsilon = \text{the mean error,}$$

we have

$$\varepsilon^2 = \int_{-\infty}^{+\infty} \frac{h}{\sqrt{\pi}}\Delta^2 e^{-hh\Delta\Delta}\,d\Delta = \frac{1}{2h^2} \tag{21}$$

or, by (18),

$$\left.\begin{aligned} \varepsilon = \frac{r}{\rho\sqrt{2}} &= 1.4826\,r \\ r &= 0.6745\,\varepsilon \end{aligned}\right\} \tag{22}$$

When we put $h = 1$, we have $\varepsilon = \sqrt{\tfrac{1}{2}}$. The mean error is, therefore, the abscissa of the point of inflection of the curve of probability (Art. 9). In the figure, p. 479, OM is the mean error,

OP the probable error, OE the mean of the errors, and Mm, Pp, Ee, their respective probabilities

THE PROBABLE ERROR OF THE ARITHMETICAL MEAN

16 The error above denoted by r is the probable error of any one of the observed values of the unknown quantity x We are next to determine the relation between this and the probable error r_0 of the arithmetical mean of these values

If Δ, Δ', Δ'' are the errors of the observed values, the most probable value of x is that which renders the probability

$$P = h^m \pi^{-\frac{1}{2}m} e^{-hh(\Delta\Delta + \Delta'\Delta' + \Delta''\Delta'' + \quad)}$$

a maximum (Art 11), and, consequently, the sum $\Delta\Delta + \Delta'\Delta' +$ a minimum But this sum is rendered a minimum by the assumption of the arithmetical mean x_0 as the most probable value (Art. 5), and hence the quantity P expresses the probability of the arithmetical mean if Δ, Δ', Δ'' are the errors of the observations when compared with this mean The probability of any other value of x, as $x_0 + \delta$, will be

$$P' = h^m \pi^{-\frac{1}{2}m} e^{-hh\{(\Delta-\delta)^2 + (\Delta'-\delta)^2 + \quad\}}$$
$$= h^m \pi^{-\frac{1}{2}m} e^{-hh\{[\Delta\Delta] - 2[\Delta]\delta + m\delta\delta\}}$$

Since $[\Delta] = \Delta + \Delta' + \Delta'' + . \quad = 0$ (Art 5), and $[\Delta\Delta] = m\varepsilon\varepsilon$ (Art 15), this expression may be put under the form

$$P' = h^m \pi^{-\frac{1}{2}m} e^{-mhh(\varepsilon\varepsilon + \delta\delta)}$$

and at the same time we have

$$P = h^m \pi^{-\frac{1}{2}m} e^{-mhh\varepsilon\varepsilon}$$

so that

$$P : P' = 1 : e^{-mhh\delta\delta}$$

that is, the probability of the error zero in the arithmetical mean is to that of the error δ as $1 : e^{-mhh\delta\delta}$ For a single observation, the probability of the error zero is to that of the error δ as $1 : e^{-hh\delta\delta}$. Hence the measure of precision (Art 10) of the single observation being h, that of the arithmetical mean of m such observations is $h\sqrt{m}$, from which follows the important

theorem that *the precision of the mean of a number of observations increases as the square root of their number* *

If, then, r is the probable error of a single observation, and r_0 that of the arithmetical mean of several observations, we must have

$$r_0 = \frac{r}{\sqrt{m}} \tag{23}$$

and from the constant relation between the mean and the probable error (22),

$$\varepsilon_0 = \frac{\varepsilon}{\sqrt{m}} \tag{24}$$

DETERMINATION OF THE MEAN AND PROBABLE ERRORS OF GIVEN OBSERVATIONS

17 The principles now explained will enable us to determine the mean errors of any given series of directly observed quantities Let n, n', n'' be the observed values, x_0 their arithmetical mean, v, v', v'' the residuals found by subtracting x_0 from each observed value so that

$$v = n - x_0, \qquad v' = n' - x_0, \qquad v'' = n'' - x_0, \text{ \&c}$$

If x_0 were certainly the true value of x, so that v, v', v'' were the actual or (as we may say) the *true* errors, and, consequently, identical with Δ, Δ', Δ'', we should have, according to the above, $m\varepsilon\varepsilon = [\Delta\Delta] = [vv]$, and hence

$$\varepsilon = \sqrt{\left(\frac{[vv]}{m}\right)}$$

and this must always give a close approximation to the value of ε But the relation $m\varepsilon\varepsilon = [\Delta\Delta]$ was deduced from a consideration of an infinite series of errors which would reduce the mean error of x_0 to an infinitesimal, according to the principles assumed, and thus make v, v', v'' identical with Δ, Δ', Δ'' A better approximation to the value of ε, where the series is limited, is to be obtained by considering the mean error of x_0 itself, and consequently, also, the mean errors of the residuals v, v', v'' If then we suppose the true value of x to be $x_0 + \delta$, we shall have the true errors

$$\Delta = v - \delta, \qquad \Delta' = v' - \delta, \qquad \Delta'' = v'' - \delta, \text{ \&c}$$

* See, in connection, Arts 21 and 25

whence, observing that $[v] = 0$,

$$[\Delta\Delta] = m\varepsilon\varepsilon = [vv] - 2\,[v]\,\delta + m\delta^2$$
$$= [vv] + m\delta^2$$

Thus the approximate value $m\varepsilon\varepsilon = [vv]$ requires the correction $m\delta^2$, the value of which depends upon the value we may ascribe to δ As the best approximation, we may assume it to be the mean error ε_0 so that, by (24),

$$m\delta^2 = m\varepsilon_0^2 = m\,\frac{\varepsilon\varepsilon}{m} = \varepsilon\varepsilon$$

which gives

$$m\varepsilon\varepsilon = [vv] + \varepsilon\varepsilon$$

whence

$$\varepsilon\varepsilon = \frac{[vv]}{m-1} \qquad \varepsilon = \sqrt{\left(\frac{[vv]}{m-1}\right)} \tag{25}$$

and consequently, also, by (22),

$$r = q\sqrt{\left(\frac{[vv]}{m-1}\right)} \qquad q = 0\ 6745 \tag{26}$$

Thus from the actual residuals the mean and the probable error of a single observed value are found. Hence, by (23) and (24), the mean and probable errors of the arithmetical mean will be found by the formulæ

$$\varepsilon_0 = \sqrt{\left(\frac{[vv]}{m\,(m-1)}\right)} \qquad r_0 = q\sqrt{\left(\frac{[vv]}{m\,(m-1)}\right)} \tag{27}$$

EXAMPLE —Let us take the following measures of the outer diameter of Saturn's ring observed by BESSEL at the Konigsberg Observatory with the heliometer, in the years 1829–1831 * The measures, denoted by n, are all reduced to the mean distance of Saturn from the sun, and are here assumed to have the same degree of precision

* *Astron Nach*, Vol XII p 169

n	v	vv
38″ 91	− 0″ 40	0 1600
39 32	+ 0 01	0001
38 93	− 0 38	1444
39 31	0 00	0000
39 17	− 0 14	0196
39 04	− 0 27	0729
39 57	+ 0 26	0676
39 46	+ 0 15	0225
39 30	− 0 01	0001
39 03	− 0 28	0784
39 35	+ 0 04	0016
39 25	− 0 06	0036
39 14	− 0 17	0289
39 47	+ 0 16	0256
39 29	− 0 02	0004
39 32	+ 0 01	0001
39 40	+ 0 09	0081
39 33	+ 0 02	0004
39 28	− 0 03	0009
39 62	+ 0 31	0961

n	v	vv
39″ 41	+ 0′ 10	0 0100
39 40	+ 0 09	0081
39 36	+ 0 05	0025
39 20	− 0 11	0121
39 42	+ 0 11	0121
39 30	− 0 01	0001
39 41	+ 0 10	0100
39 43	+ 0 12	0144
39 43	+ 0 12	0144
39 36	+ 0 05	0025
39 02	− 0 29	0841
39 01	− 0 30	0900
38 86	− 0 45	2025
39 51	+ 0 20	0400
39 21	− 0 10	0100
39 17	− 0 14	0196
39 60	+ 0 29	0841
39 54	+ 0 23	0529
39 45	+ 0 14	0196
39 72	+ 0 41	1681

$x_0 = 39\ 308$ $\qquad [vv] = 1\ 5884$

Hence, since $m = 40$, we have, by (25) and (26),

$$\varepsilon = \sqrt{\left(\frac{1\ 5884}{39}\right)} = 0''\ 202$$

$$r = 0''\ 202 \times 0\ 6745 = 0''\ 136$$

and consequently, by (23) and (24), or (27),

$$\varepsilon_0 = \frac{0''\ 202}{\sqrt{(40)}} = 0''\ 032, \qquad r_0 = \frac{0''\ 136}{\sqrt{(40)}} = 0''\ 022$$

That is, the probable error of a single observation was 0″ 136, and that of the final result $x_0 = 39''\ 308$ was only 0″ 022

18 The preceding method of finding the probable error from the squares of the residuals is that which is most commonly employed, but when the number of observations is very great, it is desirable to abridge the labor, if possible A sufficient approximation can be obtained by the use of the first powers of the residuals as follows

The number of observations being very great, we shall probably have as many positive as negative residuals If v', v'',

$v''' \ldots$ are the positive and $v_1, v_2, v_3 \ldots$ the negative residuals, and if the true value of x is $x_0 + \delta$, the true errors will be $v' - \delta, v'' - \delta, v''' - \delta \ldots$, and $-v_1 - \delta, -v_2 - \delta, -v_3 - \delta, \ldots$ *If they are all taken with the positive sign only*, the errors are, therefore,

$$v' - \delta,\ v'' - \delta,\ v''' - \delta, \qquad \text{and} \quad v_1 + \delta,\ v_2 + \delta,\ v_3 + \delta,$$

the mean of which, upon the hypothesis of an equal number of positive and negative residuals, is the same as that of the series

$$v', v'', v''' \qquad v_1, v_2, v_3$$

Hence, denoting the sum of the *numerical values* of the residuals by $[v]$, and the mean of the actual errors by η, as in Art 15, we have

$$\eta = \frac{[v]}{m}$$

and hence, by (20),

$$r = 0\ 8453\ \frac{[v]}{m} \tag{28}$$

and consequently, also, by (22),

$$\varepsilon = 1\ 2533\ \frac{[v]}{m} \tag{29}$$

In the example of the preceding article we find the mean of the residuals taken with the positive sign to be $0''\ 1555$, which by (28) gives $r = 0''\ 1555 \times 0\ 8453 = 0''\ 131$, which is perhaps a sufficient approximation to the value found above. In this example, however, we have 22 positive residuals, 17 negative ones, and 1 zero so that the hypothesis upon which the formula (28) was founded is not strictly applicable In a larger number of observations we should expect a closer agreement with the hypothesis, and more accordant results

We may, however, employ the first powers of the residuals more strictly according to the theory of probabilities In a limited series each residual is to be regarded as liable to a probable error r', and their mean is to be regarded as the mean of the errors of the residuals themselves, rather than as the mean of the errors of the observations Hence the formula

$$r' = 0\ 8453\ \frac{[v]}{m}$$

gives the probable error of a residual The relation between r' and r (= the probable error of an observed quantity n) may be found as follows Each observed n may be supposed to be the result of observing the mean quantity x_0 increased by an observed error v The probable error of $n = x_0 + v$ is, therefore (by a principle hereafter to be proved),

$$r = \sqrt{(r_0^2 + r'^2)} = \sqrt{\left(\frac{r^2}{m} + r'^2\right)}$$

whence

$$r = r' \sqrt{\frac{m}{m-1}}$$

or

$$r = 0\,8453 \frac{[v]}{\sqrt{[m\,(m-1)]}} \tag{30}$$

which agrees with the formula given by C A F PETERS * According to this formula, we find in the above example $r = 0''.133$

DETERMINATION OF THE MEAN AND PROBABLE ERRORS OF FUNCTIONS OF INDEPENDENT OBSERVED QUANTITIES.

19 Suppose, first, the most simple function of two independent observed quantities x and x_1, namely, their sum or difference

$$X = x \pm x_1$$

and let the given mean errors of x and x_1 be ε and ε_1 Although the number of observations by which x and x_1 have been found may not be given, we may assume it to have been any large number m, and the same for each of the quantities, the degrees of precision of the two series being inversely proportional to ε and ε_1 The true errors of the assumed observations may be assumed to be—

$$\text{for } x,\quad \Delta,\ \Delta',\ \Delta''$$
$$\text{for } x_1,\quad \Delta_1,\ \Delta_1',\ \Delta_1''$$

and the errors of X, consequently,

$$\Delta \pm \Delta_1, \qquad \Delta' \pm \Delta_1', \qquad \Delta'' \pm \Delta_1'',$$

Denoting the mean error of X by E, we have, by the definition,

$$\begin{aligned} mE^2 &= (\Delta \pm \Delta_1)^2 + (\Delta' \pm \Delta_1')^2 + (\Delta'' \pm \Delta_1'')^2 + \\ &= [\Delta\Delta] \pm 2\,[\Delta\Delta_1] + [\Delta_1\Delta_1] \end{aligned}$$

* *Astron Nach*, Vol XLIV p 32

In a great number of observations there must be as many positive as negative products of the form $\Delta\Delta_1$, and such that we shall probably have $[\Delta\Delta_1] = 0$, and since we also have $m\varepsilon^2 = [\Delta\Delta]$, $m\varepsilon_1^2 = [\Delta_1\Delta_1]$, this equation gives

$$E^2 = \varepsilon^2 + \varepsilon_1^2 \tag{31}$$

If we have

$$X = x \pm x_1 \pm x_2$$

and the mean errors of x, x_1, x_2 are ε, ε_1, ε_2, we have by the preceding equation the mean error of $x \pm x_1 = \sqrt{(\varepsilon^2 + \varepsilon_1^2)}$, and by a second application of the same equation, considering $x \pm x_1$ as a single quantity, the mean error of X will be found by the formula

$$E^2 = \varepsilon^2 + \varepsilon_1^2 + \varepsilon_2^2 \tag{31*}$$

and the same principle may be thus extended to the algebraic sum of any number of observed quantities

In consequence of the constant relation (22), if r, r_1, r_2 are the *probable* errors of x, x_1, x_2 and R the probable error of $X = x \pm x_1 \pm x_2 .$, we shall have

$$R^2 = r^2 + r_1^2 + r_2^2 + \tag{32}$$

EXAMPLE 1 —The zenith distance of a star observed in the meridian is

$$\zeta = 21° \ 17' \ 20'' \ 3 \quad \text{with the mean error } \varepsilon = 2'' \ 3$$

and the declination of the star is given

$$\delta = 19° \ 30' \ 14'' \ 8 \quad \text{with the mean error } \varepsilon_1 = 0'' \ 8$$

Required the mean error E of the latitude of the place of observation, found by the formula $\varphi = \zeta + \delta$ We have, by (31),

$$E = \sqrt{[(2\ 3)^2 + (0\ 8)^2]} = 2'' \ 44$$

Hence

$$\varphi = 40° \ 47' \ 35'' \ 1 \quad \text{with the mean error } E = 2'' \ 44$$

EXAMPLE 2 —The latitude of a place has been found with the mean error $\varepsilon = 0'' \ 25$, and the meridian zenith distance of stars observed at that place with a certain instrument has been found to be subject to the mean error $\varepsilon_1 = 0'' \ 62$ what is the mean

error E of the declinations of the stars deduced by the formula $\delta = \varphi - \zeta$? We have

$$E = \sqrt{[(0\ 25)^2 + (0\ 62)^2]} = 0''\ 67$$

20 Let us next consider the function

$$X = ax$$

and suppose x has been observed with the mean error ε, and a is a given constant Every observation of x with the error $\pm \Delta$ gives X with the error $\pm a\Delta$ so that the mean error of X must be

$$E = a\varepsilon$$

In general, by combining this with the preceding principle, if we have

$$X = ax + a_1x_1 + a_2x_2 +$$

and if the mean errors of x, x_1, x_2 ... are ε, ε_1, ε_2, ... , and E that of X, we shall have

$$E^2 = a^2\varepsilon^2 + a_1^2\varepsilon_1^2 + a_2^2\varepsilon_2^2 + \qquad = [a^2\varepsilon^2] \tag{33}$$

and the same form may be used for probable errors.

EXAMPLE —As an example illustrating the application of both the preceding principles, suppose that in order to find the rate of a chronometer we find at the time t its correction $+ 12^m\ 13^s\ 2$ with the mean error $0^s\ 3$, and at the time t' the correction $+ 12^m\ 21^s\ 4$ with the same mean error $0^s\ 3$, and the interval $t' - t = 10$ days. The rate in the whole interval is

$$12^m\ 21^s\ 4 - 12^m\ 13^s\ 2 = + 8^s\ 2$$

with the mean error, according to Art. 19,

$$\sqrt{[(0\ 3)^2 + (0\ 3)^2]} = 0^s\ 42$$

The mean daily rate is then

$$+ \frac{8^s\ 2}{10} = + 0^s\ 82$$

with the mean error, according to Art 20,

$$\frac{0^s\ 42}{10} = 0^s\ 042$$

21 If x, x_1, x_2 . are the several observed values of the *same* quantity, their arithmetical mean being

$$x_0 = \frac{1}{m}(x + x_1 + x_2 + \quad)$$

and if r is the probable error of each observation, what is the probable error r_0 of x_0? By Art 19, the probable error of the sum $x + x_1 + x_2 +$. is

$$\sqrt{(r^2 + r^2 + r^2 + \quad)} = \sqrt{(mr^2)} = r\sqrt{m}$$

and the probable error of $\frac{1}{m}$th of the sum is, by Art. 20,

$$r_0 = \frac{1}{m} \times r\sqrt{m} = \frac{r}{\sqrt{m}}$$

as has been otherwise proved in Art 16

22. Let us now take the general case in which X is any function whatever of the observed quantities x, x_1, x_2, expressed by

$$X = f(x, x_1, x_2, \quad)$$

Let the variables be expressed in the form

$$x = a + x', \qquad x_1 = a_1 + x_1', \qquad x_2 = a_2 + x_2',$$

a, a_1, a_2 . being arbitrarily assumed very nearly equal to x, x_1, x_2 respectively, and such that x', x_1', x_2' . . may be so small that their squares will be insensible The given mean errors ε, ε_1, ε_2 may then be regarded as the mean errors of x', x_1', x_2' ... The function X developed by TAYLOR's theorem is

$$X = f(a, a_1, a_2 \quad) + \frac{dX}{dx}x' + \frac{dX}{dx_1}x_1' + \frac{dX}{dx_2}x_2' + \ldots$$

and the mean error of X will be that of the quantity

$$\frac{dX}{dx}x' + \frac{dX}{dx_1}x_1' + \frac{dX}{dx_2}x_2' +$$

or, by (33),

$$E^2 = \left(\frac{dX}{dx}\right)^2 \varepsilon^2 + \left(\frac{dX}{dx_1}\right)^2 \varepsilon_1^2 + \left(\frac{dX}{dx_2}\right)^2 \varepsilon_2^2 + \tag{34}$$

or, if r, r_1, r_2 . . . are the probable errors of x, x_1, x_2 . . ., and R that of X,

$$R^2 = \left(\frac{dX}{dx}\right)^2 r^2 + \left(\frac{dX}{dx_1}\right)^2 r_1^2 + \left(\frac{dX}{dx_2}\right)^2 r_2^2 + \qquad (34^*)$$

This formula is, indeed, but approximative, since we have neglected the terms involving the higher powers in the development of X, but the mean errors of these small terms will be insensible if we suppose that the errors $\varepsilon, \varepsilon_1, \varepsilon_2$ . . . are so small that the differences between the observed values x, x_1, x_2 . . . and the true values are of the same order as the quantities x', x_1', x_2' . . ., which will always be the case where proper care has been taken to reduce the accidental errors of observation to their smallest amount. If the given function is implicit, as

$$0 = f(X, x, x_1, x_2 \ldots)$$

we should still by differentiation obtain the differential coefficients, and then find the mean error of X by (34).

EXAMPLE.—The local apparent time at a place in latitude $\varphi = 38° \; 58' \; 53''$ was found (Vol. I. Art. 145) from the sun's zenith distance $\zeta = 73° \; 12' \; 25''$, when the declination was $\delta = -22° \; 50' \; 27''$, to be $t = 2^h \; 47^m \; 39^s.4$. What is the probable error of this result, supposing the probable errors of the data to be—

$$\begin{array}{llll} \text{Probable error of} & \varphi & = r & = 0''.5 \\ \text{"} \quad \text{"} & \delta & = r_1 & = 0 .6 \\ \text{"} \quad \text{"} & \zeta & = r_2 & = 3 .5 \end{array}$$

The formula

$$0 = -\cos\zeta + \sin\varphi \sin\delta + \cos\varphi \cos\delta \cos t$$

expresses t as an implicit function of φ, δ, and ζ. We find (Vol. I. Art. 35)

$$\frac{dt}{d\varphi} = -\frac{1}{\cos\varphi \tan A}$$

$$\frac{dt}{d\delta} = \frac{1}{\cos\delta \tan q}$$

$$\frac{dt}{d\zeta} = \frac{1}{\cos\varphi \sin A}$$

where A is the azimuth and q the parallactic angle We find from the data $A = + 40° 1'$, $q = 32° 51'$, whence

$$\frac{dt}{d\varphi} = - 1\,532, \qquad \frac{dt}{d\delta} = 1\,680, \qquad \frac{dt}{d\zeta} = + 2\,001$$

and the probable error of t is, by (34*)

$$R = \sqrt{[(0\,5 \times 1\,532)^2 + (0\,6 \times 1\,680)^2 + (3\,5 \times 2\,001)^2]} = 7''\,12$$

or, in seconds of time,

$$R = 0^s\,47$$

23. To complete this branch of our subject, it is to be observed that the preceding demonstrations apply only to the case where the quantities entering into combination are independent, but when they are merely different functions of the same observed quantities, the above formulæ are incomplete Let us suppose that we have X and X', different functions of the same observed quantities x, x_1, x_2, . . , or

$$\begin{aligned} X &= f\,(x, x_1, x_2, \ldots) \\ X' &= f'(x, x_1, x_2, \ldots) \end{aligned}$$

the mean errors of x, x_1, x_2 being ε, ε_1, ε_2 , and that we wish to find the mean error E of the function,

$$Y = F(X, X')$$

If any single observation of x, x_1, x_2 is affected by an error δ, δ_1, δ_2, . respectively, the corresponding errors in X and X' will be—

$$\begin{aligned} \text{Error in } X, \quad \Delta &= a\delta + a_1\delta_1 + a_2\delta_2 + \\ \text{“} \qquad X', \quad \Delta' &= a'\delta + a_1'\delta_1 + a_2'\delta_2 + \end{aligned}$$

in which a, a_1, a_2 . are the differential coefficients of X, and a', a_1', a_2' the differential coefficients of X', with reference to x, x_1, x_2, . The corresponding error in Y will be

$$\Delta'' = A\Delta + A'\Delta'$$

in which A and A' are the differential coefficients of Y with reference to X and X' The square of the mean error E will be

the mean of the squares of all the values of Δ'' which result from all the possible values of δ, δ_1, δ_2

Substituting the values of Δ and Δ', we have

$$\Delta'' = (Aa + A'a')\,\delta + (Aa_1 + A'a_1')\,\delta_1 + \cdots$$

which we may briefly express as follows

$$\Delta'' = \alpha\delta + \beta\delta_1 + \gamma\delta_2 +$$

If the number of values of Δ'' is denoted by m, the mean of all the values of Δ''^2 will be

$$\frac{[\Delta''^2]}{m} = \alpha^2\frac{[\delta^2]}{m} + \beta^2\frac{[\delta_1^2]}{m} + \gamma^2\frac{[\delta_2^2]}{m} + \quad .$$

$$+ 2\,\alpha\beta\frac{[\delta\delta_1]}{m} + 2\,\alpha\gamma\frac{[\delta\delta_2]}{m} +$$

In consequence of the various signs of $\delta\delta_1$, $\delta\delta_2$, &c, the mean value of each of these quantities will be zero, and the mean values of δ^2, δ_1^2, &c are ε^2, ε_1^2, &c Hence the formula becomes simply

$$E^2 = (Aa + A'a')^2\varepsilon^2 + (Aa_1 + A'a_1')^2\varepsilon_1^2 +$$

or

$$\left.\begin{aligned} E^2 = A^2(a^2\varepsilon^2 + a_1^2\varepsilon_1^2 + \quad) + A'^2(a'^2\varepsilon^2 + a_1'^2\varepsilon_1^2 + \quad) \\ + 2\,AA'(aa'\varepsilon^2 + a_1a_1'\varepsilon_1^2 + \quad \end{aligned}\right\} \quad (35)$$

To illustrate by a very simple example, let

$$X = 2x \qquad X' = 3x$$

and suppose $\varepsilon = 0.1$, then, to find the mean error E of

$$Y = X + X'$$

we cannot take $E = \sqrt{[(0\ 2)^2 + (0\ 3)^2]}$ as we should if X and X' were independent, but by the above formula we must take

$$E = \sqrt{[(0\ 2)^2 + (0\ 3)^2 + 2 \times 2 \times 3 \times (0\ 1)^2]} = 0\ 5$$

as in fact we find directly, in this simple case, by first substituting in Y the values of X and X'.

WEIGHT OF OBSERVATIONS

24 Observations of the same kind are said to have the same or different weight according as they have the same or different mean (or probable) errors We assume *a priori* that observations will have the same weight when they are made under precisely the *same circumstances*, including under this designation every thing that can affect the observations, but whether this condition has in any case been realized can only be learned, *a posteriori*, from the mean errors revealed by the observations themselves

In order to obtain a numerical expression of the weight, let us suppose all our observations to be compared with a standard fictitious observation the mean error of which is any assumed quantity ε_1 Let the actual observations be subject to the mean error ε Let it require a number p of standard observations to be combined in order to reduce the mean error of their arithmetical mean to that of an actual observation, that is, to ε, or, according to (24), let

$$\varepsilon = \frac{\varepsilon_1}{\sqrt{p}} \qquad \text{or} \qquad p\varepsilon^2 = \varepsilon_1^2 \tag{36}$$

then one of our actual observations is as good, that is, has the same weight, as p standard observations, and the number p may be used to denote that weight If, in like manner, other observations of the same kind are subject to the mean error ε', and we have

$$p'\varepsilon'^2 = \varepsilon_1^2$$

one of these observations has the weight of p' standard observations, and the weights of the observations of the two actual series may be compared by means of the numbers p and p' The weight of the fictitious observation is here the *unit of weight*, but this unit is altogether arbitrary, since it is only the *relative* weights of actual determinations that are to be considered

It follows immediately, since we have

$$\varepsilon_1^2 = p\varepsilon^2 = p'\varepsilon'^2$$

or

$$\frac{p}{p'} = \frac{\varepsilon'^2}{\varepsilon^2} \tag{37}$$

that *the weights of two observations are reciprocally proportional to the squares of their mean errors*

The measure of precision (Art 10) and the weight are to be distinguished from each other the former varies inversely as the mean error, the latter inversely as the square of this error

25 *To find the most probable mean of a number of observations of different weights* —Let n', n'', n''' be the given observed values, p', p'', p''' their respective weights By the preceding definition of the weight, the quantity n' may be considered as the mean of p' observations of the weight unity, n'' as the mean of p'' observations of the weight unity, &c We may, therefore, conceive the given series of observed quantities resolved into a series of standard observations, all of equal weight, and then apply to the latter series the principle of the arithmetical mean The whole number of equivalent standard observations will be $p' + p'' + p''' +$, the sum of the p' standard observations will be $p'n'$, the sum of the p'' standard observations will be $p''n''$, &c hence the desired mean x_0 will be

$$x_0 = \frac{p'n' + p''n'' + p'''n''' +}{p' + p'' + p''' +} \tag{38}$$

or, more briefly,

$$x_0 = \frac{[pn]}{[p]} \tag{38*}$$

This formula shows that although the above demonstration implies that p', p'', p''' are whole numbers, yet any numbers, whole or fractional, may be used which are in the same proportion, for f being any arbitrary factor, whole or fractional, we may write for (38) the following

$$x_0 = \frac{fp'n' + fp''n'' + fp'''n''' +}{fp' + fp'' + fp''' +}$$

and then fp', fp'', fp''' may be regarded as the weights

The value of x_0 is here an arithmetical mean only in the conventional sense implied in the substitution of fictitious observations with uniform weights for the given observations It may be called the *general mean*, the *probable mean* or the *mean by weights*

The weight of this general mean, referred to the unit of p', p'', is $= p' + p'' + p''' +$.

The mean error of the general mean will be expressed by

$$\varepsilon_0 = \frac{\varepsilon_1}{\sqrt{(p' + p'' + p''' + \quad)}} = \frac{\varepsilon_1}{\sqrt{[p]}}$$

where ε_1 is the mean error corresponding to the unit of weight

If ε_1 is not given, we shall have to find it from the observations themselves Taking the difference between x_0 and each of the given quantities, we have the residuals

$$v' = n' - x_0, \qquad v'' = n'' - x_0, \qquad v''' = n''' - x_0,$$

If $\varepsilon', \varepsilon'', \varepsilon'''$. are respectively the mean errors of $n', n'', n''', \ldots .$ we shall have, as in Art 17,

$$\varepsilon'^2 = v'v' + \varepsilon_0^2$$

whence

$$p'\varepsilon'^2 = \varepsilon_1^2 = p'v'v' + p'\varepsilon_0^2$$

and, in like manner,

$$\begin{gathered} \varepsilon_1^2 = p''v''v'' + p''\varepsilon_0^2 \\ \varepsilon_1^2 = p'''v'''v''' + p'''\varepsilon_0^2 \\ \&c \end{gathered}$$

The number of given values n', n'' being $= m$, the sum of these equations is

$$m\varepsilon_1^2 = [pvv] + [p]\,\varepsilon_0^2$$

which combined with the above value of ε_0 gives

$$\varepsilon_1 = \sqrt{\left(\frac{[pvv]}{m-1}\right)} \tag{39}$$

and consequently, also,

$$\varepsilon_0 = \sqrt{\left(\frac{[pvv]}{(m-1)\,[p]}\right)} \tag{40}$$

Example —Let us suppose that the observations of Saturn's ring in Art 17 had been given as in the following table, where the mean of the first seven observations of Art 17 is given $= 39''$ 179 with the weight $= 7$, the mean of the next following four $= 39''.285$ with the weight $= 4$, &c.

p	n	v	vv	pvv
7	39″ 179	−0″ 129	016641	1165
4	285	−0 023	529	21
5	294	−0 014	196	10
4	407	+0 099	9801	392
1	410	+0 102	10404	104
3	320	+0 012	144	4
3	377	+0 069	4761	143
4	310	+0 002	4	0
3	127	−0 181	32761	983
6	448	+0 140	19600	1176
$[p] = 40$	$x_0 = 39$ 308			$[pvv] =$ 3998

Here the general mean x_0 found by (38) of course agrees with that found before For the mean error corresponding to the unit of weight (which in this case is that of an observation as given in Art 17), we have, by (39), since $m = 10$,

$$\epsilon_1 = \sqrt{\left(\frac{3998}{9}\right)} = 0''\,211$$

and for the mean error of x_0, by (40),

$$\epsilon_0 = \sqrt{\left(\frac{3998}{9 \times 40}\right)} = 0''\,033$$

which agree sufficiently well with the former values A perfect agreement in the mean errors is not to be expected, since our formulæ are based upon the supposition that we have taken a sufficient number of observations to exhibit the several errors to which they are subject in the proportion of their respective probabilities, and this would require a very large number of observations

26 In the application of the preceding formulæ, it must be observed that when the weights of different determinations of the same quantity are inferred from their mean errors, we must be certain that there are no constant errors (that is, constant during the observations which compose a single determination) before we can combine them together according to these weights, unless the constant errors are known to affect all the determina-

tions equally and with the same sign For example, if ten measures of the zenith distance of a star are made at one culmination, giving a mean error of 0″ 4, and five measures at another, giving a mean error of 0″ 8, the weights according to these errors would be as 4 to 1 But if it is known that the errors *peculiar to a culmination* (and affecting equally all the individual observations at that culmination) exceed 1″, it would be better to regard the observations as of the same weight, since there would be a greater probability of eliminating such peculiar errors by taking the simple arithmetical mean If, however, the observer, from considerations independent of the observations, can estimate the weight of determinations made under different circumstances, then it is evident that these weights will serve for the combination, if the mean accidental errors of the several determinations are sensibly equal

But if from the different circumstances we have deduced weights for the several determinations, and at the same time the mean errors (deduced from a discussion of the discrepancies of the observations composing each determination) are widely different, it is not easy to assign any general rule for reducing the weights which shall not be subject to some exceptions In such cases, practical observers and computers have resorted to empirical formulæ, involving some arbitrary considerations, more or less plausible

In many cases we can proceed satisfactorily as follows Let

$\varepsilon =$ the mean accidental error of a single observation,
$\eta =$ the mean error peculiar to a determination which rests upon m such observations,
$e =$ the total mean error of such a determination,

then, ε and η being supposed to be independent, we shall have

$$e^2 = \frac{\varepsilon^2}{m} + \eta^2 \tag{41}$$

If then η can be obtained from independent considerations, this formula will give the value of e, and, consequently, the weight for each determination, and the combination may then be made by (38) For an example of a discussion according to these principles, see Vol I. Art 236

INDIRECT OBSERVATIONS

27 I proceed now to the application of the method of least squares to the solution of the general problem of determining the most probable values of any number of unknown quantities of which the observed quantities are functions The observations are then said to be *indirect* The particular case of direct observations, already considered, is, however, included in this general problem, being the case in which the number of unknown quantities is reduced to one, and this one is directly observed

The general problem embraces two classes of problems, which must be distinguished from each other In the first class, the unknown quantities are *independent*, in the sense that they are subject to no conditions except those established by the observations so that, *before taking the observations*, any assumed system of values of these quantities has the same probability as any other system In the second class, there are assigned, *a priori*, certain conditions which the unknown quantities must satisfy at the same time that they satisfy (as nearly as possible) the conditions established by the observations Thus, for example, if the three angles of a plane triangle are to be determined from observations of any kind, we have, *a priori*, the condition that the sum of these angles must be equal to two right angles, and all the systems of values which do not satisfy this condition are excluded at the outset This class will be briefly considered hereafter, under the head of "conditioned observations," but our attention will be chiefly directed to the first class, which includes most of the problems occurring in astronomical inquiries

Again, the equations which the observations are to satisfy may be *linear* or *non-linear*, the observed quantities may be *explicit* or *implicit* functions of the required quantities, but, for simplicity, we consider first the case of linear equations, to which all the others may always be reduced

EQUATIONS OF CONDITION FROM LINEAR FUNCTIONS

28 Let us suppose the equations between the known and unknown quantities are of the form

$$ax + by + cz + \qquad + l = V$$

in which a, b, c, . . l are known quantities given by theory for each observation, V is the quantity observed, and x, y, z . . are the quantities to be determined. For each observation, we have a similar equation, and thus a system such as the following:

$$\left.\begin{array}{l} a'x + b'y + c'z + \quad\quad + l' = V' \\ a''x + b''y + c''z + \quad\quad + l'' = V'' \\ a'''x + b'''y + c'''z + \quad\quad + l''' = V''' \\ \quad\quad \&c \quad\quad\quad\quad\quad\quad \&c \end{array}\right\} \quad (42)$$

the number of these equations being greater than that of the unknown quantities (Art. 6). If our observations were perfect, all these equations would be satisfied by the same system of values of x, y, z . . , but, being imperfect, let M', M'', M''' . . denote the values obtained by observation for V', V'', V'''. . . When these values are substituted in the second members of (42), there will, in general, be no system of values of x, y, z . . which satisfies all the equations at the same time, and we can only determine that system which is rendered most probable by the observations. Let us therefore denote by N', N'', N''' . . the values which the first members of our equations obtain when any hypothetical or assumed system of values of x, y, z . . is substituted in them, and put

$$v' = N' - M', \qquad v'' = N'' - M'', \qquad v''' = N''' - M''',$$

then v', v'', v''' . . are the errors of the observations according to this hypothesis. Finally, let us put

$$n' = l' - M', \qquad n'' = l'' - M'', \qquad n''' = l''' - M''',$$

then our equations may be thus expressed

$$\left.\begin{array}{l} a'x + b'y + c'z + \quad\quad + n' = v' \\ a''x + b''y + c''z + \quad\quad + n'' = v'' \\ a'''x + b'''y + c'''z + \quad\quad + n''' = v''' \\ \quad\quad \&c \quad\quad\quad\quad\quad\quad \&c \end{array}\right\} \quad (43)$$

If our observations were perfect, we should be able to find values of x, y, z . . which would reduce all the quantities v', v'', v'''. . . to zero. It is usual, therefore, to write zero in the second members.

$$\left.\begin{array}{l} a'x + b'y + c'z + \quad\quad + n' = 0 \\ a''x + b''y + c''z + \quad\quad + n'' = 0 \\ a'''x + b'''y + c'''z + \quad\quad + n''' = 0 \\ \quad\quad \&c \quad\quad\quad\quad\quad\quad \&c \end{array}\right\} \quad (43^*)$$

and these are called the *equations of condition*, since they express the conditions which the unknown quantities are required to satisfy as nearly as possible We may, however, with more rigor regard (43) as our equations of condition, and treat them as expressing the general condition that the unknown quantities shall be such as to give the most probable system of errors v', v'', v'''

Now, according to Art 11, the most probable system of values of x, y, z (and, consequently, the most probable system of errors) is that which makes the sum of the squares of the errors a minimum thus, we are to reduce to a minimum the function

$$[vv] = v'v' + v''v'' + v'''v''' +$$

Regarding $[vv]$ as a function of the variables x, y, z (which we must remember are here independent), the condition of minimum requires that its derivatives taken with reference to each variable shall each be zero, that is,

$$\frac{d\,[vv]}{dx} = 0, \qquad \frac{d\,[vv]}{dy} = 0, \qquad \frac{d\,[vv]}{dz} = 0,$$

or

$$\left.\begin{array}{l} v'\dfrac{dv'}{dx} + v''\dfrac{dv''}{dx} + v'''\dfrac{dv'''}{dx} + \qquad = 0 \\ v'\dfrac{dv'}{dy} + v''\dfrac{dv''}{dy} + v'''\dfrac{dv'''}{dy} + \qquad = 0 \\ v'\dfrac{dv'}{dz} + v''\dfrac{dv''}{dz} + v'''\dfrac{dv'''}{dz} + \qquad = 0 \\ \qquad \&c \end{array}\right\} \qquad (44)$$

(which we might have obtained directly from (10) by substituting $\varphi' \varDelta = k\varDelta = kv$, and dividing by the constant k) But, by differentiating the equations (43) with reference to x, y, z ... successively, we have

$$\begin{array}{lll} \dfrac{dv'}{dx} = a', & \dfrac{dv'}{dy} = b', & \dfrac{dv'}{dz} = c', \ldots \\ \dfrac{dv''}{dx} = a'', & \dfrac{dv''}{dy} = b'', & \dfrac{dv''}{dz} = c'', \ldots \\ \&c & \&c & \&c \end{array}$$

so that (44) are the same as the following:

$$\left.\begin{array}{ll} a'v' + a''v'' + a'''v''' + & = 0 \\ b'v' + b''v'' + b'''v''' + & = 0 \\ c'v' + c''v'' + c'''v''' + & = 0 \\ \&c & \end{array}\right\} \qquad (44^*)$$

The number of these equations is the same as that of the unknown quantities, and if we now substitute in them the values of v', v'', v''' from (43), we have the final or, as we shall call them, the *normal* equations, which determine the most probable values of x, y, z

NORMAL EQUATIONS

29 We see by (44*) that to form the first normal equation we multiply each of the equations of condition (43) or (43*) by the coefficient of x in that equation, and then form the sum of all the equations thus multiplied The resulting equation is called the normal equation in x * The sum of the equations of condition severally multiplied by the coefficients of y is the normal equation in y, &c To abbreviate the expression of these sums, we put

$$\begin{array}{l} [aa] = a'a' + a''a'' + a'''a''' + \\ [ab] = a'b' + a''b'' + a'''b''' + \\ [ac] = a'c' + a''c'' + a'''c''' + \\ \qquad \&c \qquad\qquad \&c \end{array}$$

then the normal equations are

$$\left.\begin{array}{ll} [aa]\,x + [ab]\,y + [ac]\,z + & + [an] = 0 \\ [ab]\,x + [bb]\,y + [bc]\,z + & + [bn] = 0 \\ [ac]\,x + [bc]\,y + [cc]\,z + & + [cn] = 0 \\ \qquad \&c & \&c \end{array}\right\} \qquad (45)$$

30. The formation of such normal equations is one of the most laborious parts of the computations involved in the method of least squares, especially when the number of equations is very great † It is important to have a means of verification, or "control," to insure their accuracy, before proceeding with the next important process of elimination A very simple and effective control is the following

* The "normal equation in x" is so called because it is the equation which determines the most probable value of x when the other variables are reduced to zero, or when x is the only unknown quantity, and so of the others

† This labor may be abridged by the use of Dr CRELLE's *Rechentafeln*, Berlin, 1869

Form the sums of the coefficients of the unknown quantities in the several equations, namely,

$$\left.\begin{array}{l} a' + b' + c' + \quad = s' \\ a'' + b'' + c'' + \quad = s'' \\ a''' + b''' + c''' + \quad = s''' \\ \quad\quad \&c \end{array}\right\} \tag{46}$$

If we multiply each of these by its n, and add the products, we have

$$[an] + [bn] + [cn] + \quad = [sn] \tag{47}$$

Also, multiplying each of (46) by its a, and adding, then each by its b, and adding, and so on, we have

$$\left.\begin{array}{l} [aa] + [ab] + [ac] + \quad = [as] \\ [ab] + [bb] + [bc] + \quad = [bs] \\ [ac] + [bc] + [cc] + \quad = [cs] \\ \quad\quad \&c \end{array}\right\} \tag{48}$$

The equations (47) must be satisfied when the absolute terms of the normal equations are correct, and (48) when the coefficients of the unknown quantities are correct

31 The normal equations will give determinate values of x, y, z , provided they are really independent If, however, any two of them become identical by the multiplication of either of them by a constant, the number of independent equations is, in fact, one less than that of the unknown quantities, and the problem becomes indeterminate This difficulty does not arise from the method by which the normal equations are formed, but from the nature of the given equations of condition. In any such case, additional observations are necessary, for which the coefficients have such varied values as to lead to independent equations Even when two equations cannot be reduced precisely to a single one by the introduction of a constant factor, if they can be made very nearly identical, the problem is still practically indeterminate The indetermination will become evident in the actual elimination in practice when any one of the unknown quantities comes out with so small a coefficient that small errors in the observations would greatly change this coefficient. (See Art 52)

32 By whatever method the elimination is performed, we shall necessarily arrive at the same final values of the unknown quantities, but, when the number of equations is considerable, the method of substitution, with GAUSS's convenient notation, is universally followed, but, for the present, leaving the reader to choose his method, I proceed to explain the principles by which the mean errors of the values of x, y, z are determined

MEAN ERRORS AND WEIGHTS OF THE UNKNOWN QUANTITIES

33 Since we have put $n' = l' - M', n'' = l'' - M''$, &c (Art 28), the mean error of n', n'', n''' is also that of M', M'', M''', , that is, the mean error of n', n'', n'''. is to be regarded as the mean error of an observation If the elimination of the normal equations were fully carried out, each unknown quantity would be finally expressed as a linear function of n', n'', n''', , and the mean errors of the latter being given, those of the unknown quantities would follow by the principle of Art 20 It results, however, from the symmetry of the normal equations that several forms may be obtained for computing directly the weights of the unknown quantities, and from these weights the mean errors can afterwards be found

34 *First method of computing the weights of the unknown quantities* —For simplicity, let us first suppose all the observations to be of equal weight, or the mean errors of n', n'', n''' to be equal. Let

ε = the mean error of an observation,

ε_x = the mean error of the value of x found from the normal equations,

p_x = the weight of the value of x, the weight of an observation being unity,

then (Art. 24)

$$p_x = \frac{\varepsilon^2}{\varepsilon_x^2}$$

Now, let us suppose the elimination to be performed by the method of indeterminate coefficients Let the first equation of (45) be multiplied by Q, the second by Q', the third by Q'', &c , and the products added Then let the factors Q, Q', Q'' (whose number is the same as that of the unknown quantities) be supposed to be determined so that in this final equation the coefficients of all the unknown quantities shall be zero, except

that of x, which shall be unity The conditions for determining these factors are, therefore,

$$\left.\begin{array}{l} [aa]\,Q + [ab]\,Q' + [ac]\,Q'' + \quad = 1 \\ [ab]\,Q + [bb]\,Q' + [bc]\,Q'' + \quad = 0 \\ [ac]\,Q + [bc]\,Q' + [cc]\,Q'' + \quad = 0 \\ \quad \&c \qquad\qquad\qquad \&c \end{array}\right\} \tag{49}$$

and the final equation in x is

$$x + [an]\,Q + [bn]\,Q' + [cn]\,Q'' + \quad = 0 \tag{50}$$

Comparing (45) and (49), we see that the coefficients of Q, Q', Q'' are the same as those of x, y, z, but that the absolute terms are -1 in (49) instead of $[an]$ in (45), and zero instead of $[bn]$, $[cn]$, &c Hence, if the elimination of (45) were carried out, and the values of x, y, z determined in terms of n', n'', n''' . , the values of Q, Q', Q''. . would be found from these by merely putting $[an] = -1$, and $[bn] = [cn]$, &c $= 0$. This is also evident from (50) I shall now show that Q is the reciprocal of the required weight of x

The final value of x being a linear function of n', n'', n'''. , the equation (50) may be supposed to be developed in the form

$$x + \alpha' n' + \alpha'' n'' + \alpha''' n''' + \quad = 0 \tag{51}$$

in which $\alpha', \alpha'', \alpha'''$, are functions of a', b', . , a'', b'', . . , &c , and these functions are immediately found by developing $[an]$, $[bn]$, &c , in (50), for we then have, by comparing the coefficients of (50) and (51),

$$\left.\begin{array}{l} \alpha' = a'\,Q + b'\,Q' + c'\,Q'' + \\ \alpha'' = a''\,Q + b''\,Q' + c''\,Q'' + \\ \alpha''' = a'''\,Q + b'''\,Q' + c'''\,Q'' + \\ \qquad \&c \qquad\qquad \&c \end{array}\right\} \tag{52}$$

Multiplying each of these equations by its a, and adding all the products, we obtain, by (49),

$$a'\alpha' + a''\alpha'' + a'''\alpha''' + \quad = 1$$

Multiplying each of (52) by its b, and adding, we obtain, by (49),

$$b'\alpha' + b''\alpha'' + b'''\alpha''' + \quad = 0$$

and so on for as many equations as there are unknown quantities These relations are briefly expressed thus

$$[a\alpha] = 1 \qquad [b\alpha] = 0 \qquad [c\alpha] = 0,\ \&c \tag{53}$$

If, then, each of (52) is multiplied by its α, and the results are added, we find, by (53),

$$[\alpha\alpha] = \alpha'^2 + \alpha''^2 + \alpha'''^2 + \quad = Q \tag{54}$$

But, by Art. 20, when ε is the mean error of each of the quantities n', n'', n''', , the mean error of x found by (51) is

$$\varepsilon_x = \varepsilon \sqrt{[\alpha\alpha]}$$

Hence

$$p_x = \frac{\varepsilon^2}{\varepsilon_x^2} = \frac{1}{[\alpha\alpha]} = \frac{1}{Q} \tag{55}$$

as was to be proved.

Hence we have a first method of finding the weights *In the first normal equation write* -1 *for the absolute term* $[an]$, *and in the other equations zero for each of the absolute terms* $[bn]$, $[cn]$, &c , *the value of* x *then found from these equations will be the reciprocal of the weight of the value of* x *found by the general elimination*

This rule is to be applied to each of the unknown quantities in succession, so that the reciprocal of the weight of y is that value of y which will be found by putting $[bn] = -1$, and $[an] = [cn] =$ &c $= 0$, the reciprocal of the weight of z is that value of z which will be found by putting $[cn] = -1$, and $[an] = [bn]$, &c $= 0$; &c

It is evident, moreover, that although we have deduced the rule by the use of indeterminate multipliers, it must hold good whatever method of elimination is adopted

35. *Second method of computing the weights of the unknown quantities* —If we write the normal equations thus,

$$\begin{aligned}
&[aa]\, x + [ab]\, y + [ac]\, z + \quad + [an] = A \\
&[ab]\, x + [bb]\, y + [bc]\, z + \quad + [bn] = B \\
&[ac]\, x + [bc]\, y + [cc]\, z + \quad + [cn] = C \\
&\qquad\qquad \text{\&c} \qquad\qquad\qquad \text{\&c}
\end{aligned}$$

and perform the elimination, we shall obtain x, y, z in terms of $[aa]$, $[ab]$, &c , and of A, B, C, &c , and if in the general values thus found we make $A = B = C$, &c $= 0$, these values will be reduced to those which would be found by carrying out the elimination with zero in the second members of the normal equations If we suppose the elimination performed by means

of the indeterminate factors Q, Q', Q'' already employed, the final equation for determining x will be

$$x + [an]Q + [bn]Q' + [cn]Q'' + \quad = QA + Q'B + Q''C +$$

where the coefficient of A is the reciprocal of the required weight of x But, whatever method of elimination is employed, the coefficient of A in this general value of x will necessarily be the same, and hence we derive the second method of determining the weights *Write A, B, C, &c, instead of 0, in the second members of the normal equations, and carry out the elimination* (by any method at pleasure), *then the final values of x, y, z . are those terms in the general values which are independent of A, B, C . , the weight of x is the reciprocal of the coefficient of A in the general value of x, the weight of y is the reciprocal of the coefficient of B in the general value of y,* &c

36 *Third method of computing the weights of the unknown quantities.*—Let us suppose the elimination to be performed by the method of substitution, still retaining A, B, C in the second members, as in the preceding article The final equation in x, according to this method, is found by substituting in the first normal equation the values of y, z . given by the other equations These substitutions do not affect the coefficient of A, which remains unity, so long as no reduction is made after the substitutions. Thus, the final equation in x is of the form

$$Rx = T + A + \text{terms in } B,\ C,$$

in which T is the sum of all the absolute quantities resulting from the substitution, and is a function of $[aa]$, $[ab]$,. $[an]$ Hence the value of x is

$$x = \frac{T}{R} + \frac{A}{R} + \text{terms in } B,\ C,$$

in which $\frac{T}{R}$ is the final value of x which results when $A = B = C \quad = 0$, and $\frac{1}{R}$ is necessarily the quantity denoted by Q in the preceding articles Therefore R is the weight of x, and hence we have a third method of finding the weights *Let the first normal equation* (the equation in x, Art 29) *be taken as the final equation for determining x, and substitute in it the values of y, z in*

terms of x as found from the remaining equations, then, before freeing the equation of fractions or introducing any reduction factor, the coefficient of x in this equation is the weight of the value of x In the same manner, substitute in the second normal equation (the equation in y) *the values of $x, z..$ in terms of y as found from the other equations, the coefficient of y is then the weight of the value of y, and so proceed for each unknown quantity*

According to this method we determine each unknown quantity, *together with its weight*, by a separate elimination carried through all the equations, in each case changing the order of elimination, until every unknown quantity has been made to come out the last The algorithm of this process, with GAUSS's convenient system of notation, will be given hereafter (Art 45)

37 *To find the mean error of observation* —The weight of x being found, we have the ratio of ε_x to ε, but we have yet to determine ε, which, in general, cannot be assigned *a priori*, but must be deduced *a posteriori*, that is, from the observations, and consequently from the equations of condition The residuals v', v'', v'''. . , in (43), are those which result when the most probable values of x, y, z. . (namely, those resulting from the normal equations) are substituted in the first members The actual or *true* errors (Art 17) of observation are, however, those values of the first members of (43) which result when the *true* values of x, y, z, . are substituted.

Let $x + \Delta x$, $y + \Delta y$, $z + \Delta z$, be the true values which, substituted in the equations of condition, give the true residuals u', u'', u''' ., so that we have

$$\left.\begin{array}{l} a'(x+\Delta x) + b'(y+\Delta y) + c'(z+\Delta z) + \quad n' = u' \\ a''(x+\Delta x) + b''(y+\Delta y) + c''(z+\Delta z) + \quad n'' = u'' \\ a'''(x+\Delta x) + b'''(y+\Delta y) + c'''(z+\Delta z) + \quad n''' = u''' \\ \qquad \&c \qquad\qquad\qquad\qquad \&c \end{array}\right\} \qquad (56)$$

If these equations be multiplied by a', a'', a'''. , respectively, the sum of the products is

$$\left.\begin{array}{l} [aa]\,x \;\; + [ab]\,y \;\; + [ac]\,z \;\; + \quad + [an] \\ + [aa]\,\Delta x + [ab]\,\Delta y + [ac]\,\Delta z + \end{array}\right\} = [au]$$

which by the first of (45) is reduced to

$$[aa]\,\Delta x + [ab]\,\Delta y + [ac]\,\Delta z + \quad - [au] = 0$$

In the same manner, multiplying each of the equations (56) by its b, c, &c., successively, we form the other equations of the following group

$$\left.\begin{array}{l}[aa]\,\Delta x + [ab]\,\Delta y + [ac]\,\Delta z + \quad - [au] = 0 \\ [ab]\,\Delta x + [bb]\,\Delta y + [bc]\,\Delta z + \quad - [bu] = 0 \\ [ac]\,\Delta x + [bc]\,\Delta y + [cc]\,\Delta z + \quad - [cu] = 0 \\ \qquad \&c \qquad\qquad\qquad \&c \end{array}\right\} \tag{57}$$

These being of the same form as the normal equations (45), we see that the value of Δx resulting from them will be of the same form as that of x resulting from (45), with only the substitution of $-u$ for n hence, by (51),

$$\Delta x - \alpha' u' - \alpha'' u'' - \alpha''' u''' - \quad = 0 \tag{58}$$

Again, multiplying (56) by v', v'', v''' . , respectively, the sum of the products is, by (44*), reduced to

$$[vn] = [vu]$$

and in the same manner, from (43),

$$[vn] = [vv]$$

whence

$$[vu] = [vv] = [vn] \tag{59}$$

The sum of the products obtained by multiplying the equations (43) respectively by u', u'', u''' is

$$[au]\,x + [bu]\,y + [cu]\,z + \quad + [nu] = [vu] = [vv]$$

and from (56), in the same manner,

$$\left.\begin{array}{l}[au]\,x \;\; + [bu]\,y \;\; + [cu]\,z \;\; + \quad + [nu] \\ + [au]\,\Delta x + [bu]\,\Delta y + [cu]\,\Delta z + \end{array}\right\} = [uu]$$

which two equations give

$$[uu] = [vv] + [au]\,\Delta x + [bu]\,\Delta y + [cu]\,\Delta z + \tag{60}$$

Now, $[uu]$ being the sum of the squares of the true errors of the observations, its value is, as in Art 17, $= m\varepsilon\varepsilon$, if we put

$m =$ the number of observations,
$\quad =$ the number of equations of condition

Consequently, if we could assume Δx, Δy . to vanish, we should have

$$\varepsilon\varepsilon = \frac{[vv]}{m}$$

and this will usually give a close approximation to the value of ε, but it will give the true value only in the exceedingly improbable case in which the values of x, y, z . are absolutely true, whereas they are to be regarded only as the most probable ones furnished by the observations. This formula, then, must always give too small a value of ε, since it ascribes too high a degree of precision to the observations We must, therefore, add to $[vv]$ the quantities $[au]\,\Delta x$, $[bu]\,\Delta y$, &c , as in (60), but, as we cannot assign any other than approximate values of these quantities, let us assume for them their mean values as found by the theory of mean errors. The mean value of $[au]\,\Delta x$ will be found by multiplying together

$$[au] = a'u' + a''u'' + a'''u''' +$$

and

$$\Delta x = \alpha'u' + \alpha''u'' + \alpha'''u''' +$$

observing that the errors u', u'', u''' ., when we consider only their mean values, are to be regarded as having the double sign $\pm$, so that the mean value of the product will contain only the terms $a'\alpha'u'u'$, $a''\alpha''u''u''$, &c. Hence we take

$$[au]\,\Delta x = a'\alpha'u'u' + a''\alpha''u''u'' + a'''\alpha'''u'''u''' +$$

and substituting in this the mean value of $u'u'$, $u''u''$, &c., which in each case is $\varepsilon\varepsilon$, we have

$$[au]\,\Delta x = (a'\alpha' + a''\alpha'' + a'''\alpha''' + \quad)\,\varepsilon\varepsilon$$

or, finally, by (53),

$$[au]\,\Delta x = \varepsilon\varepsilon$$

In the same manner, it must follow that $\varepsilon\varepsilon$ is the mean value of each of the terms $[bu]\,\Delta y$, $[cu]\,\Delta z$, &c If then we put

$\mu =$ the number of unknown quantities,

the equation (60) becomes

$$m\varepsilon\varepsilon = [vv] + \mu\varepsilon\varepsilon$$

whence

$$\varepsilon\varepsilon = \frac{[vv]}{m - \mu} \qquad \varepsilon = \sqrt{\frac{[vv]}{m - \mu}} \tag{61}$$

It is to be observed that when there is but one unknown quantity, or $\mu = 1$, this general form is reduced to the simple one (25), already given for direct observations

Finally, p_x, p_y, p_z . denoting the weights of x, y, z .. found by any of the preceding methods, we have

$$\varepsilon_x = \frac{\varepsilon}{\sqrt{p_x}} \qquad \varepsilon_y = \frac{\varepsilon}{\sqrt{p_y}}, \text{ \&c} \tag{62}$$

38 EXAMPLE —Let us suppose the following very simple equations of condition to be given :*

$$\begin{aligned} x - y + 2z - 3 &= 0 \\ 3x + 2y - 5z - 5 &= 0 \\ 4x + y + 4z - 21 &= 0 \\ - x + 3y + 3z - 14 &= 0 \end{aligned}$$

If but the first three of these equations had been given, the problem would have been determinate We should find from them $x = \frac{18}{7}, y = \frac{23}{7}, z = \frac{13}{7}$, and we should have to accept these values as final ones, with no means of judging of their accuracy, or of that of the observations upon which the equations are supposed to depend A fourth observation having given us our fourth equation, we find that the values of x, y, z derived from the first three will not satisfy it, for when they are substituted in it the first member becomes $-\frac{8}{7}$, instead of zero If we determine the values of x, y, and z from any three of the equations, and substitute these values in the fourth, we shall find a residual. Each one of the four systems of values of the unknown quantities thus found satisfies three equations exactly, and the fourth approximately, but, all the observations being subject to error, the most probable system of values can seldom satisfy any one of the equations exactly Hence the necessity of a principle of computation which shall lead as directly as possible to such a probable system of values, and this principle is furnished by the method of least squares

* GAUSS, *Theoria Motus*, Art 184

We are, then, by Art 29, to deduce from these four equations three normal equations, and the values of x, y, z which exactly satisfy these are to be regarded as the most probable values

To form the first normal equation, we multiply the first of the above equations of condition by 1 ($=a'$), the second by 3 ($=a''$), the third by 4 ($=a'''$), and the fourth by -1 ($=a^{\text{iv}}$), and add the products We thus find $[aa] = 27$, $[ab] = 6$, $[ac] = 0$, and $[an] = -88$

To form the second normal equation, we multiply the first equation of condition by -1 ($= b'$), the second by 2 ($= b''$), the third by 1 ($= b'''$), and the fourth by 3 ($= b^{\text{iv}}$), and add the products We thus find $[ab] = 6$, $[bb] = 15$, $[bc] = 1$, $[bn] = -70$

The third normal equation is formed by multiplying the first equation of condition by 2 ($= c'$), the second by -5 ($= c''$), the third by 4 ($= c'''$), and the fourth by 3 ($= c^{\text{iv}}$), and adding the products We find $[ac] = 0$, $[bc] = 1$, $[cc] = 54$, $[cn] = -107$

Hence our normal equations are

$$\begin{aligned} 27x + 6y \phantom{{}+z} - 88 &= 0 \\ 6x + 15y + z - 70 &= 0 \\ y + 54z - 107 &= 0 \end{aligned}$$

the solution of which gives, as the most probable values,

$$x = \frac{49154}{19899} = 2\,470$$

$$y = \frac{2617}{737} = 3\,551$$

$$z = \frac{12707}{6633} = 1\,916$$

In order to determine the mean, and hence also the probable errors of these values, let us first determine their weights according to the preceding methods

First By the method of Art 34, we first write $-1, 0, 0$, for the absolute terms of the three normal equations, and we have the three equations for determining the weight of x,

$$\begin{aligned} 27x' + 6y' - 1 &= 0 \\ 6x' + 15y' + z' &= 0 \\ y' + 54z' &= 0 \end{aligned}$$

in which accents are employed to distinguish the particular values from the above general ones. These give

$$x' = \frac{809}{19899}$$

which is the reciprocal of the required weight Hence,

$$p_x = \frac{19899}{809} = 24\,597$$

In a similar manner, to find the weight of y, we take the equations

$$\begin{aligned} 27x'' + 6y'' \qquad\qquad &= 0 \\ 6x'' + 15y'' + z'' - 1 &= 0 \\ y'' + 54z'' \qquad &= 0 \end{aligned}$$

and find

$$y'' = \frac{54}{737}$$

whence

$$p_y = \frac{737}{54} = 13\,648$$

And to find the weight of z, the equations

$$\begin{aligned} 27x''' + 6y''' \qquad\qquad &= 0 \\ 6x''' + 15y''' + z''' \qquad &= 0 \\ y''' + 54z''' - 1 &= 0 \end{aligned}$$

which give

$$z''' = \frac{41}{2211}$$

and

$$p_z = \frac{2211}{41} = 53\,927$$

Secondly By the method of Art. 35, we write our normal equations thus

$$\begin{aligned} 27x + 6y \qquad\qquad - 88 &= A \\ 6x + 15y + z - 70 &= B \\ y + 54z - 107 &= C \end{aligned}$$

and, carrying out the elimination as if A, B, and C were known quantities, we find

$$\begin{aligned} 19899\,x &= 49154 + (809)A - 324\,B + 6\,C \\ 737\,y &= 2617 - 12\,A + (54)\,B - C \\ 6633\,z &= 12707 + 2\,A - 9\,B + (123)\,C \end{aligned}$$

and, therefore,

$$x = \frac{49154}{19899} \text{ with the weight } p_x = \frac{19899}{809}$$

$$y = \frac{2617}{737} \quad \text{"} \quad \text{"} \quad \text{"} \quad p_y = \frac{737}{54}$$

$$z = \frac{12707}{6633} \quad \text{"} \quad \text{"} \quad \text{"} \quad p_z = \frac{6633}{123}$$

the same as by the first method

Thirdly By the method of Art 36, to find x and its weight we eliminate y and z from the equation in x (the first normal equation) by means of the other equations, employing successive substitutions The last normal equation gives

$$z = -\frac{1}{54}y + \frac{107}{54}$$

which being substituted in the second gives

$$6x + \frac{809}{54}y - \frac{3673}{54} = 0$$

The value of y from this, namely,

$$y = -\frac{324}{809}x + \frac{3673}{809}$$

being substituted in the first normal equation, and no reduction being made, gives

$$\frac{19899}{809}x - \frac{49154}{809} = 0$$

where the coefficient of x is the weight, and the value of x is the same as before found

To find y and its weight, we make the second the final equation. From the first and third we find

$$x = -\frac{6}{27}y + \frac{88}{27}$$

$$z = -\frac{1}{54}y + \frac{107}{54}$$

which substituted in the second give

$$\frac{737}{54}y - \frac{2617}{54} = 0$$

where the coefficient of y is its weight.

Finally, to find z with its weight, we make the third normal equation the final one From the first two we find

$$y = -\frac{9}{123}z + \frac{454}{123}$$

which substituted in the third gives

$$\frac{6633}{123}z - \frac{12707}{123} = 0$$

where the coefficient of z is its weight, and its value is the same as was before found

By a little attention, it will be perceived that the three methods involve essentially the same numerical operations

We are next to find the mean errors of x, y, and z, for which purpose we must first find the mean error of an observation, assuming here, for the sake of illustration, that the absolute terms of the given equations of condition are the observed quantities, and that they are subject to the same mean error Substituting in these equations the above found values of x, y, and z, we obtain the residuals as follows

No	v	vv
1	— 0 249	0 0620
2	— 0 068	0046
3	+ 0 095	0090
4	— 0 069	0048

$$m = 4, \mu = 3, \quad [vv] = 0\ 0804$$

$$\frac{[vv]}{m - \mu} = 0\ 0804$$

Hence, by (61),

$$\varepsilon = \sqrt{0\ 0804} = 0\ 284$$

which is the mean error of an observation, so far as this error can be inferred from so small a number of observations (See the next article) Consequently, the mean errors of x, y, and z are as follows

$$\varepsilon_x = \frac{\varepsilon}{\sqrt{p_x}} = 0\ 057$$

$$\varepsilon_y = \frac{\varepsilon}{\sqrt{p_y}} = 0\ 077$$

$$\varepsilon_z = \frac{\varepsilon}{\sqrt{p_z}} = 0\ 039$$

Multiplying these errors by the constant 0 6745, we shall have (Art 15) the probable errors as follows.

Probable error of an observation			$= 0\ 192$
"	"	x	$= 0\ 038$
"	"	y	$= 0\ 052$
"	"	z	$= 0\ 026$

39. It has already been remarked in the foregoing pages, and the remark is especially important in the present connection, that the method of least squares supposes in general a great number of observations to have been taken, or a number sufficiently great to determine approximately the errors to which the observations are liable. Theoretically, the greater the number of observations the more nearly will the series of residuals express the series of actual errors, and, consequently, the more correct will be the value of ε inferred from these residuals In practice, therefore, no dependence should be placed upon the mean or probable errors deduced from so small a number of observations as we have employed, for the sake of brevity and clearness, in the preceding example Nevertheless, the method is, even in this case, the best adapted for determining the most probable values of the unknown quantities deducible from the given observations, and also their relative degree of precision Thus, in this example, the degrees of precision (denoted by h, Art 10) of x, y, and z, being inversely proportional to the mean errors, or directly proportional to the square roots of the weights, are nearly as the numbers 5, 3 7, and 7 3, so that from the four given observations z is about twice as accurately found as y, while the precision of x falls between that of y and z But we can place but little dependence upon the result which assigns 0 284 as the mean error of observation, and 0 057, 0 077, 0 039 as the mean errors of x, y, and z, because this result is derived from too small a number of observations

EQUATIONS OF CONDITION FROM NON-LINEAR FUNCTIONS.

40 Let the relation between the observed quantities V', V'', V''' . . and the unknown quantities X, Y, Z. . . . be, for the observations severally,

$$\left.\begin{array}{l} f'\ (V',\ X, Y\ Z,\qquad) = 0 \\ f''\ (V'',\ X, Y, Z,\qquad) = 0 \\ f'''(V''', X, Y, Z,\qquad) = 0 \\ \qquad\qquad \&c \end{array}\right\} \qquad (63)$$

Let the values of V', V'', V''' , found by observation, be M', M'', M''' These values being substituted, we shall have the equations

$$\left.\begin{array}{l} f'\ (M', \ X, Y, Z, \quad) = 0 \\ f''\ (M'', \ X, Y, Z, \quad) = 0 \\ f'''\ (M''', X, Y, Z, \quad) = 0 \\ \quad \&c \end{array}\right\} \qquad (64)$$

from which the values of X, Y, Z are to be found But, as we cannot effect the direct solution of these equations according to the method of least squares so long as they are not linear, we resort to the following indirect process, by which linear equations of condition are formed Let *approximate* values of X, Y, Z be found, either by some independent method or from a sufficient number of the equations (64) treated by any suitable process, and denote these approximate values by X_0, Y_0, Z_0. Let the most probable values be

$$X = X_0 + x, \qquad Y = Y_0 + y, \qquad Z = Z_0 + z,$$

then x, y, z are the corrections required to reduce our approximate values to the most probable values, in other words, x, y, z are the most probable corrections of the approximate values, and the method of least squares is now to be applied in finding these corrections

Substitute the approximate values X_0, Y_0, Z_0 in (63), and find, by resolving the equations, the corresponding values of V', V'' which denote by V_0', V_0'' These will be functions which may be thus generally expressed

$$\begin{array}{l} V_0' = F'\ (X_0, Y_0, Z_0 \quad) \\ V_0'' = F''\ (X_0, Y_0, Z_0 \quad) \\ \quad \&c \end{array}$$

Now, the values of V', V'' which result when the most probable values $X_0 + x$, $Y_0 + y$, $Z_0 + z$ are substituted, and which are yet unknown, being denoted by N', N'' we have

$$\begin{array}{l} N' = F'\ (X_0 + x, \ Y_0 + y, Z_0 + z \\ N'' = F''\ (X_0 + x, \ Y_0 + y, Z_0 + z, \quad) \\ \quad \&c \end{array}$$

and by TAYLOR's Theorem, when we neglect the higher powers

of x, y, z. which are supposed to be very small quantities, we have

$$N' = V_0' + \frac{dV_0'}{dX_0}x + \frac{dV_0'}{dY_0}y + \frac{dV_0'}{dZ_0}z +$$
$$N'' = V_0'' + \frac{dV_0''}{dX_0}x + \frac{dV_0''}{dY_0}y + \frac{dV_0''}{dZ_0}z +$$
&c &c

where $\frac{dV_0'}{dX_0}, \frac{dV_0''}{dX_0}$, &c, $\frac{dV_0'}{dY_0}, \frac{dV_0''}{dY_0}$, &c are simply the values of the derivatives of V', V'' found by differentiating (63) with reference to each of the variables, and afterwards substituting X_0, Y_0, &c for X, Y, . &c

If now we denote the derivatives of V', V'' . with reference to X by a', a'' .., their derivatives with reference to Y by b', b'' . . &c · so that

$$N' = V_0' + a'x + b'y + c'z +$$
$$N'' = V_0'' + a''x + b''y + c''z + \quad ..$$
&c &c

and then also put

$$v' = N' - M', \qquad v'' = N'' - M'', \text{ \&c}$$
$$n' = V_0' - M', \qquad n'' = V_0'' - M'', \text{ \&c}$$

our equations become

$$a'x + b'y + c'z + \quad + n' = v'$$
$$a''x + b''y + c''z + \quad + n'' = v''$$
$$a'''x + b'''y + c'''z + \quad + n''' = v'''$$
&c &c

in which a', b' . a'', b'' .. n', n'' .. are all known quantities; and v', v'' .. are the residual errors of observation. These equations of condition are precisely like those already treated, and, being solved by the same method, give the most probable values of x, y, z. , and hence, also, the most probable values of X, Y, Z .

This process rests upon the assumption that the approximate values X_0, Y_0, Z_0 .. are already so nearly correct that the squares of x, y, z . may be neglected But should the values found for x, y, z. show that this assumption was not admissible, the computation is to be repeated, starting with the last found values $X_0 + x$, $Y_0 + y$, $Z_0 + z$. . as the approximate values, and then

the corrections which these last require will generally be so small that their higher powers may be neglected without sensible error However, should this still not be the case, successive approximations, commencing always with the last found values, will at length lead to values which require only corrections suitably small

Even when the given function is already linear, it is mostly expedient to follow the general method just given · namely, to substitute approximate values and form equations of condition to determine their corrections This reduces x, y, z to small quantities, greatly simplifies the computations, and diminishes the chance of error

TREATMENT OF EQUATIONS OF CONDITION WHEN THE OBSERVATIONS HAVE DIFFERENT WEIGHTS.

41 The process above explained assumes that all the observations are subject to the same mean error, and hence are all of the same weight The more general case, in which the observations are of different weights, is easily reduced to this simple case For, let

$$a'x + b'y + c'z + \quad + n' = v'$$

be an equation of condition of the weight p'; that is, one formed for an observation of the weight p'. The mean error of an observation of the weight unity being ε_1, the mean error of the actual observation, and, therefore, also of n', is $\varepsilon' = \frac{\varepsilon_1}{\sqrt{p'}}$ Hence the mean error of $n'\sqrt{p'}$ is, by Art 20, equal to $\varepsilon'\sqrt{p'}$, that is, equal to ε_1 If, therefore, we multiply the equation by $\sqrt{p'}$, so that we have

$$a'\sqrt{p'}\ x + b'\sqrt{p'}\ y + c'\sqrt{p'}\ z + \quad + n'\sqrt{p'} = v'\sqrt{p'}$$

it becomes an equation in which the mean error of the absolute term is the mean error of an observation of the weight unity Hence we have only to multiply each equation of condition by the square root of its weight in order to reduce them all to the same unit of weight, after which the normal equations will be found as in other cases

The mean error of observation, found by (61) from the equations of condition thus transformed, will be that of an observa-

tion of the weight unity, and the weights of the unknown quantities will come out with reference to the same unit

ELIMINATION OF THE UNKNOWN QUANTITIES FROM THE NORMAL EQUATIONS BY THE METHOD OF SUBSTITUTION, ACCORDING TO GAUSS

42. By means of a peculiar notation proposed by GAUSS, the elimination by substitution is carried on so as to preserve throughout the symmetry which exists in the normal equations. In order to explain this method, it will be expedient to suppose a limited number of unknown quantities I shall take but *four*, but shall give the process in so general a form that it may readily be extended to any number

The unknown quantities will be denoted by

$$x, y, z, w,$$

and their coefficients in the equations of condition by

$$a, b, c, d,$$

respectively, with sub-numerals denoting the number of the equation or observation upon which it depends, and by

$$n_1, n_2, n_3, \&c$$

the absolute terms of the 1st, 2d, 3d, &c. equations respectively. so that the m equations of condition (here supposed to be reduced to the same weight by Art 41) will be

$$\left.\begin{array}{l} a_1x + b_1y + c_1z + d_1w + n_1 = 0 \\ a_2x + b_2y + c_2z + d_2w + n_2 = 0 \\ a_3x + b_3y + c_3z + d_3w + n_3 = 0 \\ \\ a_mx + b_my + c_mz + d_mw + n_m = 0 \end{array}\right\} \quad (65)$$

and the four normal equations formed from these are

$$\left.\begin{array}{l} [aa]\,x + [ab]\,y + [ac]\,z + [ad]\,w + [an] = 0 \\ [ab]\,x + [bb]\,y + [bc]\,z + [bd]\,w + [bn] = 0 \\ [ac]\,x + [bc]\,y + [cc]\,z + [cd]\,w + [cn] = 0 \\ [ad]\,x + [bd]\,y + [cd]\,z + [dd]\,w + [dn] = 0 \end{array}\right\} \quad (66)$$

The value of x from the first equation is

$$x = -\frac{[ab]}{[aa]}y - \frac{[ac]}{[aa]}z - \frac{[ad]}{[aa]}w - \frac{[an]}{[aa]}$$

If this is substituted in the other three equations, we shall preserve the symmetry of the result by the following notation.

$$[bb] - \frac{[ab]}{[aa]}[ab] = [bb\ 1] \qquad [dd] - \frac{[ad]}{[aa]}[ad] = [dd\ 1]$$

$$[bc] - \frac{[ab]}{[aa]}[ac] = [bc\ 1] \qquad [bn] - \frac{[ab]}{[aa]}[an] = [bn\ 1]$$

$$[bd] - \frac{[ab]}{[aa]}[ad] = [bd\ 1] \qquad [cn] - \frac{[ac]}{[aa]}[an] = [cn\ 1]$$

$$[cc] - \frac{[ac]}{[aa]}[ac] = [cc\ 1] \qquad [dn] - \frac{[ad]}{[aa]}[an] = [dn.1]$$

$$[cd] - \frac{[ac]}{[aa]}[ad] = [cd\ 1]$$

The three equations thus become

$$\left.\begin{aligned} [bb\ 1]y + [bc\ 1]z + [bd\ 1]w + [bn\ 1] &= 0 \\ [bc\ 1]y + [cc\ 1]z + [cd\ 1]w + [cn\ 1] &= 0 \\ [bd\ 1]y + [cd\ 1]z + [dd\ 1]w + [dn\ 1] &= 0 \end{aligned}\right\} \quad (67)$$

The presence of the numeral 1 is all that distinguishes these from original normal equations in y, z, and w The elimination of y will, therefore, be effected in the same manner as that of x Thus, from the first, we have

$$y = -\frac{[bc\ 1]}{[bb\ 1]}z - \frac{[bd\ 1]}{[bb\ 1]}w - \frac{[bn\ 1]}{[bb\ 1]}$$

the substitution of which in the other two equations leads to the following notation·

$$[cc\ 1] - \frac{[bc\ 1]}{[bb\ 1]}[bc\ 1] = [cc\ 2] \qquad [cn\ 1] - \frac{[bc\ 1]}{[bb\ 1]}[bn\ 1] = [cn\ 2]$$

$$[cd\ 1] - \frac{[bc\ 1]}{[bb\ 1]}[bd\ 1] = [cd\ 2] \qquad [dn\ 1] - \frac{[bd\ 1]}{[bb\ 1]}[bn\ 1] = [dn\ 2]$$

$$[dd\ 1] - \frac{[bd\ 1]}{[bb\ 1]}[bd\ 1] = [dd\ 2]$$

and the resulting equations are

$$\left.\begin{array}{l}[cc\ 2]\,z + [cd\ 2]\,w + [cn\ 2] = 0 \\ [cd\ 2]\,z + [dd\ 2]\,w + [dn\ 2] = 0\end{array}\right\} \qquad (68)$$

From the first of these we have

$$z = -\frac{[cd\ 2]}{[cc\ 2]}\,w - \frac{[cn\ 2]}{[cc\ 2]}$$

which, substituted in the second, leads to the following notation:

$$[dd\ 2] - \frac{[cd\ 2]}{[cc\ 2]}[cd\ 2] = [dd\ 3] \quad \Bigg| \quad [dn\ 2] - \frac{[cd\ 2]}{[cc\ 2]}[cn\ 2] = [dn\ 3]$$

and the resulting equation is

$$[dd\ 3]\,w + [dn\ 3] = 0 \qquad (69)$$

whence

$$w = -\frac{[dn\ 3]}{[dd\ 3]}$$

Having thus found w, we substitute its value in the first of (68), and deduce z Then the values of z and w being substituted in the first of (67), we deduce y, and finally, substituting the values y, z, and w in the first of (66), we deduce x. These latter substitutions are made in the numerical computation, but it is not necessary to write out here the formulæ which result from the literal substitutions, as it would not facilitate the computation

It may be observed that all the auxiliaries $[bb\ 1]$, $[bc\ 1]$, $[cc.2]$, &c., may be expressed by the general formula

$$[\beta\gamma\ \mu] - \frac{[\alpha\beta\ \mu]}{[\alpha\alpha\ \mu]}[\alpha\gamma\ \mu] = [\beta\gamma\ (\mu+1)]$$

α, β, γ denoting any three letters, and μ any numeral

For the convenience of reference, the final equations employed in the actual computation are brought together as follows, the coefficient of that unknown quantity which is found from each after the substitution of the values of the others being reduced to unity.

$$\left.\begin{array}{l}
x + \frac{[ab]}{[aa]} y + \frac{[ac]}{[aa]} z + \frac{[ad]}{[aa]} w + \frac{[an]}{[aa]} = 0 \\
\qquad y + \frac{[bc\ 1]}{[bb\ 1]} z + \frac{[bd\ 1]}{[bb\ 1]} w + \frac{[bn\ 1]}{[bb\ 1]} = 0 \\
\qquad\qquad z + \frac{[cd\ 2]}{[cc\ 2]} w + \frac{[cn\ 2]}{[cc\ 2]} = 0 \\
\qquad\qquad\qquad w + \frac{[dn\ 3]}{[dd\ 3]} = 0
\end{array}\right\} \quad (70)$$

As the number of unknown quantities increases, the number of auxiliaries to be found increases very rapidly If we include the coefficients and absolute terms of the normal equations, the whole number of auxiliaries is shown in the following scheme *

No of unknown quantities	1	2	3	4	5	6	7	8
No of auxiliaries	2	7	16	30	50	77	112	156

43 For the purpose of verification, it is expedient to repeat the elimination in inverse order, commencing with the last normal equation and ending with the first, which will bring out x It will not be necessary to write out the formulæ for this inverse elimination, since when the form for computation has been once prepared, it suffices to place in it the coefficients of the normal equations in inverse order, and then to proceed with the numerical operations precisely as in the first elimination The unknown quantities coming out in the first elimination in the order w, z, y, x, they will in the second come out in the order x, y, z, w

This inversion has also the advantage of giving the weights of all the unknown quantities with the greatest facility, as will hereafter be shown

44 A very complete final verification, or "control," is obtained as follows Substitute the values of x, y, z, w in the equations of condition, and thus find the residuals $v_1, v_2, v_3 \quad v_m$, or the values which the first members assume Form the sum

$$[vv] = v_1v_1 + v_2v_2 + v_3v_3 + \qquad + v_mv_m$$

* The number of auxiliaries will be, in general,

$$\frac{\iota(\iota + 1)(\iota + 5)}{2\ 3}$$

where ι denotes the number of unknown quantities

which is also required in finding the mean error of observation by (61). Also form the following new auxiliaries

$$[nn] \quad n_1 n_1 + n_2 n_2 + n_3 n_3 + \qquad + n_m n_m$$

$$[nn] - \frac{[an]^2}{[aa]} = [nn\ 1] \qquad\qquad [nn\ 2] - \frac{[cn\ 2]^2}{[cc\ 2]} = [nn\ 3]$$

$$[nn\ 1] - \frac{[bn\ 1]^2}{[bb\ 1]} = [nn\ 2] \qquad\qquad [nn\ 3] - \frac{[dn\ 3]^2}{[dd\ 3]} = [nn\ 4]$$

then, if the whole computation, both of the normal equations themselves and of the subsequent elimination, is correct, we must have

$$[vv] = [nn\ 4] \tag{71}$$

To demonstrate this, we observe first that we have already, by (59),

$$[vv] = [vn]$$

If now we go back to the equations of condition, and multiply each by its n, the sum of the products is

$$[an]\,x + [bn]\,y + [cn]\,z + [dn]\,w + [nn] = [vn] = [vv]$$

If this equation be annexed as a fifth normal equation to the group (66), and the successive substitutions are made in it as in the others, beginning with x, it evidently becomes, successively,

$$\begin{aligned} [bn\ 1]\,y + [cn\ 1]\,z + [dn\ 1]\,w + [nn\ 1] &= [vv] \\ [cn\ 2]\,z + [dn\ 2]\,w + [nn\ 2] &= [vv] \\ [dn\ 3]\,w + [nn\ 3] &= [vv] \\ [nn\ 4] &= [vv] \end{aligned}$$

which last is the same as (71).

DETERMINATION OF THE WEIGHTS OF THE UNKNOWN QUANTITIES WHEN THE ELIMINATION HAS BEEN EFFECTED BY THE METHOD OF SUBSTITUTION.

45 By the general method explained in Art. 36, the elimination would have to be performed as many times as there are unknown quantities. It is desirable to have more direct methods When there are but four unknown quantities, we can find their weights from the auxiliaries occurring in two successive eliminations in inverse order In the first elimination, according to the order a, b, c, d, we find w by substitution in the last normal

equation, and, the coefficient of w being then $[dd\ 3]$, it follows, by Art. 36, that the weight of the value of w is

$$p_w = [dd\ 3]$$

In the inverse elimination, in the order d, c, b, a, the coefficient of x in the final equation, which would be denoted by $[aa\ 3]$, will be the weight of x, or

$$p_x = [aa\ 3]$$

Now, if a third elimination were carried out in the order x, y, w, z, or a, b, d, c (the third normal equation now taking the last place), we should have the same auxiliaries as in the first elimination, so far as those denoted by the numerals 1 and 2, and the equations (68) would still be the same, but in the following order.

$$\begin{aligned}
[dd\ 2]\,w + [cd\ 2]\,z + [dn\ 2] &= 0 \\
[cd\ 2]\,w + [cc\ 2]\,z + [cn\ 2] &= 0
\end{aligned}$$

The value of w given by the first of these is

$$w = -\frac{[cd\ 2]}{[dd\ 2]}\,z - \frac{[dn\ 2]}{[dd\ 2]}$$

which, substituted in the second, gives for the coefficient of z,

$$[cc\ 3] = [cc\ 2] - \frac{[cd\ 2]}{[dd\ 2]}\,[cd\ 2] = [dd\ 3] \times \frac{[cc\ 2]}{[dd\ 2]}$$

Therefore we have

$$p_z = [cc\ 2]\,\frac{[dd\ 3]}{[dd\ 2]}$$

In the fourth supposed elimination, in the order d, c, a, b, the auxiliaries denoted by 1 and 2 would be the same as in our actually performed second elimination, but in the final equation in y we should have for the coefficient of y the quantity

$$[bb\ 3] = [bb\ 2] - \frac{[ab\ 2]}{[aa\ 2]}\,[ab\ 2] = [aa\ 3] \times \frac{[bb\ 2]}{[aa\ 2]}$$

and, therefore,

$$p_y = [bb\ 2]\,\frac{[aa\ 3]}{[aa\ 2]}$$

Thus, when the elimination has been once inverted, we have

found the weights of two of the unknown quantities directly, and the weights of the other two in terms of the auxiliaries previously used, and in a form adapted for logarithmic computation.

46 In order to give the above method greater generality, so that the reader may be enabled to extend it to a greater number of unknown quantities, we remark that the product of the form

$$P = [aa]\,[bb\ \ 1]\,[cc\ \ 2]\,[dd\ \ 3]$$

has the same value whatever order may be followed in the elimination This is the same as saying that it is a symmetrical function of a, b, c, d which is, consequently, not affected in value by the permutation of these letters * Suppose, then, four orders of elimination, in which each unknown quantity in turn becomes the last, while the order of the remaining three quantities remains the same, and, to distinguish the auxiliaries which occur in each elimination, let the letter which occurs in the last auxiliary be annexed to each of the others; the above constant product may thus be expressed in the following four forms:

$$\begin{aligned} P &= [aa]_d\,[bb\ \ 1]_d\,[cc\ \ 2]_d\,[dd\ \ 3] \\ &= [aa]_c\,[bb\ \ 1]_c\,[dd\ \ 2]_c\,[cc\ \ 3] \\ &= [aa]_b\,[cc\ \ 1]_b\,[dd\ \ 2]_b\,[bb\ \ 3] \\ &= [bb]_a\,[cc\ \ 1]_a\,[dd\ \ 2]_a\,[aa\ \ 3] \end{aligned}$$

Now, it is evident that each time a new unknown quantity is made the last, we do not change *all* the auxiliaries, but only those which involve the letter which has become the last in the new order It is readily seen, therefore, that if we annex a letter to those auxiliaries only which have a different value from that which is denoted by the same symbol in the first elimination, we shall have, simply,

$$\begin{aligned} P &= [aa]\,[bb\ \ 1]\ \ [cc\ \ 2]\ \ [dd\ \ 3] \\ &= [aa]\,[bb\ \ 1]\ \ [dd\ \ 2]\ \ [cc\ \ 3] \\ &= [aa]\,[cc\ \ 1]\ \ [dd\ \ 2]_b\,[bb\ \ 3] \\ &= [bb]\,[cc\ \ 1]_a\,[dd\ \ 2]_a\,[aa\ \ 3] \end{aligned}$$

* The quantity P is, in fact, nothing more than the common denominator of the values of x, y, z, w, when these values are reduced to functions of the known quantities and in the form of simple fractions; and this common denominator must evidently have the same value whatever order of elimination is followed

from which we deduce

$$\left.\begin{aligned}
p_w &= [dd\ 3] \\
p_z &= [cc\ 3] = [cc\ 2]\ \frac{[dd\ 3]}{[dd\ 2]} \\
p_y &= [bb\ 3] = [bb\ 1]\ \frac{[cc\ 2]}{[cc\ 1]}\ \frac{[dd\ 3]}{[dd\ 2]_b} \\
p_x &= [aa\ 3] = [aa]\ \frac{[bb\ 1]}{[bb]}\ \frac{[cc\ 2]}{[cc\ 1]_a}\ \frac{[dd\ 3]}{[dd\ 2]_a}
\end{aligned}\right\} \tag{72}$$

If this method is applied in the case of six unknown quantities, we shall in each of two eliminations have the weights of three of the unknown quantities by computing each time but one new auxiliary, and, therefore, the weights of all six when the second elimination is the inverse of the first In the case of but four unknown quantities, by inverting the elimination we can find the weights of z and y twice, and thus verify our work

47 If we have but three unknown quantities, the weights are determined at the same time with x, y, and z themselves, by a single elimination in the order a, b, c, in which z comes out first with the weight

$$p_z = [cc\ 2]$$

and then y and z, with the weights

$$p_y = [bb\ 2] = [bb\ 1]\ \frac{[cc\ 2]}{[cc\ 1]}$$

$$p_x = [aa\ 2] = [aa]\ \frac{[bb\ 1]}{[bb]}\ \frac{[cc\ 2]}{[cc\ 1]_a}$$

in which

$$[cc\ 1]_a = [cc] - \frac{[bc]}{[bb]}[bc]$$

INDEPENDENT DETERMINATION OF EACH UNKNOWN QUANTITY AND ITS WEIGHT, ACCORDING TO GAUSS

48 Let the four equations (70) be multiplied respectively by 1, A', A'', A''', and let these factors be determined by the condition that in the sum of the products the coefficients of y, z, and w shall be zero Also, let the last three equations of (70) be multiplied respectively by 1, B'', B''', and let these factors

be determined by the condition that in the sum of the products the coefficients of z and w shall be zero Finally, let the last two equations of (70) be multiplied respectively by 1, C''', and let C''' be determined by the condition that in the sum of the products the coefficient of w shall be zero The conditions which determine these factors are then

$$\left.\begin{aligned}
0 &= \frac{[ab]}{[aa]} + A' \\
0 &= \frac{[ac]}{[aa]} + \frac{[bc\ 1]}{[bb\ 1]}A' + A'' \\
0 &= \frac{[ad]}{[aa]} + \frac{[bd\ 1]}{[bb\ 1]}A' + \frac{[cd\ 2]}{[cc\ 2]}A'' + A''' \\
0 &= \frac{[bc\ 1]}{[bb\ 1]} + B'' \\
0 &= \frac{[bd\ 1]}{[bb\ 1]} + \frac{[cd\ 2]}{[cc\ 2]}B'' + B''' \\
0 &= \frac{[cd\ 2]}{[cc\ 2]} + C'''
\end{aligned}\right\} \qquad (73)$$

and the final values of x, y, z, w, in terms of these factors, are given as follows.

$$\left.\begin{aligned}
-x &= \frac{[an]}{[aa]} + \frac{[bn\ 1]}{[bb\ 1]}A' + \frac{[cn\ 2]}{[cc\ 2]}A'' + \frac{[dn\ 3]}{[dd\ 3]}A''' \\
-y &= \frac{[bn\ 1]}{[bb\ 1]} + \frac{[cn\ 2]}{[cc\ 2]}B'' + \frac{[dn\ 3]}{[dd\ 3]}B''' \\
-z &= \frac{[cn\ 2]}{[cc\ 2]} + \frac{[dn\ 3]}{[dd\ 3]}C''' \\
-w &= \frac{[dn\ 3]}{[dd\ 3]}
\end{aligned}\right\} \qquad (74)$$

49 As the equations (73) are above arranged, all the factors A are determined from the first system of three equations, the factors B from the second system of two equations, &c , in each case, by successive substitution This method then enables us to find each unknown quantity independently of the others

Another form may be given to the computation of the auxiliary factors Since in the formation of the equations (74) we have regarded $[an]$, $[bn]$, $[cn]$, &c. as independent, we must still so

regard them when we invert the process and recompose the equations (70) from (74) If, then, we multiply the equations (74) respectively by 1, $\frac{[ab]}{[aa]}$, $\frac{[ac]}{[aa]}$, $\frac{[ad]}{[aa]}$, and add the products in order to recompose the first of (70), the coefficient of $[an]$ will be $\frac{1}{[aa]}$; but the coefficients of $[bn\ 1]$, $[cn\ 2]$, &c must severally be equal to zero The same principle will apply when we recompose the second equation of (70) from the last three of (74), &c Hence we have

$$\left.\begin{aligned}
0 &= A' + \frac{[ab]}{[aa]} \\
0 &= A'' + \frac{[ab]}{[aa]} B'' + \frac{[ac]}{[aa]} \\
0 &= A''' + \frac{[ab]}{[aa]} B''' + \frac{[ac]}{[aa]} C''' + \frac{[ad]}{[aa]} \\
0 &= B'' + \frac{[bc\ 1]}{[bb\ 1]} \\
0 &= B''' + \frac{[bc\ 1]}{[bb\ 1]} C''' + \frac{[bd\ 1]}{[bb\ 1]} \\
0 &= C''' + \frac{[cd\ 2]}{[cc\ 2]}
\end{aligned}\right\} \quad (75)$$

According to this scheme, we first find A', B'', C''' from the equations in which they occur singly, then, with these factors, we find the values of A'', B''', from the equations involving two factors, &c.

50 Again, let us write the 3d, 5th, and 6th equations of (75) in the following order

$$\begin{aligned}
A''' + \frac{[ab]}{[aa]} B''' + \frac{[ac]}{[aa]} C''' + \frac{[ad]}{[aa]} &= 0 \\
B''' + \frac{[bc\ 1]}{[bb\ 1]} C''' + \frac{[bd\ 1]}{[bb\ 1]} &= 0 \\
C''' + \frac{[cd\ 2]}{[cc\ 2]} &= 0
\end{aligned}$$

Comparing these with the first three of (70), we at once infer that A''', B''', C''' are those values of x, y, z, respectively, which we should obtain from our first three normal equations by putting

$w = 1$ and omitting the terms in n, or, going back to (66), that A''', B''', C''' may be determined by the following conditions:

$$[aa]\,A''' + [ab]\,B''' + [ac]\,C''' + [ad] = 0$$
$$[ab]\,A''' + [bb]\,B''' + [bc]\,C''' + [bd] = 0$$
$$[ac]\,A''' + [bc]\,B''' + [cc]\,C''' + [cd] = 0$$

If now we multiply the normal equations (66) by A''', B''', C''', and 1, respectively, and add the products, the conditions just given will cause x, y, and z to disappear, and the resulting equation in w must be identical* with (69) so that A''', B''', C''' must also satisfy the following condition:

$$[an]\,A''' + [bn]\,B''' + [cn]\,C''' + [dn] = [dn\ \ 3] \qquad (76)$$

The second and fourth equations of (75) being written as follows,

$$A'' + \frac{[ab]}{[aa]}B'' + \frac{[ac]}{[aa]} = 0$$
$$B'' + \frac{[bc\ \ 1]}{[bb\ \ 1]} = 0$$

and compared with the first two of (70), we infer that A'', B'' are those values of x and y which we obtain from the first two normal equations by putting $z = 1$, $w = 0$, and omitting the terms in n; that is, A'' and B'' must satisfy the conditions

$$[aa]\,A'' + [ab]\,B'' + [ac] = 0$$
$$[ab]\,A'' + [bb]\,B'' + [bc] = 0$$

Therefore, if we multiply the first three normal equations (66) by A'', B'', 1, respectively, and add the products, x and y will disappear, and, the resulting equation being identical with the first of (68), we must also have

$$[an]\,A'' + [bn]\,B'' + [cn] = [cn\ \ 2] \qquad (77)$$

Lastly, it is evident that A' must also satisfy the condition

$$[an]\,A' + [bn] = [bn\ \ 1] \qquad (78)$$

From these relations we readily infer general formulæ for the weights of the unknown quantities

* The equation (69) is the last normal equation, unchanged except by the substitution of *equivalents* for x, y, and z, and in the present article we eliminate x, y, and z by the use of factors, but do not change the last normal equation, since we multiply it by unity

According to Art. 34, the reciprocal of the weight of x is that value which we obtain for x if we put $[an] = -1$ and $[bn] = [cn] = [dn] = 0$ But, under these conditions, the equations (76), (77), (78) give

$$[dn\ 3] = -A''', \qquad [cn\ 2] = -A'', \qquad [bn\ 1] = -A'$$

In order, therefore, that the value of x given by the first equation of (74) may become $\frac{1}{p_x}$, we have only to substitute $-A'''$, $-A''$, $-A'$, -1, respectively, for $[dn\ 3]$, $[cn\ 2]$, $[bn\ 1]$, $[an]$

In the same manner, the weight of y being found by putting $[bn] = -1$ and $[an] = [cn] = [dn] = 0$, we have to put

$$[dn\ 3] = -B''', \qquad [cn\ 2] = -B'', \qquad [bn\ 1] = -1$$

in the second equation of (74), in order that we may put $\frac{1}{p_y}$ for y

For the weight of z we have to put

$$[dn\ 3] = -C''', \qquad [cn\ 2] = -1$$

in the third equation of (74), and $\frac{1}{p_z}$ for z

For the weight of w, we have to put

$$[dn\ 3] = -1$$

in the last equation of (74), and change w to $\frac{1}{p_w}$

The final formulæ for the weights are, therefore,

$$\left.\begin{aligned}
\frac{1}{p_x} &= \frac{1}{[aa]} + \frac{A'A'}{[bb\ 1]} + \frac{A''A''}{[cc\ 2]} + \frac{A'''A'''}{[dd\ 3]} \\
\frac{1}{p_y} &= \frac{1}{[bb\ 1]} + \frac{B''B''}{[cc\ 2]} + \frac{B'''B'''}{[dd\ 3]} \\
\frac{1}{p_z} &= \frac{1}{[cc\ 2]} + \frac{C'''C'''}{[dd\ 3]} \\
\frac{1}{p_w} &= \frac{1}{[dd\ 3]}
\end{aligned}\right\} \tag{79}$$

MEAN ERROR OF A LINEAR FUNCTION OF THE QUANTITIES x, y, z, w

50 *To find the mean error of the function*

$$X = fx + gy + hz + iw + l \tag{80}$$

when x, y, z, w are dependent upon the same observations

The quantities x, y, z, w not being directly observed, their mean errors cannot be treated as independent, as was done in the case of directly observed quantities in Art 22 We might proceed by the method of Art 23, but, as we here suppose x, y, z, w to have been determined from the normal equations (66), we can obtain a more convenient method by the aid of the auxiliaries which have been introduced in the general elimination The quantities x, y, z, w being functions of the directly observed quantities n', n'', n''', the mean error of X can be readily obtained by the principles of Art. 22, if we first reduce X to a function of these observed quantities For this purpose, if the values of x, y, z, w deduced from (70) be substituted in X, we shall have an expression of the form

$$X = k_0\,[an] + k_1\,[bn\ 1] + k_2\,[cn\ 2] + k_3\,[dn\ 3] + l \qquad (81)$$

in which the coefficients k_0, k_1, k_2, k_3 are functions of $[aa]$, $[ab]$, &c In order to determine these coefficients, let us substitute in this expression the values of $[an]$, $[bn.1]$, &c given by (70). We find

$$\begin{aligned} X = -[aa]\,k_0x - {} & [ab]\,k_0y - [ac]\,k_0z - [ad]\,k_0w + l \\ & - [bb\ 1]\,k_1y - [bc\ 1]\,k_1z - [bd\ 1]\,k_1w \\ & \qquad - [cc\ 2]\,k_2z - [cd.2]\,k_2w \\ & \qquad\qquad - [dd\ 3]\,k_3w \end{aligned}$$

which becomes identical with (80) by assuming

$$\left.\begin{aligned} &[aa]\,k_0 = -f \\ &[ab]\,k_0 + [bb\ 1]\,k_1 = -g \\ &[ac]\,k_0 + [bc\ 1]\,k_1 + [cc\ 2]\,k_2 = -h \\ &[ad]\,k_0 + [bd\ 1]\,k_1 + [cd\ 2]\,k_2 + [dd\ 3]\,k_3 = -i \end{aligned}\right\} \qquad (82)$$

These equations fully determine the coefficients We find k_0 directly from the first, and then k_1, k_2, k_3, by successive substitutions in the others

Now, to find the mean error of X under the form (81), let the mean error of each of the observed quantities n', n'', n''' be denoted by ε (these observed quantities being supposed of equal weight, or, rather, the equations of condition being supposed to have been reduced to the same weight), and let the corresponding mean errors of

$$[an], \qquad [bn\ 1], \qquad [cn\ 2], \qquad [dn.3], \qquad X,$$

be denoted by

$$E_0, \quad E_1, \quad E_2, \quad E_3, \quad (\varepsilon X)$$

Since we have

$$[an] = a'n' + a''n'' + a'''n''' +$$

we have, by Art 22,

$$E_0^2 = [aa]\,\varepsilon^2$$

Again, we have

$$[bn\ 1] = [bn] - \frac{[ab]}{[aa]}[an] = \sum\left[\left(b - \frac{[ab]}{[aa]}a\right)n\right]$$

and hence

$$\begin{aligned} E_1^2 &= \varepsilon^2 \sum\left(b - \frac{[ab]}{[aa]}a\right)^2 \\ &= \varepsilon^2\left([bb] - \frac{2\,[ab]}{[aa]}[ab] + \frac{[ab]^2}{[aa]^2}[aa]\right) \\ &= \varepsilon^2\left([bb] - \frac{[ab]}{[aa]}[ab]\right) \\ &= [bb\ 1]\,\varepsilon^2 \end{aligned}$$

In a similar manner, we have, also,

$$E_2^2 = [cc\ 2]\,\varepsilon^2, \qquad E_3^2 = [dd\ 3]\,\varepsilon^2$$

The quantities x, y, z, w, being determined from the equations (70), their mean errors involve those of the quantities $[an]$, $[bn\ 1]$, $[cn\ 2]$, $[dn\ 3]$, precisely as if the latter had been independently observed quantities affected by the mean errors just determined Hence also in (81) we regard $[an]$, $[bn\ 1]$, &c as independent, and it then follows directly from the principles of Art 22 that

$$(\varepsilon X)^2 = k_0^2 E_0^2 + k_1^2 E_1^2 + k_2^2 E_2^2 + k_3^2 E_3^2$$

or

$$(\varepsilon X)^2 = \left(k_0^2\,[aa] + k_1^2\,[bb\ 1] + k_2^2\,[cc\ 2] + k_3^2\,[dd\ 3]\right)\varepsilon^2 \quad (83)$$

51 From the preceding article we may easily find the formulæ (74) and (79) The function X becomes x when we assume $f = 1$, $g = h = i = l = 0$, and then (81) gives x while (83) gives ε_x^2, and hence the weight $= \frac{\varepsilon^2}{\varepsilon_x^2}$ This hypothesis gives in (82) $[aa]\,k_0 = -1$, and the remaining equations of (82) are identical with the first three of (73) if we put $[bb\ 1]\,k_1 = -A'$, $[cc\ 2]\,k_2 = -A''$, $[dd\ 3]\,k_3 = -A'''$, and then (81) becomes identical with the first of (74), and (83) with the first of (79) In a similar manner we may deduce the remaining equations of (74) and (79)

EXAMPLE —In order to exhibit the numerical operations which the preceding method requires, in their proper order and within the limits of the page, I select an example involving but three unknown quantities The following equations of condition were proposed by GAUSS (*Theoria Motus Corp Coel*, Art 184) to illustrate his method

$$
\begin{array}{ll}
(1) & x - y + 2z = 3 \\
(2) & 3x + 2y - 5z = 5 \\
(3) & 4x + y + 4z = 21 \\
(4) & -2x + 6y + 6z = 28
\end{array}
$$

of which the first three are supposed to have the weight unity, while the last has the weight $\frac{1}{4}$ Multiplying the last by $\sqrt{\frac{1}{4}} = \frac{1}{2}$ (Art 41), the equations of condition, reduced to the same weight, are—

$$
\begin{array}{ll}
(1) & x - y + 2z - 3 = 0 \\
(2) & 3x + 2y - 5z - 5 = 0 \\
(3) & 4x + y + 4z - 21 = 0 \\
(4) & - x + 3y + 3z - 14 = 0
\end{array}
$$

The next step is to form the coefficients $[aa]$, $[ab]$, &c, of the normal equations In the present example this can be done very easily without the aid of logarithms, but, in order to exhibit the work usually required in practice, I shall give the forms for logarithmic computation The sums of the coefficients of the unknown quantities will be employed as checks, according to Art 30 Their logarithms, together with those of a, b, c, n, are given in the following table

	$\log a$	$\log b$	$\log c$	$\log s$	$\log n$
(1)	0 00000	n0 00000	0 30103	0 30103	n0 47712
(2)	0 47712	0 30103	n0 69897	$-\infty$	n0 69897
(3)	0 60206	0 00000	0 60206	0 95424	n1 32222
(4)	n0 00000	0 47712	0 47712	0 69897	n1 14613

It is important, where many operations are to be performed, to write down no more figures than are necessary for the clear prosecution of the work Hence, in combining the preceding logarithms it will be found expedient to proceed as follows Write each $\log a$ upon the lower edge of a slip of paper, then, placing this slip so that $\log a$ shall stand over $\log a$, $\log b$, $\log c$, &c, of the same horizontal line, in succession, add together the

two logarithms *mentally*, and, with the sum *in the head*, take from the logarithmic table the corresponding natural number (aa, ab, ac, as, or an), which place in a column appropriated for the purpose. Then write log b in the same manner, and form bb, bc, bs, bn, and so proceed to form all the coefficients of the normal equations, as in the following table·

	[aa]	[ab]		[ac]		[as]		[an]		[bb]	[bc]	
	+	+	−	+	−	+	−	+	−	+	+	−
(1)	1 0		1 0	2 0		2 0			3 0	1 0		2 0
(2)	9 0	6 0			15 0		0 0		15 0	4 0		10 0
(3)	16 0	4 0		16 0		36 0			84 0	1 0	4 0	
(4)	1 0		3 0		3 0		5 0	14 0		9 0	9 0	
		10 0	4 0	18 0	18 0	38 0	5 0	14 0	102 0		13 0	12 0
	+ 27 0	+ 6 0		0 0		+ 33 0		− 88 0		+ 15 0	+ 1 0	

	[bs]		[bn]		[cc]	[cs]		[cn]		[sn]		[nn]
	+	−	+	−	+	+	−	+	−	+	−	+
(1)		2 0	3 0		4 0	4 0			6 0		6 0	9 0
(2)	0 0			10 0	25 0		0 0	25 0		0 0		25 0
(3)	9 0			21 0	16 0	36 0			84 0		189 0	441 0
(4)	15 0			42 0	9 0	15 0			42 0		70 0	196 0
	24 0	2 0	3 0	73 0		55 0	0 0	25 0	132 0	0 0	265 0	
	+ 22 0		− 70 0		+ 54 0	+ 55 0		− 107 0		− 265 0		+ 671 0

Having ascertained that the results satisfy the test equations (48), we can write out the normal equations as follows·

$$
\begin{aligned}
27x + 6y \phantom{{}+ z} - 88 &= 0 \\
6x + 15y + z - 70 &= 0 \\
y + 54z - 107 &= 0
\end{aligned}
$$

We proceed to determine the values of x, y, z, according to our general formulæ, still carrying out the work with logarithms for the sake of illustration Here, again, system and conciseness are indispensable The whole computation is given below nearly in the form proposed by ENCKE This form corresponds to the group of equations (70) It is divided into three principal compartments, corresponding, respectively, to the first three equations of (70), each beginning one column farther to the right In the first compartment the first line of numbers contains the values of $[aa]$, $[ab]$, &c , the second line their logarithms, and the third line the logarithms of the coefficients of the first equation. The logarithms in this third line are formed by subtracting the first log in the second line from each of the subsequent ones, for this

purpose writing the first logarithm upon the lower edge of a slip of paper

In the second compartment, the first line contains the values of $[bb]$, $[bc]$, &c , the second line, the quantities subtractive from these, according to the formulæ in Art 42 To form these subtractive quantities, write the logarithm of $\frac{[ab]}{[aa]}$ (which is here 9 34679) upon the lower edge of a slip of paper, and hold it successively over log $[ab]$ and each of the subsequent logarithms in the same line, add the two logarithms mentally in each case, take the corresponding natural number from the logarithmic table, and write it in its place below Subtracting these numbers, we have the values of $[bb\ 1]$, $[bc\ 1]$, &c The fourth line contains the logarithms of these quantities; the fifth, the logarithms of the coefficients of our second equation, formed by subtracting the first logarithm of the preceding line from each of the subsequent ones in that line

In the third compartment we have—first, the values of $[cc]$, &c , secondly, the values of the subtractive quantities formed from the last line of the first compartment as before; thirdly, the remainders which are the values of $[cc\ 1]$, &c The fourth line contains the values of the quantities which are subtractive from the preceding and are formed from the last line of the second compartment by adding the first logarithm of that line to the logarithm immediately above it and to each of the subsequent logarithms in the same line, the fifth line contains the remainders which are the values of $[cc\ 2]$, &c , the sixth line, the logarithms of these, and the last line, the logarithms of the coefficients of our third equation

For control, we carry through the operations upon $[as]$, $[bs]$, &c , precisely as upon the other quantities, and then, according to the arrangement of the scheme, we should have, if we have computed correctly, each sum containing s equal to the sum of the quantities on its left in the same line, together with those of the same order in a vertical column over the first number in this line Thus, we must have, in the present case,

$$[bs\ 1] = [bb\ 1] + [bc\ 1] \qquad [sn\ 1] = [bn\ 1] + [cn\ 1]$$
$$[cs\ 1] = [cc\ 1] + [bc\ 1] \qquad [sn\ 2] = [cn\ 2]$$
$$[cs\ 2] = [cc\ 2]$$

relations easily proved by means of the formulæ of Art. 42 combined with (48)

The columns [sn] and [nn] are added to the third compartment in order to form the quantity [nn 3], from which the mean error of observation is to be deduced, as will be shown hereafter

[aa]	[ab]	[ac]	[as]	[an]		
+ 27 000	+ 6 000	0 000	+ 33 000	− 88 000		
1 43136	0 77815	− ∞	1 51851	n1 94448		
	9 34679	− ∞	0 08715	n0 51312		
	[bb]	[bc]	[bs]	[bn]		
− 88 000						
0 000	+ 15 000	+ 1 000	+ 22 000	− 70 000		
+ 21 305	+ 1 333	0 000	+ 7 333	− 19 556		
− 66 695	+ 13 667	+ 1 000	+ 14 667	− 50 444		
n1 82409	1 13566	0 00000	1 16633	n1 70281		
log x = 0 39273		8 86434	0 03067	n0 56715		
		[cc]	[cs]	[cn]	[sn]	[nn]
	− 50 444	+ 54 000	+ 55 000	− 107 000	− 265 000	+ 671 000
	+ 1 916	0 000	0 000	0 000	− 107 555	+ 286 813
	− 48 528	+ 54 000	+ 55 000	− 107 000	− 157 445	+ 384 187
	n1 68599	+ 0 073	+ 1 078	− 3 691	− 54 135	+ 186 191
	log y = 0 55033	+ 53 927	+ 53 927	− 103 309	− 103 310	+ 197 996
		1 73181		n2 01414		+ 197 909
			log (− z) =	n0 28233	[nn 3] =	+ 0 087

After z has been found, its value is substituted in the second equation of (70), and y is deduced Then, the values of y and z being substituted in the first equation, we find x The numerical computations are given above in the margin

Then, for the weights, by Art 47, we have first to find the additional auxiliary

$$[cc\ 1]_a = [cc] - \frac{[bc]}{[bb]}[bc]$$

and by the formulæ of that article we have—

[bb]	[bc]	log [bb 1]	1 13566	log [cc 2]	1 73181
+ 15 000	+ 1 000	log [bb]	1 17609	log [cc 1]	1 73239
1 17609	0 00000			log [cc 1]a	1 73185
	8 82391				
	[cc]		1 43136	1 13566	1 73181
	+ 54 000		9 95957	9 99942	log p_z
	+ 0 067		9 99996	1 13508	
[cc 1a] =	+ 53 933		1 39089	log p_y	
			log p_x		

The final result is then

$$
\begin{aligned}
x &= +\,2.4702 \text{ with the weight } 24.597 \\
y &= +\,3.5508 \quad \text{“} \qquad \text{“} \quad 13.648 \\
z &= +\,1.9157 \quad \text{“} \qquad \text{“} \quad 53.927
\end{aligned}
$$

It only remains to substitute the values of x, y, and z in the original equations of condition, to form the residuals v, and from these to determine the mean error of observation. Since here there are but three unknown quantities, we have, by (71),

$$[vv] = [nn.3]$$

and hence the mean error of an observation of the weight unity is, by (61), m being the number of equations of condition,

$$\varepsilon = \sqrt{\left(\frac{[nn.3]}{m-3}\right)} = 0.295$$

The direct computation of the residuals is, therefore, not necessary for determining ε. nevertheless, it is desirable in most cases to resort to the direct substitution also, not only for a final verification, but in order to examine the several observations, and to obtain the data for rejecting any doubtful one by the use of PEIRCE's Criterion, to be given hereafter. This direct substitution has already been carried out for this example on p. 525, where we have found $[vv] = 0.0804$, which agrees with the above value of $[nn.3]$ as nearly as can be expected with the use of five decimal logarithms.

52. It not unfrequently happens that one of the unknown quantities is such that the given observations cannot determine it with accuracy. For example, in the reduction of a number of observations of an eclipse, one of the unknown quantities is a correction of the moon's parallax, but, unless the places of observation be remote from each other, the correction will be very uncertain, and this uncertainty will affect all the other quantities which enter into the equations of condition. In such a case, this unknown quantity will come out with a small coefficient, which of itself will reveal the existence of the uncertainty when it is not otherwise anticipated. In order that this uncertainty may not affect those quantities which are well defined by the observations, it is expedient to determine all the latter as functions of the uncertain quantity, which for that purpose must be made the

last in the elimination Thus, with four unknown quantities x, y, z, w, we proceed only as far as the auxiliaries denoted by the numeral 2, then, having found the factors A', A'', A''', B'', B''', C''', by (73) or (75), if we put

$$\left.\begin{aligned}
-x' &= \frac{[an]}{[aa]} + \frac{[bn\ 1]}{[bb\ 1]}A' + \frac{[cn\ 2]}{[cc\ 2]}A'' \\
-y' &= \frac{[bn\ 1]}{[bb\ 1]} + \frac{[cn\ 2]}{[cc\ 2]}B'' \\
-z' &= \frac{[cn\ 2]}{[cc\ 2]}
\end{aligned}\right\} \tag{84}$$

these will give the values of the unknown quantities which we should obtain from the first three normal equations if the last unknown quantity were disregarded or put $= 0$ Then, by (74), the final values of x, y, z, as functions of the uncertain quantity w, will be

$$\left.\begin{aligned}
x &= x' + A'''w \\
y &= y' + B'''w \\
z &= z' + C'''w
\end{aligned}\right\} \tag{85}$$

The values of x', y', z', will thus be well determined, and a subsequent independent determination of w will enable us to find the final values of x, y, z *

Having found the weights of x', y', z' (which is done as if they were the only quantities under consideration), and their mean errors ε_x', ε_y', ε_z', then, when the quantity w is afterwards found, the mean errors of the final values will be

$$\left.\begin{aligned}
\varepsilon^2_x &= \varepsilon_x'^2 + (A'''\varepsilon_w)^2 \\
\varepsilon^2_y &= \varepsilon_y'^2 + (B'''\varepsilon_w)^2 \\
\varepsilon^2_z &= \varepsilon_z'^2 + (C'''\varepsilon_w)^2
\end{aligned}\right\} \tag{86}$$

as we find from the equations (79), or by Art. 20.

CONDITIONED OBSERVATIONS.

53 In all that precedes, we have supposed that the several quantities to be found by observation, either directly or indirectly, were independent of each other Although they were required to satisfy certain equations of condition as nearly as possible, yet they were so far independent that no contradiction was involved in supposing the values of one or more of them to be varied without

* For an example in which three unknown quantities are thus determined as functions of *two* uncertain quantities, see Vol I p 540

varying the others By such variations we should obtain systems of values *more or less probable*, but all *possible*

There is a second class of problems, in which, besides the equations of condition which the unknown quantities are to satisfy approximately, there are also equations of condition which they must satisfy exactly so that of all the systems of values which may be selected as approximately satisfying the first kind of equations, only those can be admitted as possible which satisfy exactly the equations of the second kind The number of these rigorous equations of condition must be less than the number of unknown quantities, otherwise they would determine these quantities independently of all observations These rigorous equations, then, may be satisfied by various possible systems of values, and we can therefore express the problem here to be considered as follows *Of all the possible systems of values which exactly satisfy the rigorous equations of condition, to find the most probable, or that system which best satisfies the approximate equations of condition*

The following are simple examples of conditioned observations. The sum of the three angles of a plane triangle must be 180° so that if we observe each angle directly, and the sum of the observed values differs from 180°, these values must be corrected so as to satisfy this condition The sum of the angles of a spherical triangle must be 180° + spherical excess The sum of all the angles around a point, or the sum of all the differences of azimuth observed at a station upon a round of objects in the horizon, must be 360°

The approximate conditions in these cases are expressed by the observations themselves, for the final values adopted must correspond as nearly as possible to the observed values The corrections to be applied to the observed values are to be regarded as residual errors with their signs changed ; and the solution of our problem is involved in the following statement *Of all the systems of corrections which satisfy the rigorous equations, that system is to be received as the most probable in which the sum of the squares of the residuals in the approximate equations is a minimum*

54 The general problem as above stated may be reduced to that of unconditioned observations, already considered For let us suppose there are m' rigorous equations of condition, and m unknown quantities From these m' equations let the values of m' unknown quantities be obtained in terms of the remaining

$m - m'$ quantities, and let these values be substituted in all the approximate equations of condition, then there will be left in the latter only $m - m'$ quantities, which may be treated as independent, so that, the approximate equations being now solved by the method of least squares, we have the values of the $m - m'$ quantities, with which we then find the values of the first m' quantities This is a general solution of the problem, but it is not always the simplest in practice I shall illustrate it by a simple example, before giving a method applicable to more complicated cases

EXAMPLE —At Pine Mount, a station of the U S Coast Survey, the angles between the surrounding stations 1, 2, 3, 4 were observed as follows

			weight
1 2	Joscelyne—Deepwater	65° 11′ 52″ 500	3
2 3	Deepwater—Deakyne	66 24 15 553	3
3 4	Deakyne—Burden .	87 2 24 703	3
4 1	Burden—Joscelyne	141 21 21 757	1

There are here four unknown quantities subjected to the single rigorous condition that their sum must be 360°. But, instead of taking the angles themselves as the unknown quantities, we shall assume approximate values of them, and regard the corrections which they require as the unknown quantities

We assume

1 2	Joscelyne—Deepwater,	$65° 11′ 52″ 5 + w$
2 3	Deepwater—Deakyne,	$66\ 24\ 15\ 5 + x$
3 4	Deakyne—Burden,	$87\ 2\ 24\ 7 + y$
4 1	Burden—Joscelyne,	$141\ 21\ 21\ 8 + z$

the sum of which must satisfy the condition

$$359° 59' 54'' 5 + w + x + y + z = 360°$$

or

$$w + x + y + z - 5'' 5 = 0$$

The difference between the assumed value and the observed value in each case gives us a residual, and the approximate equations of condition are, therefore,

$$\begin{aligned} w - 0 \quad\ \ &= 0 \\ x - 0\ 053 &= 0 \\ y - 0\ 003 &= 0 \\ z + 0\ 043 &= 0 \end{aligned}$$

We have here but one rigorous condition (or $m' = 1$), and to eliminate this we have only to find from it the value of one unknown quantity in terms of the others, and substitute it in the approximate equations of condition thus, substituting the value

$$w = -x - y - z + 5''.5$$

our equations of condition, containing now three independent unknown quantities, are

$$\begin{array}{rcl|c|} & & & \text{weight} \\ -x - y - z + 5''.5 & = & 0 & 3 \\ x \qquad\qquad - 0''.053 & = & 0 & 3 \\ y \qquad - 0''.003 & = & 0 & 3 \\ z - 0''.043 & = & 0 & 1 \end{array}$$

The normal equations, applying the weights, are then

$$\begin{aligned} 6x + 3y + 3z - 16.659 &= 0 \\ 3x + 6y + 3z - 16.509 &= 0 \\ 3x + 3y + 4z - 16.457 &= 0 \end{aligned}$$

which, being solved, give

$$\begin{aligned} x &= +0''.9675 \\ y &= +0.9175 \\ z &= +2.7005 \end{aligned}$$

whence also

$$w = +0.9145$$

and the corrected values of the angles are

1	2	Joscelyne—Deepwater .	65° 11′ 53″.4145
2	3	Deepwater—Deakyne	66 24 16 .4675
3	4	Deakyne—Burden	87 2 25 .6175
4	1	Burden—Joscelyne .	141 21 24 .5005
			360 0 0 .0000

55 When the number of unknown quantities is great, or when there are several rigorous conditions to be satisfied, the preceding method would lead to very tedious computations, since we are required to perform two eliminations, the first from our m' rigorous equations to find the first m' quantities in terms of the others, and the second from our normal equations involving all the remaining quantities. In order to obtain the general form

for a more condensed process, let the most probable values of a number (m) of directly observed quantities be

$$V',\ V'',\ V''',\ \&c\ .\quad V^{(m)}$$

Let the observed values be

$$M',\ M'',\ M''',\ \&c\qquad M^{(m)}$$

Let these observations have the weights

$$p',\ \ p'',\ \ p''',\ \ \&c\qquad p^{(m)}$$

Let the equations which the most probable values are required to satisfy rigorously be expressed by

$$\left.\begin{array}{l} \varphi' = f'\ (V', V'', V''',\quad) = 0 \\ \varphi'' = f''\ (V', V'', V''',\quad) = 0 \\ \varphi''' = f'''\ (V', V'', V''',\quad) = 0 \\ \qquad\qquad \&c \end{array}\right\} \quad (87)$$

and let

$$m' = \text{the number of these conditions}$$

Let the most probable corrections of the observed values be

$$v',\ v'',\ v''',\ \&c\qquad v^{(m)}$$

so that

$$V' = M' + v', \qquad V'' = M'' + v'', \qquad V''' = M''' + v''', \ \&c$$

Let the values of φ', φ'', φ''' . when the observed values are actually substituted be n', n'', n''' . or

$$\left.\begin{array}{l} f'\ (M',\ M'',\ M''',\quad) = n' \\ f''\ (M',\ M'',\ M''',\quad) = n'' \\ f'''\ (M',\ M'',\ M''',\quad) = n''' \\ \qquad\qquad \&c \end{array}\right\} \quad (88)$$

Let the differential coefficients $\frac{d\varphi'}{dV'}, \frac{d\varphi'}{dV''}$, &c , $\frac{d\varphi''}{dV'}, \frac{d\varphi''}{dV''}$, &c be formed, substitute in them the values M', M'', M''' .. for V', V'', V''', and denote the resulting values by a', a'', &c , b', b'', &c.; that is, put

$$\begin{array}{lll} \dfrac{d\varphi'}{dV'} = a', & \dfrac{d\varphi'}{dV''} = a'', & \dfrac{d\varphi'}{dV'''} = a''', \&c \\ \dfrac{d\varphi''}{dV'} = b', & \dfrac{d\varphi''}{dV''} = b'', & \dfrac{d\varphi''}{dV'''} = b''', \&c. \\ \dfrac{d\varphi'''}{dV'} = c', & \dfrac{d\varphi'''}{dV''} = c'', & \dfrac{d\varphi'''}{dV'''} = c''', \&c \end{array}$$

These values of the differential coefficients will generally be sufficiently exact, but if M', M'', M''' . are found very greatly in error, a repetition of the computation might be necessary, in which the more exact values found by the first computation would be used

The values of M', M'', M''' . being assumed to be so nearly correct that the second and higher powers of the corrections v', v'', v''' may be neglected, we have at once, by TAYLOR'S Theorem, as in the similar case of Art 40,

$$\left.\begin{array}{l} \varphi' = n' + a'v' + a''v'' + a'''v''' + \quad + a^{(m)}v^{(m)} = 0 \\ \varphi'' = n'' + b'v' + b''v'' + b'''v''' + \quad + b^{(m)}v^{(m)} = 0 \\ \varphi''' = n''' + c'v' + c''v'' + c'''v''' + \quad + c^{(m)}v^{(m)} = 0 \\ \qquad \&c \qquad\qquad \&c \end{array}\right\} \quad (89)$$

which m' equations must be rigorously satisfied by the values of v', v'', v'''

The equations

$$V' - M' = 0, \qquad V'' - M'' = 0, \qquad V''' - M''' = 0, \&c$$

are the approximate equations of condition, or, more strictly,

$$V' - M' = v', \qquad V'' - M'' = v'', \qquad V''' - M''' = v''', \&c$$

are the equations of condition which are to be satisfied by the most probable system of residuals v', v'', v''' . . These, reduced to the unit of weight by Art 41, become

$$(V' - M')\sqrt{p'} = v'\sqrt{p'}, \qquad (V'' - M'')\sqrt{p''} = v''\sqrt{p''}, \&c \qquad (90)$$

and the most probable residuals $v'\sqrt{p'}$, $v''\sqrt{p''}$ are those the sum of whose squares is a minimum, or we must have

$$p'v'^2 + p''v''^2 + p'''v'''^2 + \&c = \text{a minimum}$$

Putting, then, the differential of this quantity equal to zero, we have

$$p'v'dv' + p''v''dv'' + p'''v'''dv''' + \&c = 0 \qquad (91)$$

If v', v'', v''' were independent of each other, each coefficient of this equation would necessarily be zero (as in Art 28), and then the most probable values of V', V'', V''' . would be the directly observed values M', M'', M''' But this minimum

is here conditioned by the equations (89) If, then, we differentiate (89), the equations

$$\left.\begin{array}{lr} a'dv' + a''dv'' + a'''dv''' + \quad & = 0 \\ b'dv' + b''dv'' + b'''dv''' + \quad & = 0 \\ c'dv' + c''dv'' + c'''dv''' + \quad & = 0 \\ \&c & \end{array}\right\} \quad (92)$$

must coexist with (91)

The number of the equations (92) is m', while the number of differentials is m, and since, by the nature of the case, we must have $m > m'$, we can, by elimination, find from (92) the values of m' differentials in terms of the remaining $m - m'$ differentials Let us suppose this elimination to be performed, and that the values of the first m' differentials, found in terms of the others, are then substituted in (91), we shall thus have an equation in which the remaining $m - m'$ unknown quantities can be regarded as independent, and the coefficients of these $m - m'$ quantities in this final equation will then *severally* be equal to zero We can arrive directly at the result of such an elimination and substitution as follows Multiply the first equation of (92) by A, the second by B, the third by C, &c, and also the equation (91) by -1, and form the sum of all these products Then, if A, B, C are determined so that m' differentials shall disappear from the sum (and they can be so determined, since it only requires m' conditions to determine m' quantities), the final equation obtained will contain only the $m - m'$ remaining differentials But, the latter being independent, their coefficients must also be severally equal to zero, and hence we have, in all, the following m conditional equations:

$$\left.\begin{array}{lr} a'A + b'B + c'C + \quad & - p'v' = 0 \\ a''A + b''B + c''C + \quad & - p''v'' = 0 \\ a'''A + b'''B + c'''C + \quad & - p'''v''' = 0 \\ \&c & \&c \end{array}\right\} \quad (93)$$

If we multiply the first of these by $\frac{a'}{p'}$, the second by $\frac{a''}{p''}$, &c, and add the products, we have, by comparison with the first equation of (89),

$$\left[\frac{aa}{p}\right]A + \left[\frac{ab}{p}\right]B + \left[\frac{ac}{p}\right]C + \quad + n' = 0$$

in which the usual notation for sums is followed In this way we can form m' normal equations containing m' quantities, namely,

$$\left.\begin{array}{l}\left[\frac{aa}{p}\right]A+\left[\frac{ab}{p}\right]B+\left[\frac{ac}{p}\right]C+\quad +n'=0\\ \left[\frac{ab}{p}\right]A+\left[\frac{bb}{p}\right]B+\left[\frac{bc}{p}\right]C+\quad +n''=0\\ \left[\frac{ac}{p}\right]A+\left[\frac{bc}{p}\right]B+\left[\frac{cc}{p}\right]C+\quad +n'''=0\\ \qquad\qquad\&c\end{array}\right\}\quad(94)$$

If the observations are of equal weight, we have only to put $p=1$, or, in other words, omit p

The factors A, B, C are called by GAUSS the *correlatives* of the equations of condition

The equations (94) being resolved by the usual method of elimination (Art 42), the values of the correlatives found are then to be substituted in (93), whence we obtain directly the required corrections,

$$\left.\begin{array}{l}v'=\frac{1}{p'}(a'A+b'B+c'C+\quad)\\ v''=\frac{1}{p''}(a''A+b''B+c''C+\quad)\\ v'''=\frac{1}{p'''}(a'''A+b'''B+c'''C+\quad)\\ \quad\&c\qquad\qquad\&c\end{array}\right\}\quad(95)$$

and hence, finally, the most probable values of the observed quantities, $V'=M'+v'$, $V''=M''+v''$, &c

The comparative simplicity of this process will best be shown by applying it to the example of the preceding article. We there have given, by observation,

$$\begin{array}{llll} M'=65^\circ\ 11'\ 52''\ 500, & p'=3\\ M''=66\ \ 24\ \ 15\ \ 553, & p''=3\\ M'''=87\ \ \ 2\ \ 24\ \ 703, & p'''=3\\ M^{iv}=141\ \ 21\ \ 21\ \ 757, & p^{iv}=1\end{array}$$

with the condition

$$V'+V''+V'''+V^{iv}-360^\circ=0$$

We have, first,

$$a' = a'' = a''' = a^{iv} = 1$$

and when M', M'', &c. are put for V', V'', &c, we have (88)

$$n' = -5''487$$

As we have but one condition, we have also but one correlative A; the equation of condition is, by (89),

$$-5''487 + v' + v'' + v''' + v^{iv} = 0$$

and the single normal equation may be constructed according to the following form.

p	a	$\frac{aa}{p}$
3	1	$\frac{1}{3}$
3	1	$\frac{1}{3}$
3	1	$\frac{1}{3}$
1	1	1

$$\left[\frac{aa}{p}\right] = 2$$

$$2A - 5''487 = 0$$
$$A = +2''7435$$

and hence, by (95),

		Corrected values
$v' = +0\ 9145$		$V' = 65°\ 11'\ 53''\ 4145$
$v'' = +0\ 9145$		$V'' = 66\ \ 24\ \ 16\ \ 4675$
$v''' = +0\ 9145$		$V''' = 87\ \ 2\ \ 25\ \ 6175$
$v^{iv} = +2\ 7435$		$V^{iv} = 141\ \ 21\ \ 24\ \ 5005$
		$360\ \ 0\ \ 0$

agreeing with the result found by the much longer process of the preceding article

56 The further prosecution of this branch of the subject belongs more especially to works on Geodesy For more extended examples, see the special report of Mr C A SCHOTT in the Report of the Superintendent of the U S. Coast Survey for 1854, from which the above example has been drawn Consult also BESSEL'S *Gradmessung in Ostpreussen in* 1838, ROSENBERGER, in the *Astronomische Nachrichten*, Nos 121 and 122, BESSEL, *ibid* No 438, T GALLOWAY, Application of the Method to a Portion

of the Survey of England, in the *Memoirs of the Royal Astronomical Society*, Vol XV, J J BÆYER'S *Kustenvermessung*, FISCHER'S *Geodæsie*, GERLING'S *Ausgleichungs Rechnungen*, DIENGER'S *Ausgleichung der Beobachtungsfehler*, LIAGRE, *Calcul des Probabilités*, and GAUSS, *Supplementum theoriæ combinationis*, &c

CRITERION FOR THE REJECTION OF DOUBTFUL OBSERVATIONS

57 It has been already remarked (p 490) that the number of large errors occurring in practice usually exceeds that given by theory, and that this discrepancy, instead of invalidating the theory of purely "accidental" errors, rather indicates a source or sources of error of an abnormal character, and calls for a criterion by which such abnormal observations may be excluded The criterion proposed by Prof PEIRCE* will be given here with the investigation nearly in the words of its author, and with only some slight changes of notation

58. "In almost every true series of observations, some are found which differ so much from the others as to indicate some abnormal source of error not contemplated in the theoretical discussions, and the introduction of which into the investigations can only serve, in the present state of science, to perplex and mislead the inquirer Geometers have, therefore, been in the habit of rejecting those observations which appeared to them liable to unusual defects, although no exact criterion has been proposed to test and authorize such a procedure, and this delicate subject has been left to the arbitrary discretion of individual computers The object of the present investigation is to produce an exact rule for the rejection of observations, which shall be legitimately derived from the principles of the Calculus of Probabilities

"*It is proposed to determine in a series of m observations the limit of error, beyond which all observations involving so great an error may be rejected, provided there are as many as n such observations.*

"The principle upon which it is proposed to solve this problem is, *that the proposed observations should be rejected when the probability of the system of errors obtained by retaining them is less than that of the system of errors obtained by their rejection multiplied by the probability of making so many, and no more, abnormal observations*

* *Astronomical Journal* (Cambridge, Mass), Vol II p 161

"In determining the probability of these two systems of errors, it must be carefully observed that, because observations are rejected in the second system, the corresponding observations of the first system must be regarded, not as being limited to their actual values, but only as surpassing the limit of rejection."

Let

$\mu =$ the number of unknown quantities,

$m =$ the whole number of observations,

$n =$ the number of observations proposed to be rejected,

$n' = m - n$, the number to be retained,

$\Delta, \Delta', \Delta'', \quad \Delta^{(m)} =$ the system of errors when no observation is rejected,

$\Delta_1, \Delta_1', \Delta_1'', \quad \Delta_1^{(n')} =$ the system of errors when n observations are rejected,

$\varepsilon, \varepsilon_1 =$ the mean errors of the first and second system, respectively,

$y =$ the probability, supposed unknown, of such an abnormal observation that it is rejected on account of its magnitude,

$y' = 1 - y =$ the probability that an observation is not of the abnormal character which involves its rejection,

$\varkappa =$ the ratio of the required limit of error for the rejection of n observations to the mean error ε, so that $\varkappa\varepsilon$ is the limiting error

The probability of an error Δ in the first system will be, by (14) and (21),

$$\varphi\Delta = \frac{1}{\varepsilon\sqrt{2\pi}} e^{-\frac{\Delta^2}{2\varepsilon^2}}$$

and the same form will be used for the second system

The probability of an error which exceeds the limit $\varkappa\varepsilon$ will be expressed by the integral (Arts 8 and 12)

$$2\int_{\Delta=\kappa\varepsilon}^{\Delta=\infty} \varphi\Delta\, d\Delta$$

or, denoting this by $\psi\varkappa$,

$$\psi\varkappa = \frac{2}{\varepsilon\sqrt{2\pi}} \int_{\Delta=\kappa\varepsilon}^{\Delta=\infty} e^{-\frac{\Delta^2}{2\varepsilon^2}}\, d\Delta$$

which, by putting $t = \frac{\Delta}{\varepsilon\sqrt{2}}$, becomes

$$\psi\kappa = \frac{2}{\sqrt{\pi}} \int_{t=\frac{\kappa}{\sqrt{2}}}^{\infty} e^{-tt}\, dt$$

and this may be found directly from Table IX by subtracting the tabular number corresponding to $t = \frac{\varkappa}{\sqrt{2}}$ from unity

The probability of the first system of errors, embodying the condition that n observations exceed the limit $\varkappa\varepsilon$, is

$$P = \varphi\Delta \quad \varphi\Delta' \quad \varphi\Delta'' \qquad \left(\frac{\psi\varkappa}{\varphi(\varkappa\varepsilon)}\right)^n$$

$$= \frac{1}{\varepsilon^{n'}(2\pi)^{\frac{1}{2}n'}}\, e^{-\frac{\Sigma\Delta^2 - n\kappa^2\varepsilon^2}{2\varepsilon^2}} (\psi\kappa)^n$$

in which $\Sigma\Delta^2 = \Delta^2 + \Delta'^2 + \qquad (\Delta^{(n)})^2$, and by (61) we have $\Sigma\Delta^2 = (m - \mu)\,\varepsilon^2$, whence

$$P = \frac{1}{\varepsilon^{n'}(2\pi)^{\frac{1}{2}n'}}\, e^{\frac{1}{2}(-m + \mu + n\kappa^2)} (\psi\varkappa)^n$$

The probability of the second system of errors is

$$P_1 = y^n y'^{n'} \quad \varphi\Delta_1 \quad \varphi\Delta_1' \quad \varphi\Delta_1'' \qquad = \frac{y^n y'^{n'}}{\varepsilon_1^{n'}(2\pi)^{\frac{1}{2}n'}}\, e^{-\frac{\Sigma\Delta_1^2}{2\varepsilon_1^2}}$$

$$= \frac{y^n y'^{n'}}{\varepsilon_1^{n'}(2\pi)^{\frac{1}{2}n'}}\, e^{\frac{1}{2}(-n' + \mu)}$$

To authorize the proposed rejection of n observations, we must have

$$P < P_1$$

which gives at once

$$\left(\frac{\varepsilon_1}{\varepsilon}\right)^{n'} e^{\frac{1}{2}n(\kappa^2 - 1)} (\psi\varkappa)^n < y^n y'^{n'}$$

The value of y must be determined by the condition that P_1 is a maximum, and therefore $y^n y'^{n'} = y^n\,(1 - y)^{n'}$ is a maximum Taking the logarithm of this quantity, and putting its differential equal to zero, we obtain for the maximum

$$\frac{y}{n} = \frac{y'}{n'} = \frac{1 - y}{n'}$$

whence

$$y = \frac{n}{m} \qquad y' = \frac{n'}{m}$$

Putting then

$$\left.\begin{aligned} T^n &= y^n y'^{n'} = \frac{n^n n'^{n'}}{m^m} \\ R &= e^{\frac{1}{2}(\kappa^2 - 1)} (\psi\kappa) \end{aligned}\right\} \quad (96)$$

the limiting value of κ, according to the above inequality, must be that which satisfies the equation

$$\left(\frac{\varepsilon_1}{\varepsilon}\right)^{n'} R^n = T^n$$

which gives the required criterion

The relation of ε_1 to ε must depend on the nature of the equations which correspond to the rejected observations, but it will give a sufficient approximation to assume that the excess of $\Sigma\Delta^2$ over $\Sigma\Delta_1^2$ is only equal to the sum of the squares of the errors of the rejected observations, which gives the equation

$$(m - \mu)\,\varepsilon^2 - n\kappa^2\varepsilon^2 = (m - \mu - n)\,\varepsilon_1^2$$

whence

$$\left(\frac{\varepsilon_1}{\varepsilon}\right)^2 = \frac{m - \mu - n\kappa^2}{m - \mu - n}$$

which combined with the above equation gives

$$\frac{m - \mu - n\kappa^2}{m - \mu - n} = \left(\frac{T}{R}\right)^{\frac{2n}{m-n}}$$

Putting, for brevity,

$$\lambda^2 = \left(\frac{T}{R}\right)^{\frac{2n}{m-n}} \qquad (97)$$

we find

$$\kappa^2 - 1 = \frac{m - \mu - n}{n}\,(1 - \lambda^2) \qquad (98)$$

Table X A gives the logarithms of T and R, computed by (96) with the aid of Table IX We can, therefore, by successive approximations, find the value of κ which satisfies the equations (97) and (98) Since R involves κ, we must first assume an approximate value of κ (which the observed residuals will suggest), with which λ^2 will be computed by (97), and hence κ by (98).

With this first approximate value of $\varkappa$, a new value of log R will be taken from the table, with which a second approximation to $\varkappa$ will be found. Two or three approximations will usually be found sufficient

In the application of this criterion, it is to be remembered that it must not be used to reject n observations unless it has previously rejected $n-1$ observations Hence we must first determine the limiting value of $\varkappa$ for the hypothesis of one doubtful observation, or $n=1$, and if this rejects one or more observations, we can pass to the next hypothesis, $n=2$, or $n=3$, &c.; and so on until we arrive at the limit which excludes no more observations

The above arrangement of the tables is nearly the same as that given by Dr B. A GOULD,* who was the first to prepare such tables and thus render the criterion available to practical computers The only difference is in my table of Log T, which I have found in practice to be more convenient than the corresponding one of Dr. GOULD.

EXAMPLE —"To determine the limit of rejection of one or two observations in the case of fifteen observations of the vertical semidiameters of *Venus*, made by Lieut HERNDON, with the meridian circle at Washington, in the year 1846" In the reduction of these observations, Prof PEIRCE assumed two unknown quantities, and found the following residuals (v).

$-0''\ 30$	$-0''\ 24$	$-1''\ 40$	$+0''\ 18$
$-0\ \ 44$	$+0\ \ 06$	$-0\ \ 22$	$+0\ \ 39$
$+1\ \ 01$	$+0\ \ 63$	$-0\ \ 05$	$+0\ \ 10$
$+0\ \ 48$	$-0\ \ 13$	$+0\ \ 20$	

We have here $m=15$, $\mu=2$, $[vv]=4\ 2545$, whence

$$\varepsilon^2=\frac{4\ 2545}{13}=0\ 3273, \qquad \varepsilon=0''\ 572$$

We first try the hypothesis of *one* doubtful observation, or $n=1$ Assuming $\varkappa=2$, the successive approximations may be made as follows.

* Report of the Superintendent of the U S Coast Survey for 1854, Appendix, p 131*, also *Astron Journal*, Vol. IV p 81.

		1st Approx	2d Approx
	Table X A $\log T$	8 404	8 4044
	" " $\log R$	9 309	9 3062
	$\log \frac{T}{R}$	9 095	9 0982
$\frac{2n}{m-n} = \frac{1}{7}$	$\log \lambda^2$	9 871	9 8712
	$\log (1-\lambda^2)$	9 410	9 4093
$\frac{m-\mu-n}{n} = 12$	$\log 12$	1 079	1 0792
	$\log (x^2-1)$	0 489	0 4885
	$\log x^2$	0 610	0 6106
	x	2 02	2 020

Hence $x\varepsilon = 1'' 16$, which excludes the residual $1''.40$

We may now try the hypothesis $n = 2$. Commencing again with the assumption $x = 2$, we have—

		1st Approx	2d Approx	3d Approx	4th Approx
	$\log T$	8 7210	8 7210	8 7210	8 7210
	$\log R$	9 309	9 3622	9 3544	9 3553
	$\log \frac{T}{R}$	9 412	9 3588	9 3666	9 3657
$\frac{2n}{m-n} = \frac{4}{13}$	$\log \lambda^2$	9 819	9 8027	9 8051	9 8048
	$\log (1-\lambda^2)$	9 531	9 5624	9 5582	9 5587
$\frac{m-\mu-n}{n} = \frac{11}{2}$	$\log \frac{11}{2}$	0 740	0 7404	0 7404	0 7404
	$\log (x^2-1)$	0 271	0 3028	0 2986	0 2991
	$\log x^2$	0 457	0 4783	0 4755	0 4758
	x	1 69	1 734	1 729	1 7295

Hence $x\varepsilon = 0'' 989$, which excludes the residuals $1'' 40$ and $1''.01$.

If we now try the hypothesis $n = 3$, we shall find, in the same manner, $x\varepsilon = 0'' 887$, which does not exclude the residual $0'' 63$: so that the residuals $1'' 40$ and $1''.01$ are in this case the only abnormal ones Rejecting these residuals, we shall now find $\varepsilon_1 = 0'' 339$ *

59 In order to facilitate the application of PEIRCE's Criterion

* For another example, in which there were four unknown quantities, and in which the criterion w s very useful, see p 207 of this volume

in the cases most commonly occurring in practice, Table X (first given by Dr. GOULD) has been computed by the aid of the log T and log R, according to the preceding method

The first page of this table is to be used when there is but one unknown quantity ($\mu = 1$), or for direct observations. It gives, by simple inspection, the value of x^2 for any number of observations from 3 to 60, and for any number of doubtful observations from 1 to 9

The second page is used in the same manner when there are two unknown quantities ($\mu = 2$)

EXAMPLE —Same as in the preceding article —Having found, as above, $\varepsilon^2 = 0.3273$, we first take from Table X for $\mu = 2$ the value of x^2 corresponding to $m = 15$ and $n = 1$, and find

$$x^2 = 4\,080, \text{ whence } x^2\varepsilon^2 = 1\,3354, \qquad x\varepsilon = 1''\,16$$

which rejects the residual 1″ 40

Then, with $m = 15$, $n = 2$, we find, from the same page,

$$x^2 = 2\,991, \qquad x^2\varepsilon^2 = 0.9790, \qquad x\varepsilon = 0''\,989$$

which rejects the two residuals 1″ 40 and 1″ 01

Passing, then, to the hypothesis $n = 3$, we find

$$x^2 = 2\,403, \qquad x^2\varepsilon^2 = 0\,7865, \qquad x\varepsilon = 0''\,887$$

which does not exclude any more residuals

60 The above investigation of the criterion involves some principles, derived from the theory of probabilities, which may seem obscure to those not familiar with that branch of science Indeed, the possibility of establishing any criterion whatever for the rejection of doubtful observations, by the aid of the calculus of probabilities, has been questioned even by so distinguished an astronomer as AIRY.* It is easy, however, to derive an approximate criterion *for the rejection of one doubtful observation*, directly from the fundamental formula upon which the whole theory of the method of least squares is based.

We have seen that the function

* Remarks upon PEIRCE's Criterion, *Astronomical Journal* (Cambridge), Vol IV p 137 Professor WINLOCK's reply to the objections of the Astronomer Royal will be found in the same journal, Vol IV p 145

$$\Theta(\rho t') = \frac{2}{\sqrt{\pi}} \int_0^{\rho t'} e^{-tt}\, dt$$

(the value of which is given in Table IX.A) represents, in general, the number of errors less than $a = rt'$ which may be expected to occur in any extended series of observations when the whole number of observations is taken as unity, r being the probable error of an observation If this be multiplied by the number of observations $= m$, we shall have the actual number of errors less than rt'; and hence the quantity

$$m - m \ \Theta(\rho t') = m\,[1 - \Theta(\rho t')]$$

expresses the number of errors to be expected *greater* than the limit rt'. But if this quantity is less than $\frac{1}{2}$, it will follow that an error of the magnitude rt' will have a greater probability against it than for it, and may therefore be rejected. The limit of rejection *of a single doubtful observation*, according to this simple rule, is, therefore, obtained from the equation

$$\tfrac{1}{2} = m\,[1 - \Theta(\rho t')]$$

or

$$\Theta(\rho t') = \frac{2\,m - 1}{2\,m} \tag{99}$$

If we express the limiting error under the form $\varkappa\varepsilon$, ε being the mean error of an observation, we shall have

$$\varkappa = \frac{rt'}{\varepsilon} = 0\,6745t' \tag{100}$$

With the value of $\Theta(\rho t')$ given by (99), we can find t' from Table IX.A, and hence $\varkappa$ by (100)

Example —To find the limit of rejection of *one* of the observations given on p. 562 We there have $m = 15$, $\varepsilon = 0''\,572$; and hence, by (99), $\Theta(\rho t') = 0\,96667$, which in Table IX.A corresponds to $t' = 3.155$, whence, by (100), $\varkappa = 2\,128$, $\varkappa\varepsilon = 1''\,22$, which agrees very nearly with the limit found by Peirce's Criterion.

By the successive application of this rule (with the necessary modifications), it may be used for the rejection of two or more doubtful observations, and I have, by means of it, prepared a table which agrees so nearly with Table X that, for practical purposes, it may be regarded as identical with that table For the general case, however, when there are several unknown

quantities and several doubtful observations, the modifications which the rule requires render it more troublesome than PEIRCE's formula, and I shall, therefore, not develop it further in this place. What I have given may serve the purpose of giving the reader greater confidence in the correctness and value of PEIRCE's Criterion.

TABLES.

[NOTE —The very complete collection of tables and formulæ prepared by DR ALBRECHT, of the Prussian Geodetic Institute, may be consulted with advantage The title of the work is *Formeln und Hilfstafeln fur Geographische Ortsbestimmungen, nebst Kurzer Anleitung zur Ausführung derselben* (Leipzig, 1879, 8vo, pp 240)]

FOR the explanation of the construction and use of these tables, consult the articles referred to below

TABLE I Mean Refraction (Explanation, Vol I Art 107)

" II A, B, C, D, E, and F, BESSEL'S Refraction Table (Vol I Arts 107, 117, 119, and Vol II Arts 294, 295)

" III Reduction of Latitude and Logarithm of the Earth's Radius (Vol I Arts 81, 82)

" IV Log A and Log B, for computing the Equation of Equal Altitudes (Vol I Arts 140, 141)

" V Reduction to the Meridian Values of

$$m = \frac{2 \sin^2 \frac{1}{2} t}{\sin 1''} \quad \text{and} \quad n = \frac{2 \sin^4 \frac{1}{2} t}{\sin 1''}$$

(Vol I Arts 170, 171)

" VI Logarithms of m and n (Vol I Arts 170, 171)

" VII A and VII B Limits of Circummeridian Altitudes (Vol I Art 175)

" VIII and VIII A For reducing transits over several threads to a common instant (Vol II Arts 173, 187)

" IX and IX A Probability of Errors (Appendix, Arts 12, 14)

" X and X A PEIRCE'S Criterion for the Rejection of doubtful Observations (Appendix, Arts 58, 59)

TABLES FOR CORRECTING LUNAR DISTANCES

" XI Dip of the Sea Horizon (Vol I Art 124)

" XII Augmentation of the Moon's Semidiameter (Vol I Art 130)

" XIII Correction of the Moon's Equatorial Parallax (Vol I Art 97)

TABLE XIV Mean Reduced Refraction for Lunars (Vol I Art 249)

" XIV A Correction of the Mean Refraction for the Height of the Barometer (Vol I Art 249)

" XIV B Correction of the Mean Refraction for the Height of the Thermometer (Vol I Art 249)

" XV Logarithms of A, B, C, D, for correcting Lunar Distances (Vol I Art 249)

" XVI Second Correction of the Lunar Distance (Vol I Art 249)

" XVII A and B For finding the Correction of the Lunar Distance for the Contraction of the Moon's Semidiameter (Vol I Art 249)

" XVIII A and B For finding the Correction of the Lunar Distance for the Contraction of the Sun's Semidiameter (Vol I Art 249)

" XIX For finding the value of *N* for correcting Lunar Distances for the Compression of the Earth (Vol I Art 249)

" XX Correction required on account of Second Differences of the Moon's Motion, in finding the Greenwich Time corresponding to a Corrected Lunar Distance (Vol I Art 66)

TABLE I. Mean Refraction.

Barometer, 30 inches Fahrenheit's Thermometer, 50°

Apparent Zen Dist	Mean Refraction	Apparent Zen Dist	Mean Refraction	Apparent Zen Dist	Mean Refraction	Apparent Zen Dist	Mean Refraction	Apparent Zen Dist	Mean Refraction
° ′	′ ″	° ′	′ ″	° ′	′ ″	° ′	′ ″	° ′	′ ″
0 0	0 0 0	48 0	1 4 7	65 0	2 4 4	75 0	3 34 1	80 30	5 35 1
1 0	0 1 0	20	1 5 4	10	2 5 3	10	3 36 5	35	5 37 9
2 0	0 2 0	40	1 6 2	20	2 6 2	20	3 39 0	40	5 40 7
3 0	0 3 1	49 0	1 7 0	30	2 7 2	30	3 41 6	45	5 43 6
4 0	0 4 1	20	1 7 8	40	2 8 2	40	3 44 2	50	5 46 6
5 0	0 5 1	40	1 8 6	50	2 9 2	50	3 46 8	55	5 49 6
6 0	0 6 1	50 0	1 9 4	66 0	2 10 2	76 0	3 49 5	81 0	5 52 6
7 0	0 7 2	20	1 10 2	10	2 11 2	5	3 50 9	5	5 55 7
8 0	0 8 2	40	1 11 0	20	2 12 2	10	3 52 3	10	5 58 8
9 0	0 9 2	51 0	1 11 9	30	2 13 3	15	3 53 7	15	6 2 0
10 0	0 10 3	20	1 12 7	40	2 14 3	20	3 55 2	20	6 5 2
11 0	0 11 3	40	1 13 6	50	2 15 4	25	3 56 6	25	6 8 5
12 0	0 12 4	52 0	1 14 5	67 0	2 16 4	76 30	3 58 1	81 30	6 11 9
13 0	0 13 5	20	1 15 4	10	2 17 5	35	3 59 6	35	6 15 3
14 0	0 14 5	40	1 16 3	20	2 18 7	40	4 1 0	40	6 18 8
15 0	0 15 6	53 0	1 17 2	30	2 19 8	45	4 2 6	45	6 22 3
16 0	0 16 7	20	1 18 2	40	2 20 9	50	4 4 1	50	6 25 9
17 0	0 17 8	40	1 19 1	50	2 22 1	55	4 5 6	55	6 29 6
18 0	0 18 9	54 0	1 20 1	68 0	2 23 3	77 0	4 7 2	82 0	6 33 3
19 0	0 20 1	20	1 21 0	10	2 24 5	5	4 8 8	5	6 37 1
20 0	0 21 2	40	1 22 0	20	2 25 7	10	4 10 4	10	6 41 0
21 0	0 22 4	55 0	1 23 1	30	2 26 9	15	4 12 0	15	6 44 9
22 0	0 23 6	20	1 24 1	40	2 28 1	20	4 13 6	20	6 48 9
23 0	0 24 7	40	1 25 1	50	2 29 4	25	4 15 3	25	6 53 0
24 0	0 25 9	56 0	1 26 2	69 0	2 30 7	77 30	4 17 0	82 30	6 57 1
25 0	0 27 2	20	1 27 3	10	2 32 0	35	4 18 7	35	7 1 4
26 0	0 28 4	40	1 28 4	20	2 33 3	40	4 20 4	40	7 5 7
27 0	0 29 7	57 0	1 29 5	30	2 34 6	45	4 22 2	45	7 10 1
28 0	0 31 0	20	1 30 7	40	2 36 0	50	4 23 9	50	7 14 6
29 0	0 32 3	40	1 31 8	50	2 37 4	55	4 25 7	55	7 19 2
30 0	0 33 6	58 0	1 33 0	70 0	2 38 8	78 0	4 27 5	83 0	7 23 8
31 0	0 35 0	20	1 34.2	10	2 40 2	5	4 29 4	5	7 28 6
32 0	0 36 4	40	1 35 5	20	2 41 6	10	4 31 2	10	7 33 5
33 0	0 37 8	59 0	1 36 7	30	2 43 1	15	4 33 1	15	7 38 4
34 0	0 39 3	20	1 38 0	40	2 44 6	20	4 35 0	20	7 43 5
35 0	0 40 8	40	1 39 3	50	2 46 1	25	4 36 9	25	7 48 7
36 0	0 42 3	60 0	1 40 6	71 0	2 47 7	78 30	4 38 9	83 30	7 53 9
37 0	0 43 9	20	1 42 0	10	2 49 2	35	4 40 9	35	7 59 3
38 0	0 45 5	40	1 43 4	20	2 50 8	40	4 42 9	40	8 4 8
39 0	0 47 2	61 0	1 44 8	30	2 52 4	45	4 44 9	45	8 10 4
40 0	0 48 9	20	1 46 2	40	2 54 1	50	4 47 0	50	8 16 2
41 0	0 50 6	40	1 47 7	50	2 55 8	55	4 49 1	55	8 22 1
42 0	0 52 5	62 0	1 49 2	72 0	2 57 5	79 0	4 51 2	84 0	8 28 1
20	0 53 1	10	1 50 0	10	2 59 2	5	4 53 4	5	8 34 2
40	0 53 7	20	1 50 7	20	3 1 0	10	4 55 6	10	8 40 4
43 0	0 54 3	30	1 51 5	30	3 2 8	15	4 57 8	15	8 46 8
20	0 55 0	40	1 52 3	40	3 4 6	20	5 0 0	20	8 53 4
40	0 55 6	50	1 53 1	50	3 6 4	25	5 2 3	25	9 0 1
44 0	0 56 2	63 0	1 53 9	73 0	3 8 3	79 30	5 4 6	84 30	9 7 0
20	0 56 9	10	1 54 7	10	3 10 3	35	5 6 9	35	9 14 0
40	0 57 6	20	1 55 5	20	3 12 2	40	5 9 3	40	9 21 2
45 0	0 58 2	30	1 56 4	30	3 14 2	45	5 11 7	45	9 28 6
20	0 58 9	40	1 57 2	40	3 16 3	50	5 14 2	50	9 36 2
40	0 59 6	50	1 58 1	50	3 18 4	55	5 16 7	55	9 44 0
46 0	1 0 3	64 0	1 58 9	74 0	3 20 5	80 0	5 19 2	85 0	9 52
20	1 1 0	10	1 59 8	10	3 22 6	5	5 21 7	86 0	11 44
40	1 1 7	20	2 0 7	20	3 24 8	10	5 24 3	87 0	14 25
47 0	1 2 4	30	2 1 6	30	3 27 1	15	5 27 0	88 0	18 26
20	1 3 2	40	2 2 5	40	3 29 4	20	5 29 6	89 0	24 54
40	1 3 9	50	2 3 4	50	3 31 7	25	5 32 4	90 0	36 29
48 0	1 4 7	65 0	2 4 4	75 0	3 34 1	80 30	5 35 1		

TABLE II. Bessel's Refraction Table.

Zen Dist	A. Arg App Z D				B. Arg True Z D				C. Arg True Z D			
	Log a		A	λ	Log a'		A'	λ'	Log a''		A''	λ''
0° 0′	1 76156				1 76143				6 4458			
		2				2				0		
10 0	1 76154				1 76141				6 4458			
		5				6				2		
20 0	1 76149				1 76135				6 4456			
		10				13				4		
30 0	1 76139				1 76122				6 4452			
		9				10				3		
35 0	1 76130				1 76112				6 4449			
		11				13				3		
40 0	1 76119				1 76099				6 4446			
		15				19				5		
45 0	1 76104			1 0018	1 76080			1 0013	6 4441			1 005
		4				5				2		
46 0	1 76100			1 0019	1 76075			1 0013	6 4439			1 005
		4				5				2		
47 0	1 76096			1 0019	1 76070			1 0014	6 4437			1 005
		4				5				1		
48 0	1 76092			1 0020	1 76065			1 0015	6 4436			1 006
		5				6				2		
49 0	1 76087			1 0021	1 76059			1 0015	6 4434			1 006
		5				6				1		
50 0	1 76082			1 0023	1 76053			1 0016	6 4433			1 006
		5				6				2		
51 0	1 76077			1 0025	1 76047			1 0017	6 4431			1 007
		6				7				2		
52 0	1 76071			1 0026	1 76040			1 0018	6 4429			1 007
		6				8				1		
53 0	1 76065			1 0027	1 76032			1 0019	6 4428			1 008
		7				8				3		
54 0	1 76058			1 0029	1 76024			1 0021	6 4425			1 008
		8				10				3		
55 0	1 76050			1 0031	1 76014			1 0024	6 4422			1 009
		8				10				3		
56 0	1 76042			1 0034	1 76004			1 0026	6 4419			1 010
		9				11				3		
57 0	1 76033			1 0037	1 75993			1 0028	6 4416			1 011
		10				12				4		
58 0	1 76023			1 0040	1 75981			1 0030	6 4412			1 012
		11				14				4		
59 0	1 76012			1 0043	1 75967			1 0032	6 4408			1 013
		11				14				4		
60 0	1 76001			1 0046	1 75953			1 0035	6 4404			1 014
		13				16				4		
61 0	1 75988			1 0049	1 75937			1 0038	6 4400			1 015
		15				18				5		
62 0	1 75973			1 0054	1 75919			1 0041	6 4395			1 016
		16				20				5		
63 0	1 75957			1 0058	1 75899			1 0044	6 4390			1 017
		18				22				6		
64 0	1 75939			1 0063	1 75877			1 0048	6 4384			1 019
		20				25				6		
65 0	1 75919			1 0068	1 75852			1 0052	6 4378			1 020
		22				28				8		
66 0	1 75897			1 0075	1 75824			1 0058	6 4370			1 022
		26				31				9		
67 0	1 75871			1 0083	1 75793			1 0064	6 4361			1 024
		29				36				10		
68 0	1 75842			1 0092	1 75757			1 0071	6 4351			1 026
		33				40				12		
69 0	1 75809			1 0101	1 75717			1 0079	6 4339			1 028
		38				47				13		
70 0	1 75771			1 0111	1 75670			1 0088	6 4326			1 031
		45				55				15		
71 0	1 75726			1 0124	1 75615			1 0099	6 4311			1 034
		51				63				19		
72 0	1 75675			1 0139	1 75552			1 0110	6 4292			1 037
		60				74				21		
73 0	1 75615			1 0156	1 75478			1 0123	6 4271			1 040
		72				88				25		
74 0	1 75543			1 0175	1 75390			1 0140	6 4246			1 043
		86				106				28		
75 0	1 75457			1 0197	1.75284			1 0155	6 4218			1 047
		16				19				4		
10	1 75441			1 0200	1 75265			1 0158	6 4214			1 048
		16				20				4		
20	1 75425			1 0204	1 75245			1 0161	6 4210			1 049
		17				20				5		
30	1 75408			1 0208	1 75225			1 0164	6 4205			1,050
		17				21				5		
40	1 75391			1 0212	1 75204			1 0167	6 4200			1 052
		18				22				6		
50	1 75373			1 0216	1.75182			1 0170	6 4194			1 053
		18				23				6		
76 0	1 75355			1 0220	1 75159			1 0173	6 4188			1 054
		19				23				7		
10	1 75336			1 0225	1 75136			1 0177	6 4181			1 055
		20				24				7		
20	1 75316			1 0230	1.75112			1 0180	6 4174			1 057
		21				25				7		
30	1 75295			1 0235	1 75087			1 0184	6 4167			1 058
		21				27				7		
40	1 75274			1 0241	1 75060			1 0188	6 4160			1 059
		22				27				7		
50	1 75252			1 0246	1 75033			1 0192	6 4153			1 061
		23				28				8		
77 0	1 75229		1 0026	1 0252	1 75005		0 9975	1 0197	6 4145		0 997	1 062

TABLE II. Bessel's Refraction Table.

Zen Dist	A. Arg App Z D: Log a	Diff.	A	λ	B. Arg True Z D: Log a'	Diff.	A'	λ'	C. Arg True Z. D: Log a''	Diff.	A''	λ''
77° 0'	1 75229	24	1 0026	1 0252	1 75005	29	0 9975	1 0197	6 4145	7	0 997	1 062
10	1 75205	25	1 0026	1 0258	1 74976	31	0 9974	1 0202	6 4138	8	0 997	1 064
20	1 75180	25	1 0027	1 0264	1 74945	31	0 9973	1 0208	6 4130	8	0 997	1 066
30	1 75155	26	1 0027	1 0272	1 74914	32	0 9972	1 0213	6 4122	8	0 996	1 067
40	1 75129	28	1 0028	1 0281	1 74882	34	0 9971	1 0219	6 4114	8	0 996	1 069
50	1 75101	29	1 0029	1 0290	1 74848	35	0 9970	1 0226	6 4106	9	0 996	1 071
78 0	1 75072	29	1 0030	1 0299	1 74813	36	0 9970	1 0234	6 4097	9	0 996	1 073
10	1 75043	30	1 0030	1 0308	1 74777	37	0 9969	1 0241	6 4088	10	0 996	1 075
20	1 75013	32	1 0031	1 0318	1 74740	39	0 9968	1 0249	6 4078	11	0 996	1 076
30	1 74981	34	1 0032	1 0328	1 74701	41	0 9967	1 0257	6 4067	11	0 996	1 078
40	1 74947	35	1 0033	1 0338	1 74660	43	0 9967	1 0265	6 4056	12	0 996	1 080
50	1 74912	36	1 0034	1 0347	1 74617	44	0 9966	1 0273	6 4044	12	0 995	1 082
79 0	1 74876	37	1 0035	1 0357	1 74573	46	0 9965	1 0281	6 4032	13	0 995	1 085
10	1 74839	40	1 0036	1 0367	1 74527	49	0 9964	1 0289	6 4019	14	0 995	1 087
20	1 74799	42	1 0037	1 0377	1 74478	50	0 9963	1 0296	6 4005	14	0 995	1 089
30	1 74757	43	1 0038	1 0387	1 74428	52	0 9962	1 0304	6 3991	15	0 995	1 091
40	1 74714	44	1 0039	1 0398	1 74376	55	0 9961	1 0312	6 3976	14	0 995	1 094
50	1 74670	47	1 0040	1 0409	1 74321	58	0 9960	1 0320	6 3962	15	0 994	1 096
80 0	1 74623	50	1 0041	1 0420	1 74263	60	0 9958	1 0329	6 3947	16	0 994	1 099
10	1 74573	52	1 0042	1 0431	1 74203	62	0 9957	1 0337	6 3931	17	0 994	1 102
20	1 74521	53	1 0043	1 0442	1 74141	66	0 9955	1 0346	6 3914	19	0 994	1 105
30	1 74468	56	1 0045	1 0454	1 74075	70	0 9954	1 0354	6 3895	19	0 993	1 108
40	1 74412	60	1 0046	1 0466	1 74005	72	0 9952	1 0363	6 3876	20	0 993	1 112
50	1 74352	64	1 0047	1 0479	1 73933	76	0 9951	1 0372	6 3856	20	0 993	1 115
81 0	1 74288	65	1 0049	1 0493	1 73857	80	0 9949	1 0382	6 3836	20	0 993	1 119
10	1 74223	68	1 0050	1 0508	1 73777	85	0 9948	1 0393	6 3816	21	0 992	1 123
20	1 74155	72	1 0052	1 0523	1 73692	87	0 9946	1 0404	6 3795	21	0 992	1 127
30	1 74083	76	1 0054	1 0540	1 73605	91	0 9944	1 0416	6 3774	22	0 992	1 132
40	1 74007	79	1 0056	1 0559	1 73514	97	0 9942	1 0429	6 3752	24	0 991	1 136
50	1 73928	83	1 0058	1 0579	1 73417	103	0 9940	1 0444	6 3728	26	0 991	1 141
82 0	1 73845	88	1 0060	1 0600	1 73314	107	0 9938	1 0459	6 3702	28	0 991	1 146
10	1 73757	94	1 0062	1 0622	1 73207	112	0 9936	1 0476	6 3674	31	0 990	1 151
20	1 73663	99	1 0065	1 0646	1 73095	121	0 9934	1 0493	6 3643	32	0 990	1 156
30	1 73564	105	1 0067	1 0671	1 72974	128	0 9931	1 0512	6 3611	33	0 989	1 161
40	1 73459	112	1 0070	1 0697	1 72846	135	0 9929	1 0531	6 3578	34	0 989	1 167
50	1 73347	118	1 0073	1 0725	1 72711	142	0 9926	1 0552	6 3544	36	0 988	1 172
83 0	1 73229	124	1 0075	1 0754	1 72569	151	0 9924	1 0573	6 3508	39	0 987	1 178
10	1 73105	131	1 0078	1 0784	1 72418	162	0 9920	1 0594	6 3469	42	0 986	1 183
20	1 72974	142	1 0081	1 0815	1 72256	173	0 9917	1 0617	6 3427	45	0 985	1 188
30	1 72832	151	1 0084	1 0846	1 72083	181	0 9913	1 0640	6 3382	48	0 984	1 193
40	1 72681	162	1 0088	1 0879	1 71902	194	0 9909	1 0664	6 3334	50	0 983	1 199
50	1 72519	173	1 0092	1 0914	1 71708	209	0 9905	1 0688	6 3284	53	0 982	1 204
84 0	1 72346	186	1 0096	1 0951	1 71499	223	0 9901	1 0715	6 3231	57	0 981	1 209
10	1 72160	199	1 0100	1 0992	1 71276	239	0 9897	1 0742	6 3174	59	0 980	1 214
20	1 71961	212	1 0105	1 1036	1 71037	255	0 9893	1 0771	6 3115	63	0 979	1 219
30	1 71749	227	1 0110	1 1082	1 70782	273	0 9888	1 0802	6 3052	65	0 977	1 224
40	1 71522	243	1 0115	1 1130	1 70509	293	0 9882	1 0834	6 2987	68	0 976	1 228
50	1 71279	259	1 0121	1 1178	1 70216	314	0 9876	1 0868	6 2919	72	0 974	1 232
85 0	1 71020		1 0127	1 1229	1 69902		0 9870	1 0903	6 2847		0 973	1 237

TABLE II. Bessel's Refraction Table.

D. *Factor depending upon the Barometer*

Paris lines	Log *B*	English inches	Log *B*	French metres	Log *B*	French metres	Log *B*
315	− 0 02445	27.5	− 0 03191	0.725	− 0 01560	0.760	+ 0 00488
316	− 0 02307	27.6	− 0 03033	0.726	− 0 01500	0.761	+ 0 00545
317	− 0 02170	27.7	− 0 02876	0.727	− 0 01440	0.762	+ 0 00602
318	− 0 02033	27.8	− 0 02720	0.728	− 0 01380	0.763	+ 0 00659
319	− 0 01897	27.9	− 0 02564	0.729	− 0 01321	0.764	+ 0 00716
320	− 0 01761	28.0	− 0 02409	0.730	− 0 01261	0.765	+ 0 00773
321	− 0 01625	28.1	− 0 02254	0.731	− 0 01202	0.766	+ 0 00830
322	− 0 01490	28.2	− 0 02099	0.732	− 0 01142	0.767	+ 0 00886
323	− 0 01356	28.3	− 0 01946	0.733	− 0 01083	0.768	+ 0 00943
324	− 0 01221	28.4	− 0 01793	0.734	− 0 01024	0.769	+ 0 00999
325	− 0 01088	28.5	− 0 01640	0.735	− 0 00965	0.770	+ 0 01056
326	− 0 00954	28.6	− 0 01488	0.736	− 0 00906	0.771	+ 0 01112
327	− 0 00821	28.7	− 0 01336	0.737	− 0 00847	0.772	+ 0 01168
328	− 0 00689	28.8	− 0 01185	0.738	− 0 00788	0.773	+ 0 01225
329	− 0 00556	28.9	− 0 01035	0.739	− 0 00729	0.774	+ 0 01281
330	− 0 00425	29.0	− 0 00885	0.740	− 0 00670	0.775	+ 0 01337
331	− 0 00293	29.1	− 0 00735	0.741	− 0 00612	0.776	+ 0 01393
332	− 0 00162	29.2	− 0 00586	0.742	− 0 00553	0.777	+ 0 01449
333	− 0 00032	29.3	− 0 00438	0.743	− 0 00494	0.778	+ 0 01505
334	+ 0 00099	29.4	− 0 00290	0.744	− 0 00436	0.779	+ 0 01560
335	+ 0 00228	29.5	− 0 00142	0.745	− 0 00378	0.780	+ 0 01616
336	+ 0 00358	29.6	+ 0 00005	0.746	− 0 00319	0.781	+ 0 01672
337	+ 0 00487	29.7	+ 0 00151	0.747	− 0 00261	0.782	+ 0 01727
338	+ 0 00616	29.8	+ 0 00297	0.748	− 0 00203	0.783	+ 0 01783
339	+ 0 00744	29.9	+ 0 00443	0.749	− 0 00145	0.784	+ 0 01838
340	+ 0 00872	30.0	+ 0 00588	0.750	− 0 00087	0.785	+ 0 01894
341	+ 0 00999	30.1	+ 0 00732	0.751	− 0 00029	0.786	+ 0 01949
342	+ 0 01127	30.2	+ 0 00876	0.752	+ 0 00028	0.787	+ 0 02004
343	+ 0 01253	30.3	+ 0 01020	0.753	+ 0 00086	0.788	+ 0 02059
344	+ 0 01380	30.4	+ 0 01163	0.754	+ 0 00144	0.789	+ 0 02114
345	+ 0 01506	30.5	+ 0 01306	0.755	+ 0 00201	0.790	+ 0 02169
346	+ 0 01632	30.6	+ 0 01448	0.756	+ 0 00259	0.791	+ 0 02224
347	+ 0 01757	30.7	+ 0 01589	0.757	+ 0 00316	0.792	+ 0 02279
348	+ 0 01882	30.8	+ 0 01731	0.758	+ 0 00374	0.793	+ 0 02334
349	+ 0 02007	30.9	+ 0 01871	0.759	+ 0 00431	0.794	+ 0 02389
350	+ 0 02131	31.0	+ 0 02012	0.760	+ 0 00488	0.795	+ 0 02443

E. *Factor depending upon the Attached Thermometer*

(F) Fahrenheit (R) Réaumur (C) Centigrade

F	Log *T*	R	Log *T*	C	Log *T*
− 30°	+ 0 00242	− 35°	+ 0 00308	− 35°	+ 0 00246
− 20	+ 0 00203	− 30	+ 0 00264	− 30	+ 0 00211
− 10	+ 0 00164	− 25	+ 0 00220	− 25	+ 0 00176
0	+ 0 00125	− 20	+ 0 00176	− 20	+ 0 00140
+ 10	+ 0 00086	− 15	+ 0 00132	− 15	+ 0 00105
20	+ 0 00047	− 10	+ 0 00088	− 10	+ 0 00070
30	+ 0 00008	− 5	+ 0 00044	− 5	+ 0 00035
40	− 0 00031	0	0 00000	0	0 00000
50	− 0 00070	+ 5	− 0 00044	+ 5	− 0 00035
60	− 0 00109	10	− 0 00088	10	− 0 00070
70	− 0 00148	15	− 0 00131	15	− 0 00105
80	− 0 00186	20	− 0 00175	20	− 0 00140
90	− 0 00225	25	− 0 00218	25	− 0 00175
100	− 0 00264	30	− 0 00262	30	− 0 00210
		35	− 0 00305	35	− 0 00244

$\text{Log } \beta = \log B + \log T.$

TABLE II. Bessel's Refraction Table.

F. *Factor depending upon the External Thermometer*

(F) Fahrenheit (R) Réaumur (C) Centigrade

F	Log γ	F	Log γ	R.	Log γ	C	Log γ
−20°	+ 0 06279	35°	+ 0 01185	−35°	+ 0 08990	−35°	+ 0 07373
−19	+ 0 06181	36	+ 0 01098	−30	+ 0 07829	−30	+ 0 06476
−18	+ 0 06083	37	+ 0 01011	−25	+ 0 06698	−25	+ 0 05596
−17	+ 0 05985	38	+ 0 00924	−24	+ 0 06476	−24	+ 0 05423
−16	+ 0 05887	39	+ 0 00837	−23	+ 0 06254	−23	+ 0 05249
−15	+ 0 05790	40	+ 0 00750	−22	+ 0 06034	−22	+ 0 05077
−14	+ 0 05693	41	+ 0 00664	−21	+ 0 05815	−21	+ 0 04905
−13	+ 0 05596	42	+ 0 00578	−20	+ 0 05596	−20	+ 0 04734
−12	+ 0 05500	43	+ 0 00492	−19	+ 0 05379	−19	+ 0 04564
−11	+ 0 05403	44	+ 0 00406	−18	+ 0 05163	−18	+ 0 04394
−10	+ 0 05307	45	+ 0 00320	−17	+ 0 04948	−17	+ 0 04225
−9	+ 0 05211	46	+ 0 00234	−16	+ 0 04734	−16	+ 0 04057
−8	+ 0 05115	47	+ 0 00149	−15	+ 0 04522	−15	+ 0 03889
−7	+ 0 05020	48	+ 0 00064	−14	+ 0 04310	−14	+ 0 03722
−6	+ 0 04924	49	− 0 00021	−13	+ 0 04099	−13	+ 0 03556
−5	+ 0 04829	50	− 0 00106	−12	+ 0 03889	−12	+ 0 03390
−4	+ 0 04734	51	− 0 00191	−11	+ 0 03681	−11	+ 0 03225
−3	+ 0 04640	52	− 0 00275	−10	+ 0 03473	−10	+ 0 03060
−2	+ 0 04545	53	− 0 00360	−9	+ 0 03266	−9	+ 0 02896
−1	+ 0 04451	54	− 0 00444	−8	+ 0 03060	−8	+ 0 02733
0	+ 0 04357	55	− 0 00528	−7	+ 0 02855	−7	+ 0 02570
+1	+ 0 04263	56	− 0 00612	−6	+ 0 02652	−6	+ 0 02408
2	+ 0 04169	57	− 0 00696	−5	+ 0 02449	−5	+ 0 02247
3	+ 0 04076	58	− 0 00780	−4	+ 0 02247	−4	+ 0 02086
4	+ 0 03982	59	− 0 00863	−3	+ 0 02046	−3	+ 0 01926
5	+ 0 03889	60	− 0 00946	−2	+ 0 01846	−2	+ 0 01766
6	+ 0 03796	61	− 0 01029	−1	+ 0 01646	−1	+ 0 01607
7	+ 0 03704	62	− 0 01112	0	+ 0 01448	0	+ 0 01448
8	+ 0 03611	63	− 0 01195	+1	+ 0 01251	+1	+ 0 01290
9	+ 0 03519	64	− 0 01278	2	+ 0 01054	2	+ 0 01133
10	+ 0 03427	65	− 0 01360	3	+ 0 00859	3	+ 0 00976
11	+ 0 03335	66	− 0 01443	4	+ 0 00664	4	+ 0 00820
12	+ 0 03243	67	− 0 01525	5	+ 0 00470	5	+ 0 00664
13	+ 0 03152	68	− 0 01607	6	+ 0 00277	6	+ 0 00509
14	+ 0 03060	69	− 0 01689	7	+ 0 00085	7	+ 0 00354
15	+ 0 02969	70	− 0 01770	8	− 0 00106	8	+ 0 00200
16	+ 0 02878	71	− 0 01852	9	− 0 00297	9	+ 0 00047
17	+ 0 02787	72	− 0 01933	10	− 0 00486	10	− 0 00106
18	+ 0 02697	73	− 0 02015	11	− 0 00675	11	− 0 00259
19	+ 0 02606	74	− 0 02096	12	− 0 00863	12	− 0 00410
20	+ 0 02516	75	− 0 02177	13	− 0 01050	13	− 0 00562
21	+ 0 02426	76	− 0 02257	14	− 0 01236	14	− 0 00713
22	+ 0 02336	77	− 0 02338	15	− 0 01422	15	− 0 00863
23	+ 0 02247	78	− 0 02419	16	− 0 01607	16	− 0 01013
24	+ 0 02157	79	− 0 02499	17	− 0 01791	17	− 0 01162
25	+ 0 02068	80	− 0 02579	18	− 0 01974	18	− 0 01311
26	+ 0 01979	81	− 0 02659	19	− 0 02156	19	− 0 01459
27	+ 0 01890	82	− 0 02738	20	− 0 02338	20	− 0 01607
28	+ 0 01801	83	− 0 02819	21	− 0 02519	21	− 0 01754
29	+ 0 01713	84	− 0 02898	22	− 0 02699	22	− 0 01901
30	+ 0 01624	85	− 0 02978	23	− 0 02879	23	− 0 02047
31	+ 0 01536	86	− 0 03057	24	− 0 03057	24	− 0 02194
32	+ 0 01448	87	− 0 03136	25	− 0 03235	25	− 0 02338
33	+ 0 01360	88	− 0 03216	30	− 0 04114	30	− 0 03057
34	+ 0 01273	89	− 0 03294	35	− 0 04976	35	− 0 03765
35	+ 0 01185	90	− 0 03373				

Table III. Reduction of Latitude and Logarithm of the Earth's Radius.

Argument φ = Geographical Latitude Compression $= \frac{1}{299.15}$

φ	$\varphi - \varphi'$	Diff	$\log \rho$	Diff
° ′	′ ″	″		
0 0	0 0 00		0 000 0000	
1 0	0 24 02	24 02	9 999 9996	4
2 0	0 48 02	24 00	9982	14
3 0	1 11 95	23 93	9961	21
4 0	1 35 80	23 85	9930	31
5 0	1 59 54	23 74	9891	39
6 0	2 23 12	23 58	9 999 9843	48
7 0	2 46 54	23 42	9786	57
8 0	3 9 76	23 22	9721	65
9 0	3 32 74	22 98	9648	73
10 0	3 55 47	22 73	9566	82
11 0	4 17 92	22 45	9476	90
12 0	4 40 06	22 14	9 999 9377	99
13 0	5 1 85	21 79	9271	106
14 0	5 23 28	21 43	9157	114
15 0	5 44 33	21 05	9035	122
16 0	6 4 95	20 62	8905	130
17 0	6 25 14	20 19	8768	137
18 0	6 44 86	19 72	9 999 8624	144
19 0	7 4 09	19 23	8472	152
20 0	7 22 80	18 71	8314	158
21 0	7 40 99	18 19	8149	165
22 0	7 58 61	17 62	7977	172
23 0	8 15 66	17 05	7799	178
24 0	8 32 10	16 44	9 999 7614	185
25 0	8 47 93	15 83	7424	190
26 0	9 3 12	15 19	7228	196
27 0	9 17 65	14 53	7027	201
28 0	9 31 50	13 85	6820	207
29 0	9 44 66	13 16	6608	212
30 0	9 57 12	12 46	9 999 6392	216
10	9 59 12	2 00	6355	37
20	10 1 11	1 99	6319	36
30	3 07	1 96	6282	37
40	5 02	1 95	6245	37
50	6 94	1 92	6208	37
31 0	10 8 85	1 91	9 999 6171	37
10	10 73	1 88	6134	37
20	12 59	1 86	6096	38
30	14 44	1 85	6059	37
40	16 26	1 82	6021	38
50	18 06	1 80	5984	37
32 0	10 19 84	1 78	9 999 5946	38
10	21 60	1 76	5908	38
20	23 34	1 74	5870	38
30	25 05	1 71	5832	38
40	26 75	1 70	5794	38
50	28 43	1 68	5755	39
33 0	10 30 08	1 65	9 999 5717	38
10	31 71	1 63	5678	39
20	33 32	1 61	5640	38
30	34 91	1 59	5601	39
40	36 48	1 57	5562	39
50	38 03	1 55	5523	39
34 0	10 39 55	1 52	9 999 5484	39
10	41 06	1 51	5445	39
20	42 54	1 48	5406	39
30	44 00	1 46	5367	39
40	45 44	1 44	5327	40
50	46 86	1 42	5288	39
35 0	10 48 25	1 39	9 999 5248	40

φ	$\varphi - \varphi'$	Diff	$\log \rho$	Diff
° ′	′ ″	″		
35 0	10 48 25		9 999 5248	
10	49 63	1 38	5208	40
20	50 98	1 35	5169	39
30	52 31	1 33	5129	40
40	53 62	1 31	5089	40
50	54 90	1 28	5049	40
36 0	10 56 16	1 26	9 999 5009	40
10	57 41	1 25	4969	40
20	58 63	1 22	4929	40
30	59 82	1 19	4888	41
40	11 1 00	1 18	4848	40
50	2 15	1 15	4807	41
37 0	11 3 28	1 13	9 999 4767	40
10	4 39	1 11	4726	41
20	5 47	1 08	4686	40
30	6 54	1 07	4645	41
40	7 58	1 04	4604	41
50	8 59	1 01	4563	41
38 0	11 9 59	1 00	9 999 4522	41
10	10 56	0 97	4481	41
20	11 51	95	4440	41
30	12 44	93	4399	41
40	13 34	90	4358	41
50	14 22	88	4317	41
39 0	11 15 08	86	9 999 4276	41
10	15 92	84	4234	42
20	16 73	81	4193	41
30	17 52	79	4152	41
40	18 29	77	4110	42
50	19 04	75	4069	41
40 0	11 19 76	72	9 999 4027	42
10	20 46	70	3985	42
20	21 13	67	3944	41
30	21 79	66	3902	42
40	22 42	63	3860	42
50	23 02	60	3819	41
41 0	11 23 61	59	9 999 3777	42
10	24 17	56	3735	42
20	24 70	53	3693	42
30	25 22	52	3651	42
40	25 71	49	3609	42
50	26 18	47	3567	42
42 0	11 26 62	44	9 999 3525	42
10	27 04	42	3483	42
20	27 44	40	3441	42
30	27 82	38	3399	42
40	28 17	35	3357	42
50	28 50	33	3315	42
43 0	11 28 80	30	9 999 3273	42
10	29 08	28	3230	43
20	29 34	26	3188	42
30	29 58	24	3146	42
40	29 79	21	3104	42
50	29 98	19	3062	42
44 0	11 30 14	16	9 999 3019	43
10	30 29	15	2977	42
20	30 41	12	2935	42
30	30 50	09	2892	43
40	30 57	07	2850	42
50	30 62	05	2808	42
45 0	30 65	03	9 999 2766	42

TABLE II. Bessel's Refraction Table.

D. *Factor depending upon the Barometer*

Paris lines	Log B	English inches	Log B	French metres	Log B	French metres	Log B
315	— 0 02445	27.5	— 0 03191	0.725	— 0 01560	0.760	+ 0 00488
316	— 0 02307	27.6	— 0 03033	0.726	— 0 01500	0.761	+ 0 00545
317	— 0 02170	27.7	— 0 02876	0.727	— 0 01440	0.762	+ 0 00602
318	— 0 02033	27.8	— 0 02720	0.728	— 0 01380	0.763	+ 0 00659
319	— 0 01897	27.9	— 0 02564	0.729	— 0 01321	0.764	+ 0 00716
320	— 0 01761	28.0	— 0 02409	0.730	— 0 01261	0.765	+ 0 00773
321	— 0 01625	28.1	— 0 02254	0.731	— 0 01202	0.766	+ 0 00830
322	— 0 01490	28.2	— 0 02099	0.732	— 0 01142	0.767	+ 0 00886
323	— 0 01356	28.3	— 0 01946	0.733	— 0 01083	0.768	+ 0 00943
324	— 0 01221	28.4	— 0 01793	0.734	— 0 01024	0.769	+ 0 00999
325	— 0 01088	28.5	— 0 01640	0.735	— 0 00965	0.770	+ 0 01056
326	— 0 00954	28.6	— 0 01488	0.736	— 0 00906	0.771	+ 0 01112
327	— 0 00821	28.7	— 0 01336	0.737	— 0 00847	0.772	+ 0 01168
328	— 0 00689	28.8	— 0 01185	0.738	— 0 00788	0.773	+ 0 01225
329	— 0 00556	28.9	— 0 01035	0.739	— 0 00729	0.774	+ 0 01281
330	— 0 00425	29.0	— 0 00885	0.740	— 0 00670	0.775	+ 0 01337
331	— 0 00293	29.1	— 0 00735	0.741	— 0 00612	0.776	+ 0 01393
332	— 0 00162	29.2	— 0 00586	0.742	— 0 00553	0.777	+ 0 01449
333	— 0 00032	29.3	— 0 00438	0.743	— 0 00494	0.778	+ 0 01505
334	+ 0 00099	29.4	— 0 00290	0.744	— 0 00436	0.779	+ 0 01560
335	+ 0 00228	29.5	— 0 00142	0.745	— 0 00378	0.780	+ 0 01616
336	+ 0 00358	29.6	+ 0 00005	0.746	— 0 00319	0.781	+ 0 01672
337	+ 0 00487	29.7	+ 0 00151	0.747	— 0 00261	0.782	+ 0 01727
338	+ 0 00616	29.8	+ 0 00297	0.748	— 0 00203	0.783	+ 0 01783
339	+ 0 00744	29.9	+ 0 00443	0.749	— 0 00145	0.784	+ 0 01838
340	+ 0 00872	30.0	+ 0 00588	0.750	— 0 00087	0.785	+ 0 01894
341	+ 0 00999	30.1	+ 0 00732	0.751	— 0 00029	0.786	+ 0 01949
342	+ 0 01127	30.2	+ 0 00876	0.752	+ 0 00028	0.787	+ 0 02004
343	+ 0 01253	30.3	+ 0 01020	0.753	+ 0 00086	0.788	+ 0 02059
344	+ 0 01380	30.4	+ 0 01163	0.754	+ 0 00144	0.789	+ 0 02114
345	+ 0 01506	30.5	+ 0 01306	0.755	+ 0 00201	0.790	+ 0 02169
346	+ 0 01632	30.6	+ 0 01448	0.756	+ 0 00259	0.791	+ 0 02224
347	+ 0 01757	30.7	+ 0 01589	0.757	+ 0 00316	0.792	+ 0 02279
348	+ 0 01882	30.8	+ 0 01731	0.758	+ 0 00374	0.793	+ 0 02334
349	+ 0 02007	30.9	+ 0 01871	0.759	+ 0 00431	0.794	+ 0 02389
350	+ 0 02131	31.0	+ 0 02012	0.760	+ 0 00488	0.795	+ 0 02443

E. *Factor depending upon the Attached Thermometer*

(F) Fahrenheit (R) Réaumur (C) Centigrade

F	Log T	R	Log T	C	Log T
— 30°	+ 0 00242	— 35°	+ 0 00308	— 35°	+ 0 00246
— 20	+ 0 00203	— 30	+ 0 00264	— 30	+ 0 00211
— 10	+ 0 00164	— 25	+ 0 00220	— 25	+ 0 00176
0	+ 0 00125	— 20	+ 0 00176	— 20	+ 0 00140
+ 10	+ 0 00086	— 15	+ 0 00132	— 15	+ 0 00105
20	+ 0 00047	— 10	+ 0 00088	— 10	+ 0 00070
30	+ 0 00008	— 5	+ 0 00044	— 5	+ 0 00035
40	— 0 00031	0	0 00000	0	0 00000
50	— 0 00070	+ 5	— 0 00044	+ 5	— 0 00035
60	— 0 00109	10	— 0 00088	10	— 0 00070
70	— 0 00148	15	— 0 00131	15	— 0 00105
80	— 0 00186	20	— 0 00175	20	— 0 00140
90	— 0 00225	25	— 0 00218	25	— 0 00175
100	— 0 00264	30	— 0 00262	30	— 0 00210
		35	— 0 00305	35	— 0 00244

$$\text{Log } \beta = \log B + \log T$$

TABLE II. Bessel's Refraction Table.

F. *Factor depending upon the External Thermometer*

(F) Fahrenheit (R) Réaumur (C) Centigrade

F	Log γ	F	Log γ	R.	Log γ	C	Log γ
— 20°	+ 0 06279	35°	+ 0 01185	— 35°	+ 0 08990	— 35°	+ 0 07373
— 19	+ 0 06181	36	+ 0 01098	— 30	+ 0 07829	— 30	+ 0 06476
— 18	+ 0 06083	37	+ 0 01011	— 25	+ 0 06698	— 25	+ 0 05596
— 17	+ 0 05985	38	+ 0 00924	— 24	+ 0 06476	— 24	+ 0 05423
— 16	+ 0 05887	39	+ 0 00837	— 23	+ 0 06254	— 23	+ 0 05249
— 15	+ 0 05790	40	+ 0 00750	— 22	+ 0 06034	— 22	+ 0 05077
— 14	+ 0 05693	41	+ 0 00664	— 21	+ 0 05815	— 21	+ 0 04905
— 13	+ 0 05596	42	+ 0 00578	— 20	+ 0 05596	— 20	+ 0 04734
— 12	+ 0 05500	43	+ 0 00492	— 19	+ 0 05379	— 19	+ 0 04564
— 11	+ 0 05403	44	+ 0 00406	— 18	+ 0 05163	— 18	+ 0 04394
— 10	+ 0 05307	45	+ 0 00320	— 17	+ 0 04948	— 17	+ 0 04225
— 9	+ 0 05211	46	+ 0 00234	— 16	+ 0 04734	— 16	+ 0 04057
— 8	+ 0 05115	47	+ 0 00149	— 15	+ 0 04522	— 15	+ 0 03889
— 7	+ 0 05020	48	+ 0 00064	— 14	+ 0 04310	— 14	+ 0 03722
— 6	+ 0 04924	49	— 0 00021	— 13	+ 0 04099	— 13	+ 0 03556
— 5	+ 0 04829	50	— 0 00106	— 12	+ 0 03889	— 12	+ 0 03390
— 4	+ 0 04734	51	— 0 00191	— 11	+ 0 03681	— 11	+ 0 03225
— 3	+ 0 04640	52	— 0 00275	— 10	+ 0 03473	— 10	+ 0 03060
— 2	+ 0 04545	53	— 0 00360	— 9	+ 0 03266	— 9	+ 0 02896
— 1	+ 0 04451	54	— 0 00444	— 8	+ 0 03060	— 8	+ 0 02733
0	+ 0 04357	55	— 0 00528	— 7	+ 0 02855	— 7	+ 0 02570
+ 1	+ 0 04263	56	— 0 00612	— 6	+ 0 02652	— 6	+ 0 02408
2	+ 0 04169	57	— 0 00696	— 5	+ 0 02449	— 5	+ 0 02247
3	+ 0 04076	58	— 0 00780	— 4	+ 0 02247	— 4	+ 0 02086
4	+ 0 03982	59	— 0 00863	— 3	+ 0 02046	— 3	+ 0 01926
5	+ 0 03889	60	— 0 00946	— 2	+ 0 01846	— 2	+ 0 01766
6	+ 0 03796	61	— 0 01029	— 1	+ 0 01646	— 1	+ 0 01607
7	+ 0 03704	62	— 0 01112	0	+ 0 01448	0	+ 0 01448
8	+ 0 03611	63	— 0 01195	+ 1	+ 0 01251	+ 1	+ 0 01290
9	+ 0 03519	64	— 0 01278	2	+ 0 01054	2	+ 0 01133
10	+ 0 03427	65	— 0 01360	3	+ 0 00859	3	+ 0 00976
11	+ 0 03335	66	— 0 01443	4	+ 0 00664	4	+ 0 00820
12	+ 0 03243	67	— 0 01525	5	+ 0 00470	5	+ 0 00664
13	+ 0 03152	68	— 0 01607	6	+ 0 00277	6	+ 0 00509
14	+ 0 03060	69	— 0 01689	7	+ 0 00085	7	+ 0 00354
15	+ 0 02969	70	— 0 01770	8	— 0 00106	8	+ 0 00200
16	+ 0 02878	71	— 0 01852	9	— 0 00297	9	+ 0 00047
17	+ 0 02787	72	— 0 01933	10	— 0 00486	10	— 0 00106
18	+ 0 02697	73	— 0 02015	11	— 0 00675	11	— 0 00259
19	+ 0 02606	74	— 0 02096	12	— 0 00863	12	— 0 00410
20	+ 0 02516	75	— 0 02177	13	— 0 01050	13	— 0 00562
21	+ 0 02426	76	— 0 02257	14	— 0 01236	14	— 0 00713
22	+ 0 02336	77	— 0 02338	15	— 0 01422	15	— 0 00863
23	+ 0 02247	78	— 0 02419	16	— 0 01607	16	— 0 01013
24	+ 0 02157	79	— 0 02499	17	— 0 01791	17	— 0 01162
25	+ 0 02068	80	— 0 02579	18	— 0 01974	18	— 0 01311
26	+ 0 01979	81	— 0 02659	19	— 0 02156	19	— 0 01459
27	+ 0 01890	82	— 0 02738	20	— 0 02338	20	— 0 01607
28	+ 0 01801	83	— 0 02819	21	— 0 02519	21	— 0 01754
29	+ 0 01713	84	— 0 02898	22	— 0 02699	22	— 0 01901
30	+ 0 01624	85	— 0 02978	23	— 0 02879	23	— 0 02047
31	+ 0 01536	86	— 0 03057	24	— 0 03057	24	— 0 02194
32	+ 0 01448	87	— 0 03136	25	— 0 03235	25	— 0 02338
33	+ 0 01360	88	— 0 03216	30	— 0 04114	30	— 0 03057
34	+ 0 01273	89	— 0 03294	35	— 0 04976	35	— 0 03765
35	+ 0 01185	90	— 0 03373				

Table III. Reduction of Latitude and Logarithm of the Earth's Radius.

Argument φ = Geographical Latitude Compression $= \dfrac{1}{299\ 15}$

ϕ		$\phi - \phi'$	Diff	$\log \rho$	Diff	ϕ		$\phi - \phi'$	Diff	$\log \rho$	Diff
°	′	′ ″	″			°	′	′ ″	″		
0	0	0 0 00		0 000 0000		35	0	10 48 25		9 999 5248	
1	0	0 24 02	24 02	9 999 9996	4		10	49 63	1 38	5208	40
2	0	0 48 02	24 00	9982	14		20	50 98	1 35	5169	39
3	0	1 11 95	23 93	9961	21		30	52 31	1 33	5129	40
4	0	1 35 80	23 85	9930	31		40	53 62	1 31	5089	40
5	0	1 59 54	23 74	9891	39		50	54 90	1 28	5049	40
6	0	2 23 12	23 58	9 999 9843	48	36	0	10 56 16	1 26	9 999 5009	40
7	0	2 46 54	23 42	9786	57		10	57 41	1 25	4969	40
8	0	3 9 76	23 22	9721	65		20	58 63	1 22	4929	40
9	0	3 32 74	22 98	9648	73		30	59 82	1 19	4888	41
10	0	3 55 47	22 73	9566	82		40	11 1 00	1 18	4848	40
11	0	4 17 92	22 45	9476	90		50	2 15	1 15	4807	41
12	0	4 40 06	22 14	9 999 9377	99	37	0	11 3 28	1 13	9 999 4767	40
13	0	5 1 85	21 79	9271	106		10	4 39	1 11	4726	41
14	0	5 23 28	21 43	9157	114		20	5 47	1 08	4686	40
15	0	5 44 33	21 05	9035	122		30	6 54	1 07	4645	41
16	0	6 4 95	20 62	8905	130		40	7 58	1 04	4604	41
17	0	6 25 14	20 19	8768	137		50	8 59	1 01	4563	41
18	0	6 44 86	19 72	9 999 8624	144	38	0	11 9 59	1 00	9 999 4522	41
19	0	7 4 09	19 23	8472	152		10	10 56	0 97	4481	41
20	0	7 22 80	18 71	8314	158		20	11 51	95	4440	41
21	0	7 40 99	18 19	8149	165		30	12 44	93	4399	41
22	0	7 58 61	17 62	7977	172		40	13 34	90	4358	41
23	0	8 15 66	17 05	7799	178		50	14 22	88	4317	41
24	0	8 32 10	16 44	9 999 7614	185	39	0	11 15 08	86	9 999 4276	41
25	0	8 47 93	15 83	7424	190		10	15 92	84	4234	42
26	0	9 3 12	15 19	7228	196		20	16 73	81	4193	41
27	0	9 17 65	14 53	7027	201		30	17 52	79	4152	41
28	0	9 31 50	13 85	6820	207		40	18 29	77	4110	42
29	0	9 44 66	13 16	6608	212		50	19 04	75	4069	41
30	0	9 57 12	12 46	9 999 6392	216	40	0	11 19 76	72	9 999 4027	42
	10	9 59 12	2 00	6355	37		10	20 46	70	3985	42
	20	10 1 11	1 99	6319	36		20	21 13	67	3944	41
	30	3 07	1 96	6282	37		30	21 79	66	3902	42
	40	5 02	1 95	6245	37		40	22 42	63	3860	42
	50	6 94	1 92	6208	37		50	23 02	60	3819	41
31	0	10 8 85	1 91	9 999 6171	37	41	0	11 23 61	59	9 999 3777	42
	10	10 73	1 88	6134	37		10	24 17	56	3735	42
	20	12 59	1 86	6096	38		20	24 70	53	3693	42
	30	14 44	1 85	6059	37		30	25 22	52	3651	42
	40	16 26	1 82	6021	38		40	25 71	49	3609	42
	50	18 06	1 80	5984	37		50	26 18	47	3567	42
32	0	10 19 84	1 78	9 999 5946	38	42	0	11 26 62	44	9 999 3525	42
	10	21 60	1 76	5908	38		10	27 04	42	3483	42
	20	23 34	1 74	5870	38		20	27 44	40	3441	42
	30	25 05	1 71	5832	38		30	27 82	38	3399	42
	40	26 75	1 70	5794	38		40	28 17	35	3357	42
	50	28 43	1 68	5755	39		50	28 50	33	3315	42
33	0	10 30 08	1 65	9 999 5717	38	43	0	11 28 80	30	9 999 3273	42
	10	31 71	1 63	5678	39		10	29 08	28	3230	43
	20	33 32	1 61	5640	38		20	29 34	26	3188	42
	30	34 91	1 59	5601	39		30	29 58	24	3146	42
	40	36 48	1 57	5562	39		40	29 79	21	3104	42
	50	38 03	1 55	5523	39		50	29 98	19	3062	42
34	0	10 39 55	1 52	9 999 5484	39	44	0	11 30 14	16	9 999 3019	43
	10	41 06	1 51	5445	39		10	30 29	15	2977	42
	20	42 54	1 48	5406	39		20	30 41	12	2935	42
	30	44 00	1 46	5367	39		30	30 50	09	2892	43
	40	45 44	1 44	5327	40		40	30 57	07	2850	42
	50	46 86	1 42	5289	39		50	30 62	05	2808	42
35	0	10 48 25	1 39	9 999 5248	40	45	0	30 65	03	9 999 2766	42

Table III. Reduction of Latitude and Logarithm of the Earth's Radius.

ϕ' = Geocentric Latitude. ρ = Earth's Radius

ϕ	$\phi-\phi'$	Diff	$\log \rho$	Diff	ϕ	$\phi-\phi'$	Diff	$\log \rho$	Diff
° ′	′ ″	″			° ′	′ ″	″		
45 0	11 30 65	0 00	9 999 2766	43	55 0	10 49 74	1 38	9 999 0275	40
10	30 65	02	2723	42	10	48 36	1 39	0235	40
20	30 63	05	2681	42	20	46 97	1 42	0195	40
30	30 58	07	2639	43	30	45 55	1 44	0155	39
40	30 51	09	2596	42	40	44 11	1 46	0116	40
50	30 42	11	2554	42	50	42 65	1 49	0076	39
46 0	11 30 31	14	9 999 2512	42	56 0	10 41 16	1 51	9 999 0037	39
10	30 17	16	2470	43	10	39 65	1 52	9 998 9998	40
20	30 01	19	2427	42	20	38 13	1 55	9958	39
30	29 82	21	2385	42	30	36 58	1 57	9919	39
40	29 61	23	2343	43	40	35 01	1 60	9880	39
50	29 38	26	2300	42	50	33 41	1 61	9841	39
47 0	11 29 12	27	9 999 2258	42	57 0	10 31 80	1 64	9 998 9802	38
10	28 85	31	2216	42	10	30 16	1 66	9764	39
20	28 54	32	2174	42	20	28 50	1 67	9725	39
30	28 22	35	2132	43	30	26 83	1 70	9686	38
40	27 87	37	2089	42	40	25 13	1 73	9648	38
50	27 50	40	2047	42	50	23 40	1 74	9610	39
48 0	11 27 10	41	9 999 2005	42	58 0	10 21 66	1 76	9 998 9571	38
10	26 69	45	1963	42	10	19 90	1 79	9533	38
20	26 24	46	1921	42	20	18 11	1 80	9495	38
30	25 78	49	1879	42	30	16 31	1 83	9457	38
40	25 29	51	1837	42	40	14 48	1 85	9419	37
50	24 78	54	1795	42	50	12 63	1 86	9382	38
49 0	11 24 24	55	9 999 1753	42	59 0	10 10 77	1 89	9 998 9344	37
10	23 69	58	1711	42	10	8 88	1 91	9307	38
20	23 11	61	1669	42	20	6 97	1 93	9269	37
30	22 50	63	1627	41	30	5 04	1 96	9232	37
40	21 87	65	1586	42	40	3 08	1 97	9195	37
50	21 22	67	1544	42	50	1 11	1 99	9158	37
50 0	11 20 55	70	9 999 1502	42	60 0	9 59 12	12 38	9 998 9121	219
10	19 85	72	1460	41	61 0	9 46 74	13 09	8902	214
20	19 13	74	1419	42	62 0	9 33 65	13 80	8688	209
30	18 39	76	1377	42	63 0	9 19 85	14 49	8479	204
40	17 63	79	1335	41	64 0	9 5 36	15 15	8275	198
50	16 84	82	1294	42	65 0	8 50 21	15 81	8077	193
51 0	11 16 02	83	9 999 1252	41	66 0	8 34 40	16 43	9 998 7884	187
10	15 19	86	1211	41	67 0	8 17 97	17 05	7697	180
20	14 33	88	1170	42	68 0	8 0 92	17 63	7517	175
30	13 45	90	1128	41	69 0	7 43 29	18 21	7342	168
40	12 55	93	1087	41	70 0	7 25 08	18 75	7174	161
50	11 62	95	1046	41	71 0	7 6 33	19 27	7013	154
52 0	11 10 67	97	9 999 1005	42	72 0	6 47 06	19 78	9 998 6859	146
10	9 70	99	0963	41	73 0	6 27 28	20 25	6713	140
20	8 71	1 02	0922	41	74 0	6 7 03	20 70	6573	132
30	7 69	1 03	0881	41	75 0	5 46 33	21 13	6441	124
40	6 66	1 06	0840	40	76 0	5 25 20	21 53	6317	116
50	5 60	1 09	0800	41	77 0	5 3 67	21 90	6201	108
53 0	11 4 51	1 11	9 999 0759	41	78 0	4 41 77	22 24	9 998 6093	100
10	3 40	1 13	0718	41	79 0	4 19 53	22 57	5993	92
20	2 27	1 15	0677	40	80 0	3 56 96	22 86	5901	83
30	1 12	1 18	0637	41	81 0	3 34 10	23 12	5818	75
40	10 59 94	1 20	0596	40	82 0	3 10 98	23 35	5743	67
50	58 74	1 22	0556	41	83 0	2 47 63	23 56	5676	57
54 0	10 57 52	1 24	9 999 0515	40	84 0	2 24 07	23 74	9 998 5619	49
10	56 28	1 26	0475	40	85 0	2 0 33	23 89	5570	40
20	55 02	1 29	0435	40	86 0	1 36 44	24 01	5530	32
30	53 73	1 31	0395	40	87 0	1 12 43	24 09	5498	22
40	52 42	1 33	0355	40	88 0	0 48 34	24 16	5476	13
50	51 09	1 35	0315	40	89 0	0 24 18	24 18	5463	5
55 0	10 49 74		9 999 0275		90 0	0 0 00		9 998 5458	

TABLE IV. Log A and Log B.

For Computing the Equation of Equal Altitudes.

For Noon, A — For Midnight, A +	ARGUMENT = ELAPSED TIME.											For Noon or Midnight, B +
Elapsed Time	0^h		1^h		2^h		3^h		4^h		5^h	
	Log A	Log B	Log A	Log B	Log A	Log B	Log A	Log B	Log A	Log B	Log A	Log B
m 0	9 4059	9 4059	9 4072	9 4034	9 4109	9 3959	9 4172	9 3828	9 4260	9 3635	9 4374	9 3369
1	4059	4059	4072	4034	4110	3957	4173	3825	4261	3631	4376	3364
2	4059	4059	4073	4033	4111	3955	4174	3822	4263	3627	4378	3358
3	4059	4059	4073	4032	4112	3953	4175	3820	4265	3624	4380	3353
4	4059	4059	4074	4031	4113	3952	4177	3817	4266	3620	4383	3348
5	9 4059	9 4059	9 4074	9 4030	9 4113	9 3950	9 4178	9 3814	9 4268	9 3616	9 4385	9 3343
6	4060	4059	4074	4029	4114	3948	4179	3811	4270	3612	4387	3337
7	4060	4059	4075	4028	4115	3946	4181	3809	4272	3608	4389	3332
8	4060	4059	4075	4027	4116	3944	4182	3806	4273	3604	4391	3327
9	4060	4059	4076	4026	4117	3943	4183	3803	4275	3600	4393	3321
10	9 4060	9 4059	4 4076	9 4025	9 4118	9 3941	9 4184	9 3800	9 4277	9 3596	9 4396	9 3316
11	4060	4059	4077	4024	4119	3939	4186	3797	4279	3592	4398	3311
12	4060	4058	4077	4023	4120	3937	4187	3794	4280	3588	4400	3305
13	4060	4058	4078	4022	4121	3935	4188	3792	4282	3584	4402	3300
14	4060	4058	4078	4021	4121	3933	4190	3789	4284	3580	4405	3294
15	9 4060	9 4058	9 4079	9 4020	9 4122	9 3931	9 4191	9 3786	9 4286	9 3576	9 4407	9 3289
16	4060	4058	4079	4019	4123	3929	4193	3783	4288	3572	4409	3283
17	4060	4057	4080	4018	4124	3927	4194	3780	4289	3568	4411	3278
18	4061	4057	4080	4017	4125	3925	4195	3777	4291	3564	4414	3272
19	4061	4057	4081	4016	4126	3923	4197	3774	4293	3559	4416	3266
20	9 4061	9 4057	9 4081	9 4015	9 4127	9 3921	9 4198	9 3771	9 4295	9 3555	9 4418	9 3261
21	4061	4056	4082	4014	4128	3919	4199	3768	4297	3551	4420	3255
22	4061	4056	4083	4013	4129	3917	4201	3765	4299	3547	4423	3249
23	4061	4056	4083	4012	4130	3915	4202	3762	4300	3542	4425	3244
24	4061	4055	4084	4010	4131	3913	4204	3759	4302	3538	4427	3238
25	9 4062	9 4055	9 4084	9 4009	9 4132	9 3911	9 4205	9 3756	9 4304	9 3534	9 4430	9 3232
26	4062	4055	4085	4008	4133	3909	4207	3752	4306	3530	4432	3226
27	4062	4054	4086	4007	4134	3907	4208	3749	4308	3525	4434	3220
28	4062	4054	4086	4006	4135	3905	4209	3746	4310	3521	4437	3214
29	4062	4054	4087	4004	4136	3903	4211	3743	4312	3516	4439	3208
30	9 4062	9 4053	9 4087	9 4003	9 4137	9 3900	9 4212	9 3740	9 4314	9 3512	9 4441	9 3203
31	4063	4053	4088	4002	4138	3898	4214	3737	4315	3508	4444	3197
32	4063	4052	4089	4001	4139	3896	4215	3733	4317	3503	4446	3191
33	4063	4052	4089	3999	4140	3894	4217	3730	4319	3499	4448	3185
34	4063	4051	4090	3998	4141	3892	4218	3727	4321	3494	4451	3178
35	9 4064	9 4051	9 4091	9 3997	9 4142	9 3889	9 4220	9 3723	9 4323	9 3490	9 4453	9 3172
36	4064	4050	4091	3995	4144	3887	4221	3720	4325	3485	4456	3166
37	4064	4050	4092	3994	4145	3885	4223	3717	4327	3480	4458	3160
38	4064	4049	4093	3993	4146	3882	4224	3713	4329	3476	4460	3154
39	4065	4049	4093	3991	4147	3880	4226	3710	4331	3471	4463	3148
40	9 4065	9 4048	9 4094	9 3990	9 4148	9 3878	9 4227	9 3707	9 4333	9 3467	9 4465	9 3142
41	4065	4048	4095	3988	4149	3875	4229	3703	4335	3462	4468	3135
42	4065	4047	4095	3987	4150	3873	4231	3700	4337	3457	4470	3129
43	4066	4047	4096	3985	4151	3871	4232	3696	4339	3453	4473	3123
44	4066	4046	4097	3984	4152	3868	4234	3693	4341	3448	4475	3116
45	9 4066	9 4045	9 4097	9 3982	9 4154	9 3866	9 4235	9 3690	9 4343	9 3443	9 4477	9 3110
46	4067	4045	4098	3981	4155	3863	4237	3686	4345	3438	4480	3103
47	4067	4044	4099	3979	4156	3861	4238	3683	4347	3433	4482	3097
48	4067	4043	4100	3978	4157	3859	4240	3679	4349	3429	4485	3091
49	4068	4043	4100	3976	4158	3856	4242	3675	4351	3424	4487	3084
50	9 4068	9 4042	9 4101	9 3975	9 4159	9 3854	9 4243	9 3672	9 4353	9 3419	9 4490	9 3078
51	4068	4041	4102	3973	4161	3851	4245	3668	4355	3414	4492	3071
52	4069	4041	4103	3972	4162	3849	4246	3665	4357	3409	4494	3064
53	4069	4040	4103	3970	4163	3846	4248	3661	4359	3404	4497	3058
54	4069	4039	4104	3969	4164	3843	4250	3657	4361	3399	4500	3051
55	9 4070	9 4038	9 4105	9 3967	9 4165	9 3841	9 4251	9 3654	9 4363	9 3394	9 4503	9 3044
56	4070	4038	4106	3965	4167	3838	4253	3650	4366	3389	4505	3038
57	4071	4037	4107	3964	4168	3836	4255	3646	4368	3384	4508	3031
58	4071	4036	4107	3962	4169	3833	4256	3643	4370	3379	4510	3024
59	4071	4035	4108	3960	4170	3830	4258	3639	4372	3374	4513	3017
60	9 4072	9 4034	9 4109	9 3959	9 4172	9 3828	9 4260	9 3635	9 4374	9 3369	9 4515	9 3010

TABLE IV. Log A and Log B.

For Computing the Equation of Equal Altitudes

For Noon, A — For Midnight, A +	ARGUMENT = ELAPSED TIME											{ For Noon or Midnight, B +
Elapsed Time	6^h		7^h		8^h		9^h		10^h		11^h	
	Log A	Log B	Log A	Log B	Log A	Log B	Log A	Log B	Log A	Log B	Log A	Log B
^{m} 0	9 4515	9 3010	9 4685	9 2530	9 4884	9 1874	9 5115	9 0943	9 5379	8 9509	9 5680	8 6837
1	4518	3003	4688	2520	4888	1861	5119	0925	5384	9478	5685	6770
2	4521	2996	4691	2511	4892	1848	5123	0906	5389	9447	5691	6701
3	4523	2989	4694	2502	4895	1835	5127	0887	5393	9416	5696	6632
4	4526	2982	4697	2492	4899	1822	5132	0867	5398	9384	5701	6560
5	9 4528	9 2975	9 4701	9 2483	9 4902	9 1809	9 5136	9 0848	9 5403	8 9352	9 5707	8 6488
6	4531	2968	4704	2473	4906	1796	5140	0828	5408	9320	5712	6414
7	4534	2961	4707	2463	4910	1782	5144	0809	5412	9287	5718	6339
8	4536	2954	4710	2454	4913	1769	5148	0789	5417	9254	5723	6262
9	4539	2947	4713	2444	4917	1756	5153	0769	5422	9221	5728	6183
10	9 4542	9 2940	9 4716	9 2434	9 4921	9 1742	9 5157	9 0749	9 5427	8 9187	9 5734	8 6103
11	4544	2932	4719	2425	4924	1728	5161	0729	5432	9153	5739	6021
12	4547	2925	4723	2415	4928	1715	5165	0708	5436	9118	5745	5937
13	4550	2918	4726	2405	4932	1701	5169	0688	5441	9083	5750	5852
14	4552	2911	4729	2395	4935	1687	5174	0667	5446	9048	5756	5764
15	9 4555	9 2903	9 4732	9 2385	9 4939	9 1673	9 5178	9 0646	9 5451	8 9013	9 5761	8 5674
16	4558	2896	4735	2375	4943	1659	5182	0625	5456	8977	5767	5583
17	4561	2888	4738	2365	4946	1645	5186	0604	5461	8940	5772	5488
18	4563	2881	4742	2355	4950	1630	5191	0583	5466	8903	5778	5392
19	4566	2873	4745	2344	4954	1616	5195	0561	5470	8866	5783	5293
20	9 4569	9 2866	9 4748	9 2334	9 4958	9 1602	9 5199	9 0540	9 5475	8 8829	9 5789	8 5192
21	4572	2858	4751	2324	4961	1587	5204	0518	5480	8791	5794	5088
22	4574	2850	4755	2313	4965	1573	5208	0496	5485	8752	5800	4981
23	4577	2843	4758	2303	4969	1558	5212	0474	5490	8713	5806	4871
24	4580	2835	4761	2292	4973	1543	5217	0452	5495	8674	5811	4758
25	9 4583	9 2827	9 4764	9 2282	9 4977	9 1528	9 5221	9 0429	9 5500	8 8634	9 5817	8 4641
26	4585	2819	4768	2271	4980	1513	5225	0406	5505	8594	5822	4521
27	4588	2812	4771	2261	4984	1498	5230	0383	5510	8553	5828	4397
28	4591	2804	4774	2250	4988	1483	5234	0360	5515	8512	5834	4270
29	4594	2796	4778	2239	4992	1468	5238	0337	5520	8470	5839	4138
30	9 4597	9 2788	9 4781	9 2228	9 4996	9 1453	9 5243	9 0314	9 5525	8 8427	9 5845	8 4001
31	4600	2780	4784	2217	5000	1437	5247	0290	5530	8384	5851	3860
32	4602	2772	4788	2206	5003	1422	5252	0266	5535	8341	5856	3713
33	4605	2764	4791	2195	5007	1406	5256	0242	5540	8297	5862	3561
34	4608	2756	4794	2184	5011	1390	5261	0218	5545	8253	5868	3403
35	9 4611	9 2747	9 4798	9 2173	9 5015	9 1375	9 5265	9 0194	9 5550	8 8208	9 5874	8 3239
36	4614	2739	4801	2162	5019	1359	5269	0169	5555	8162	5879	3067
37	4617	2731	4804	2151	5023	1343	5274	0144	5560	8115	5885	2888
38	4620	2723	4808	2140	5027	1327	5278	0119	5565	8068	5891	2701
39	4622	2714	4811	2128	5031	1310	5283	0094	5570	8020	5897	2505
40	9 4625	9 2706	9 4815	9 2117	9 5035	9 1294	9 5287	9 0069	9 5576	8 7972	9 5902	8 2299
41	4628	2698	4818	2105	5038	1278	5292	0043	5581	7923	5908	2082
42	4631	2689	4821	2094	5042	1261	5296	0017	5586	7873	5914	1853
43	4634	2681	4825	2082	5046	1244	5301	8 9991	5591	7823	5920	1611
44	4637	2672	4828	2070	5050	1228	5305	9965	5596	7772	5926	1354
45	9 4640	9 2664	9 4832	9 2059	9 5054	9 1211	9 5310	8 9938	9 5601	8 7720	9 5931	8 1080
46	4643	2655	4835	2047	5058	1194	5315	9911	5606	7668	5937	0780
47	4646	2646	4839	2035	5062	1177	5319	9884	5612	7614	5943	0470
48	4649	2638	4842	2023	5066	1159	5324	9857	5617	7560	5949	0128
49	4652	2629	4846	2011	5070	1142	5328	9830	5622	7505	5955	7 9756
50	9 4655	9 2620	9 4849	9 1999	9 5074	9 1125	9 5333	8 9802	9 5627	8 7449	9 5961	7 9348
51	4658	2611	4853	1987	5078	1107	5337	9774	5632	7392	5967	8897
52	4661	2602	4856	1974	5082	1089	5342	9745	5638	7335	5973	8391
53	4664	2593	4860	1962	5086	1072	5347	9717	5643	7276	5979	7817
54	4667	2584	4863	1950	5091	1054	5351	9688	5648	7217	5985	7154
55	9 4670	9 2575	9 4867	9 1937	9 5095	9 1036	9 5356	8 9659	9 5654	8 7156	9 5991	7 6368
56	4673	2566	4870	1925	5099	1017	5361	9630	5659	7094	5997	5405
57	4676	2557	4874	1912	5103	0999	5365	9600	5664	7032	6003	4162
58	4679	2548	4877	1900	5107	0981	5370	9570	5669	6968	6009	2407
59	4682	2539	4881	1887	5111	0962	5375	9540	5675	6903	6015	6 9591
60	9 4685	9 2530	9 4884	9 1874	9 5115	9 0943	9 5379	8 9509	9 5680	8 6837	9 6021	*Inf*

TABLE IV. Log A and Log B.

For Computing the Equation of Equal Altitudes

For Noon, A — For Midnight, A +	ARGUMENT = ELAPSED TIME											For Noon or Midnight, B —
Elapsed Time	12^h		13^h		14^h		15^h		16^h		17^h	
	Log A	Log B	Log A	Log B	Log A	Log B	Log A	Log B	Log A	Log B	Log A	Log B
m												
0	9 6021	*Inf*	9 6406	8 7563	9 6841	9 0971	9 7333	9 3162	9 7895	9 4884	9 8539	9 6383
1	6027	6 9603	6412	7641	6848	1014	7342	3194	7905	4911	8550	6407
2	6033	7 2431	6419	7718	6856	1057	7351	3225	7915	4937	8562	6431
3	6039	4198	6426	7794	6864	1099	7360	3256	7925	4963	8573	6455
4	6045	5453	6433	7868	6872	1141	7369	3287	7935	4990	8585	6478
5	9 6051	7 6428	9 6440	8 7942	9 6879	9 1183	9 7378	9 3319	9 7945	9 5016	9 8597	9 6502
6	6057	7226	6447	8015	6887	1224	7386	3350	7955	5042	8608	6526
7	6063	7902	6454	8087	6895	1265	7395	3380	7965	5068	8620	6550
8	6069	8488	6461	8158	6903	1306	7404	3411	7975	5094	8632	6573
9	6075	9005	6467	8227	6911	1347	7413	3442	7986	5120	8644	6597
10	9 6082	7 9469	9 6474	8 8296	9 6919	9 1387	9 7422	9 3472	9 7996	9 5146	9 8655	9 6621
11	6088	9889	6481	8364	6926	1428	7431	3503	8006	5171	8667	6644
12	6094	8 0273	6488	8432	6934	1468	7440	3533	8016	5197	8679	6668
13	6100	0627	6495	8498	6942	1507	7449	3563	8027	5223	8691	6691
14	6106	0955	6502	8564	6950	1547	7458	3593	8037	5248	8703	6715
15	9 6112	8 1260	9 6509	8 8628	9 6958	9 1586	9 7467	9 3623	9 8047	9 5274	9 8715	9 6738
16	6119	1547	6516	8692	6966	1625	7476	3653	8058	5300	8727	6762
17	6125	1816	6523	8756	6974	1664	7485	3683	8068	5325	8739	6785
18	6131	2071	6530	8818	6982	1703	7494	3713	8078	5351	8751	6809
19	6137	2312	6538	8880	6990	1741	7503	3742	8089	5376	8763	6832
20	9 6144	8 2541	9 6545	8 8941	9 6998	9 1779	9 7512	9 3772	9 8099	9 5401	9 8775	9 6856
21	6150	2759	6552	9002	7006	1817	7522	3801	8110	5427	8787	6879
22	6156	2967	6559	9062	7014	1855	7531	3831	8120	5452	8799	6903
23	6163	3166	6566	9121	7022	1893	7540	3860	8131	5477	8812	6926
24	6169	3357	6573	9180	7030	1930	7549	3889	8141	5502	8824	6949
25	9 6175	8 3540	9 6580	8 9238	9 7038	9 1967	9 7558	9 3918	9 8152	9 5528	9 8836	9 6973
26	6182	3717	6588	9295	7047	2004	7568	3947	8162	5553	8848	6996
27	6188	3887	6595	9352	7055	2041	7577	3976	8173	5578	8861	7019
28	6194	4051	6602	9408	7063	2078	7586	4005	8184	5603	8873	7043
29	6201	4210	6609	9464	7071	2114	7595	4033	8194	5628	8885	7066
30	9 6207	8 4363	9 6616	8 9519	9 7079	9 2150	9 7605	9 4062	9 8205	9 5653	9 8898	9 7089
31	6214	4512	6624	9573	7088	2186	7614	4090	8216	5677	8910	7112
32	6220	4657	6631	9627	7096	2222	7624	4119	8227	5702	8923	7136
33	6226	4796	6638	9681	7104	2258	7633	4147	8237	5727	8935	7159
34	6233	4932	6645	9734	7112	2293	7642	4175	8248	5752	8948	7182
35	9 6239	8 5064	9 6653	8 9787	9 7121	9 2329	9 7652	9 4204	9 8259	9 5777	9 8961	9 7205
36	6246	5192	6660	9839	7129	2364	7661	4232	8270	5801	8973	7228
37	6252	5318	6667	9891	7137	2399	7671	4260	8281	5826	8986	7251
38	6259	5440	6675	9942	7146	2434	7680	4288	8292	5850	8999	7275
39	6265	5559	6682	9993	7154	2468	7690	4316	8303	5875	9011	7298
40	9 6272	8 5675	9 6690	9 0043	9 7162	9 2503	9 7699	9 4343	9 8314	9 5900	9 9024	9 7321
41	6279	5788	6697	0093	7171	2537	7709	4371	8325	5924	9037	7344
42	6285	5899	6704	0142	7179	2571	7718	4399	8336	5948	9050	7367
43	6292	6008	6712	0191	7187	2605	7728	4426	8347	5973	9063	7390
44	6298	6114	6719	0240	7196	2639	7738	4454	8358	5997	9075	7413
45	9 6305	8 6218	9 6727	9 0288	9 7204	9 2673	9 7747	9 4481	9 8369	9 6022	9 9088	9 7436
46	6311	6320	6734	0336	7213	2706	7757	4509	8380	6046	9101	7459
47	6318	6419	6742	0384	7221	2740	7767	4536	8391	6070	9114	7482
48	6325	6517	6749	0431	7230	2773	7776	4563	8402	6094	9127	7505
49	6331	6613	6757	0478	7238	2806	7786	4590	8414	6119	9140	7529
50	9 6338	8 6707	9 6764	9 0524	9 7247	9 2839	9 7796	9 4617	9 8425	9 6143	9 9154	9 7552
51	6345	6799	6772	0570	7256	2872	7806	4644	8436	6167	9167	7575
52	6351	6890	6779	0616	7264	2905	7815	4671	8447	6191	9180	7598
53	6358	6979	6787	0662	7273	2937	7825	4698	8459	6215	9193	7621
54	6365	7067	6795	0707	7281	2970	7835	4725	8470	6239	9206	7644
55	9 6372	8 7153	9 6802	9 0752	9 7290	9 3002	9 7845	9 4752	9 8481	9 6263	9 9220	9 7667
56	6378	7237	6810	0796	7299	3034	7855	4778	8493	6287	9233	7690
57	6385	7321	6818	0840	7307	3066	7865	4805	8504	6311	9246	7713
58	6392	7402	6825	0884	7316	3098	7875	4831	8516	6335	9260	7736
59	6399	7483	6833	0928	7324	3130	7885	4858	8527	6359	9273	7759
60	9 6406	8 7563	9 6841	9 0971	9 7333	9 3162	9 7895	9 4884	9 8539	9 6383	9 9287	9 7782

TABLE IV. Log A and Log B.

For Computing the Equation of Equal Altitudes

For Noon A —, For Midnight, A +	ARGUMENT = ELAPSED TIME.											For Noon or Midnight, B —
Elapsed Time	18^h		19^h		20^h		21^h		22^h		23^h	
	Log A	Log B	Log A	Log B	Log A	Log B	Log A	Log B	Log A	Log B	Log A	Log B
m 0	9 9287	9 7782	0 0172	9 9167	0 1249	0 0625	0 2623	0 2279	0 4523	0 4372	0 7689	0 7652
1	9300	7804	0188	9190	1269	0650	2649	2309	4562	4414	7765	7729
2	9314	7827	0204	9213	1290	0676	2676	2339	4601	4455	7842	7807
3	9327	7850	0221	9237	1310	0701	2702	2370	4640	4497	7920	7886
4	9341	7873	0237	9260	1330	0727	2729	2401	4680	4540	8000	7967
5	9 9355	9 7896	0 0253	9 9284	0 1351	0 0753	0 2756	0 2431	0 4720	0 4582	0 8081	0 8049
6	9368	7919	0270	9307	1371	0779	2783	2462	4761	4625	8163	.8133
7	9382	7942	0286	9331	1392	0805	2810	2493	4801	4668	8247	8218
8	9396	7965	0303	9355	1412	0830	2838	2524	4842	4711	8333	.8305
9	9410	7988	0319	9378	1433	0856	2865	2556	4884	4755	8420	.8393
10	9 9424	9 8011	0 0336	9-9402	0 1454	0 0882	0 2893	0 2587	0 4926	0 4799	0 8508	0 8483
11	9437	8034	0353	9426	1475	0909	2921	2619	4968	4844	8599	8574
12	9451	8057	0370	9449	1496	0935	2949	2650	5010	4889	8691	8667
13	9465	8080	0386	9473	1517	0961	2977	2682	5053	4934	8786	8763
14	9479	8103	0403	9497	1538	0987	3005	2714	5097	4980	8882	8860
15	9 9493	9 8126	0 0420	9 9520	0 1559	0 1013	0 3034	0 2746	0 5140	0 5026	0 8980	0 8959
16	9508	8149	0437	9544	1581	1040	3063	2778	5184	5072	9080	.9060
17	9522	8172	0454	9568	1602	1066	3091	2811	5229	5118	9183	9164
18	9536	8195	0472	9592	1623	1093	3120	2843	5274	5165	9288	9270
19	9550	8218	0489	9616	1645	1119	3150	2876	5319	5213	9396	9378
20	9 9564	9 8241	0 0506	9 9640	0 1667	0 1146	0 3179	0 2909	0 5365	0 5261	0 9506	0 9489
21	9579	8264	0523	9664	1689	1173	3208	2942	5411	5309	9618	9603
22	9593	8287	0541	9687	1711	1200	3238	2975	5458	5358	9734	9719
23	9607	8310	0558	9711	1733	1226	3268	3008	5505	5407	9853	9839
24	9622	8333	0576	9735	1755	1253	3298	3041	5553	5457	9975	9961
25	9 9636	9 8356	0 0593	9 9760	0 1777	0 1280	0 3328	0 3075	0 5601	0 5507	1 0100	1 0087
26	9651	8379	0611	9784	1799	1308	3359	3109	5649	5557	0228	0216
27	9665	8402	0628	9808	1821	1335	3389	3143	5698	5608	0361	0350
28	9680	8425	0646	9832	1844	1362	3420	3177	5748	5660	0497	0487
29	9695	8448	0664	9856	1867	1389	3451	3211	5798	5712	0638	0628
30	9 9709	9 8471	0 0682	9 9880	0 1889	0 1417	0 3482	0 3245	0 5848	0 5764	1 0783	1 0774
31	9724	8494	0700	9904	1912	1444	3514	3280	5899	5817	0934	0925
32	9739	8517	0718	9929	1935	1472	3545	3315	5951	5871	1089	1081
33	9754	8540	0736	9953	1958	1499	3577	3350	6003	5925	1250	1242
34	9769	8563	0754	9977	1981	1527	3609	3385	6056	5979	1416	1409
35	9 9784	9 8586	0 0772	0 0002	0 2004	0 1555	0 3641	0 3420	0 6110	0 6034	1 1590	1 1583
36	9798	8609	0790	0026	2028	1582	3674	3456	6164	6090	1770	1764
37	9813	8632	0809	0051	2051	1610	3706	3491	6218	6147	1958	1952
38	9829	8655	0827	0075	2075	1638	3739	3527	6273	6204	2154	2149
39	9844	8678	0845	0100	2098	1667	3772	3563	6329	6261	2359	2354
40	9 9859	9 8701	0 0864	0 0124	0 2122	0 1695	0 3805	0 3599	0 6386	0 6319	1 2573	1 2569
41	9874	8724	0883	0149	2146	1723	3839	3636	6443	6378	2799	2795
42	9889	8748	0901	0173	2170	1751	3873	3673	6501	6438	3037	3033
43	9904	8771	0920	0198	2194	1780	3907	3710	6560	6498	3288	3285
44	9920	8794	0939	0223	2218	1808	3941	3747	6619	6559	3554	3552
45	9 9935	9 8817	0 0958	0 0248	0 2243	0 1837	0 3975	0 3784	0 6679	0 6621	1 3837	1 3835
46	9951	8840	0976	0272	2267	1866	4010	3822	6740	6684	4140	4138
47	9966	8863	0995	0297	2292	1895	4045	3859	6802	6747	4465	4463
48	9982	8887	1015	0322	2316	1924	4080	3897	6865	6811	4815	4814
49	9998	8910	1034	0347	2341	1953	4115	3936	6928	6876	5196	5195
50	0 0013	9 8933	0 1053	0 0372	0 2366	0 1982	0 4151	0 3974	0 6993	0 6942	1 5613	1 5612
51	0029	8956	1072	0397	2391	2011	4187	4013	7058	7008	6074	6073
52	0044	8980	1092	0422	2416	2040	4223	4052	7124	7076	6588	6587
53	0060	9003	1111	0447	2442	2070	4260	4091	7191	7144	7171	7171
54	0076	9026	1131	0473	2467	2099	4297	4130	7259	7214	7844	7843
55	0 0092	9 9050	0 1150	0 0498	0 2493	0 2129	0 4334	0 4170	0 7328	0 7284	1 8638	1 8038
56	0108	9073	1170	0523	2518	2159	4371	4210	7398	7355	9610	9610
57	0124	9096	1190	0548	2544	2189	4408	4250	7469	7428	2 0863	2 0863
58	0140	9120	1209	0574	2570	2219	4446	4291	7541	7501	2627	2627
59	0156	9143	1229	0599	2596	2249	4485	4331	7615	7576	2 5640	2 5640
60	0 0172	9 9167	0 1249	0 0625	0 2623	0 2279	0 4523	0 4372	0 7689	0 7652	Inf	Inf

Table V. Reduction to the Meridian.

$$m = \frac{2 \sin^2 \frac{1}{2} t}{\sin 1''}$$

t	0^m	1^m	2^m	3^m	4^m	5^m	6^m	7^m	8^m
s	"	"	"	"	"	"	"	"	"
0	0 00	1 96	7 85	17 67	31.42	49 09	70 68	96 20	125 65
1	0 00	2 03	7 98	17 87	31 68	49 41	71.07	96 66	126 17
2	0 00	2 10	8.12	18 07	31 94	49 74	71 47	97 12	126 70
3	0 00	2 16	8 25	18 27	32 20	50 07	71 86	97 58	127 22
4	0 01	2 23	8 39	18 47	32.47	50 40	72 26	98 04	127 75
5	0 01	2 31	8 52	18 67	32.74	50.73	72 66	98 50	128 28
6	0 02	2 38	8 66	18 87	33 01	51 07	73 06	98 97	128 81
7	0 02	2 45	8 80	19 07	33 27	51 40	73.46	99 43	129 34
8	0 03	2 52	8 94	19 28	33 54	51 74	73 86	99 90	129 87
9	0 04	2.60	9 08	19 48	33 81	52 07	74.26	100 37	130 40
10	0 05	2 67	9 22	19 69	34 09	52 41	74 66	100 84	130 94
11	0 06	2 75	9 36	19 90	34 36	52 75	75 06	101 31	131 47
12	0 08	2 83	9 50	20 11	34 64	53 09	75 47	101 78	132 01
13	0 09	2 91	9 64	20 32	34 91	53 43	75 88	102 25	132 55
14	0 11	2 99	9 79	20 53	35 19	53 77	76 29	102 72	133 09
15	0 12	3 07	9 94	20 74	35 46	54 11	76 69	103 20	133 63
16	0 14	3 15	10 09	20 95	35 74	54 46	77 10	103 67	134 17
17	0 16	3 23	10 24	21 16	36 02	54 80	77 51	104 15	134 71
18	0 18	3 32	10 39	21 38	36 30	55 15	77 93	104 63	135 25
19	0 20	3 40	10 54	21 60	36 58	55 50	78 34	105 10	135 80
20	0 22	3 49	10 69	21 82	36 87	55 84	78 75	105 58	136 34
21	0 24	3 58	10 84	22 03	37 15	56 19	79 16	106 06	136 88
22	0 26	3 67	11 00	22 25	37 44	56 55	79 58	106 55	137 43
23	0 28	3 76	11 15	22 47	37 72	56 90	80 00	107 03	137 98
24	0.31	3 85	11 31	22 70	38 01	57 25	80 42	107 51	138 53
25	0 34	3 94	11 47	22.92	38 30	57 60	80 84	107 99	139 08
26	0 37	4.03	11 63	23 14	38 59	57 96	81 26	108 48	139 63
27	0 40	4 12	11 79	23 37	38 88	58 32	81 68	108 97	140 18
28	0 43	4 22	11 95	23 60	39 17	58 68	82.10	109 46	140 74
29	0 46	4 32	12 11	23 82	39 46	59 03	82 52	109 95	141 29
30	0 49	4.42	12 27	24 05	39.76	59 40	82 95	110 44	141 85
31	0 52	4.52	12 43	24 28	40 05	59.75	83 38	110 93	142 40
32	0 56	4.62	12.60	24 51	40 35	60 11	83 81	111 43	142 96
33	0 59	4.72	12 76	24 74	40.65	60 47	84 23	111 92	143 52
34	0 63	4.82	12 93	24.98	40 95	60.84	84 66	112 41	144 08
35	0 67	4.92	13 10	25 21	41.25	61 20	85 09	112.90	144 64
36	0 71	5 03	13 27	25 45	41 55	61 57	85 52	113 40	145 20
37	0 75	5 13	13 44	25 68	41 85	61 94	85 95	113 90	145 76
38	0 79	5 24	13 62	25 92	42 15	62 31	86 39	114 40	146 33
39	0.83	5 34	13 79	26.16	42 45	62.68	86.82	114 90	146 89
40	0 87	5 45	13 96	26 40	42 76	63 05	87 26	115 40	147 46
41	0 91	5 56	14 13	26 64	43 06	63.42	87 70	115 90	148 03
42	0 96	5 67	14 31	26 88	43 37	63 79	88 14	116 40	148 60
43	1 01	5 78	14 49	27 12	43 68	64 16	88 57	116 90	149 17
44	1 06	5 90	14 67	27 37	43 99	64 54	89 01	117 41	149 74
45	1 10	6 01	14 85	27 61	44 30	64 91	89.45	117 92	150 31
46	1 15	6 13	15 03	27 86	44 61	65 29	89 89	118 43	150 88
47	1 20	6 24	15 21	28 10	44 92	65 67	90 33	118 94	151 45
48	1 26	6.36	15 39	28 35	45 24	66 05	90 78	119 45	152 03
49	1 31	6.48	15 57	28 60	45 55	66 43	91 23	119 96	152 61
50	1 36	6 60	15 76	28 85	45 87	66 81	91 68	120 47	153 19
51	1.42	6 72	15 95	29 10	46 18	67 19	92 12	120 98	153 77
52	1 48	6.84	16 14	29 36	46 50	67 58	92 57	121 49	154 35
53	1 53	6 96	16 32	29 61	46 82	67 96	93 02	122 01	154 93
54	1 59	7.09	16.51	29 86	47 14	68 35	93 47	122 53	155 51
55	1 65	7 21	16 70	30 12	47 46	68 73	93 92	123 05	156 09
56	1 71	7 34	16 89	30 38	47 79	69 12	94 38	123 57	156 67
57	1 77	7 46	17 08	30 64	48 11	69.51	94 83	124 09	157 25
58	1 83	7 60	17 28	30 90	48 43	69 90	95 29	124 61	157 84
59	1 89	7 72	17 47	31 16	48.76	70.29	95 74	125 13	158 43

$$m = \frac{2 \sin^2 \frac{1}{2} t}{\sin 1''}$$

t	9m	10m	11m	12m	13m	14m	15m	16m
s	"	"	"	"	"	"	"	"
0	159.02	196.32	237.54	282.68	331.74	384.74	441.63	502.46
1	159.61	196.97	238.26	283.47	332.59	385.65	442.62	503.50
2	160.20	197.63	238.98	284.26	333.44	386.56	443.60	504.55
3	160.80	198.28	239.70	285.04	334.29	387.48	444.58	505.60
4	161.39	198.94	240.42	285.83	335.15	388.40	445.56	506.65
5	161.98	199.60	241.14	286.62	336.00	389.32	446.55	507.70
6	162.58	200.26	241.87	287.41	336.86	390.24	447.54	508.76
7	163.17	200.92	242.60	288.20	337.72	391.16	448.53	509.81
8	163.77	201.59	243.33	289.00	338.58	392.09	449.51	510.86
9	164.37	202.25	244.06	289.79	339.44	393.01	450.50	511.92
10	164.97	202.92	244.79	290.58	340.30	393.94	451.50	512.98
11	165.57	203.58	245.52	291.38	341.16	394.86	452.49	514.03
12	166.17	204.25	246.25	292.18	342.02	395.79	453.48	515.09
13	166.77	204.92	246.98	292.98	342.88	396.72	454.48	516.15
14	167.37	205.59	247.72	293.78	343.75	397.65	455.47	517.21
15	167.97	206.26	248.45	294.58	344.62	398.58	456.47	518.27
16	168.58	206.93	249.19	295.38	345.49	399.52	457.47	519.34
17	169.19	207.60	249.93	296.18	346.36	400.45	458.47	520.40
18	169.80	208.27	250.67	296.99	347.23	401.38	459.47	521.47
19	170.41	208.94	251.41	297.79	348.10	402.32	460.47	522.53
20	171.02	209.62	252.15	298.60	348.97	403.26	461.47	523.60
21	171.63	210.30	252.89	299.40	349.84	404.20	462.48	524.67
22	172.24	210.98	253.63	300.21	350.71	405.14	463.48	525.74
23	172.85	211.66	254.37	301.02	351.58	406.08	464.48	526.81
24	173.47	212.34	255.12	301.83	352.46	407.02	465.49	527.89
25	174.08	213.02	255.87	302.64	353.34	407.96	466.50	528.96
26	174.70	213.70	256.62	303.46	354.22	408.90	467.51	530.03
27	175.32	214.38	257.37	304.27	355.10	409.84	468.52	531.11
28	175.94	215.07	258.12	305.09	355.98	410.79	469.53	532.18
29	176.56	215.75	258.87	305.90	356.86	411.73	470.54	533.26
30	177.18	216.44	259.62	306.72	357.74	412.68	471.55	534.33
31	177.80	217.12	260.37	307.54	358.62	413.63	472.57	535.41
32	178.43	217.81	261.12	308.36	359.51	414.59	473.58	536.50
33	179.05	218.50	261.88	309.18	360.39	415.54	474.60	537.58
34	179.68	219.19	262.64	310.00	361.28	416.49	475.62	538.67
35	180.30	219.88	263.39	310.82	362.17	417.44	476.64	539.75
36	180.93	220.58	264.15	311.65	363.07	418.40	477.65	540.83
37	181.56	221.27	264.91	312.47	363.96	419.35	478.67	541.91
38	182.19	221.97	265.68	313.30	364.85	420.31	479.70	543.00
39	182.82	222.66	266.44	314.12	365.75	421.27	480.72	544.09
40	183.46	223.36	267.20	314.95	366.64	422.23	481.74	545.18
41	184.09	224.06	267.96	315.78	367.53	423.19	482.77	546.27
42	184.72	224.76	268.73	316.61	368.42	424.15	483.79	547.36
43	185.35	225.46	269.49	317.44	369.31	425.11	484.82	548.45
44	185.99	226.16	270.26	318.27	370.21	426.07	485.85	549.55
45	186.63	226.86	271.02	319.10	371.11	427.04	486.88	550.64
46	187.27	227.57	271.79	319.94	372.01	428.01	487.91	551.73
47	187.91	228.27	272.56	320.78	372.91	428.97	488.94	552.83
48	188.55	228.98	273.34	321.62	373.82	429.93	489.97	553.93
49	189.19	229.68	274.11	322.45	374.72	430.90	491.01	555.03
50	189.83	230.39	274.88	323.29	375.62	431.87	492.05	556.13
51	190.47	231.10	275.65	324.13	376.52	432.84	493.08	557.24
52	191.12	231.81	276.43	324.97	377.43	433.82	494.12	558.34
53	191.76	232.52	277.20	325.81	378.34	434.79	495.15	559.44
54	192.41	233.24	277.98	326.66	379.26	435.76	496.19	560.55
55	193.06	233.95	278.76	327.50	380.17	436.73	497.23	561.65
56	193.71	234.67	279.55	328.35	381.08	437.71	498.28	562.76
57	194.36	235.38	280.33	329.19	381.99	438.69	499.32	563.87
58	195.01	236.10	281.12	330.04	382.90	439.67	500.37	564.98
59	195.66	236.82	281.90	330.89	383.82	440.65	501.41	566.08

Table V. Reduction to the Meridian.

$$m = \frac{2\sin^2 \frac{1}{2} t}{\sin 1''}$$

t	17m	18m	19m	20m	21m	22m	23m	24m	25m
s	″	″	″	″	″	″	″	″	″
0	567.2	635.9	708.4	784.9	865.3	949.6	1037.8	1129.9	1225.9
1	568.3	637.0	709.7	786.2	866.6	951.0	1039.3	1131.4	1227.5
2	569.4	638.2	710.9	787.5	868.0	952.4	1040.8	1133.0	1229.2
3	570.5	639.4	712.1	788.8	869.4	953.8	1042.3	1134.6	1230.8
4	571.6	640.6	713.4	790.1	870.8	955.3	1043.8	1136.2	1232.5
5	572.8	641.7	714.6	791.4	872.1	956.7	1045.3	1137.8	1234.1
6	573.9	642.9	715.9	792.7	873.5	958.2	1046.8	1139.3	1235.7
7	575.0	644.1	717.1	794.0	874.9	959.6	1048.3	1140.9	1237.3
8	576.1	645.3	718.4	795.4	876.3	961.1	1049.8	1142.5	1239.0
9	577.2	646.5	719.6	796.7	877.6	962.5	1051.3	1144.0	1240.6
10	578.4	647.7	720.9	798.0	879.0	963.9	1052.8	1145.6	1242.3
11	579.5	648.9	722.1	799.3	880.4	965.4	1054.3	1147.2	1243.9
12	580.6	650.0	723.4	800.7	881.8	966.9	1055.9	1148.8	1245.6
13	581.7	651.2	724.6	802.0	883.2	968.3	1057.4	1150.4	1247.2
14	582.9	652.4	725.9	803.3	884.6	969.8	1058.9	1152.0	1248.9
15	584.0	653.6	727.2	804.6	886.0	971.2	1060.4	1153.6	1250.5
16	585.1	654.8	728.4	806.0	887.4	972.7	1062.0	1155.2	1252.2
17	586.2	656.0	729.7	807.3	888.8	974.1	1063.5	1156.8	1253.8
18	587.4	657.2	730.9	808.6	890.2	975.5	1065.0	1158.3	1255.5
19	588.5	658.4	732.2	809.9	891.6	977.0	1066.5	1159.9	1257.1
20	589.6	659.6	733.5	811.3	893.0	978.5	1068.1	1161.5	1258.8
21	590.8	660.8	734.7	812.6	894.4	979.9	1069.6	1163.1	1260.5
22	591.9	662.0	736.0	813.9	895.8	981.4	1071.1	1164.7	1262.2
23	593.0	663.2	737.3	815.2	897.2	982.9	1072.6	1166.3	1263.8
24	594.2	664.4	738.5	816.6	898.6	984.4	1074.2	1167.9	1265.5
25	595.3	665.6	739.8	817.9	900.0	985.8	1075.7	1169.5	1267.1
26	596.5	666.8	741.1	819.2	901.4	987.3	1077.2	1171.1	1268.8
27	597.6	668.0	742.3	820.5	902.8	988.8	1078.7	1172.7	1270.5
28	598.7	669.2	743.6	821.9	904.2	990.3	1080.3	1174.3	1272.1
29	599.9	670.4	744.9	823.2	905.6	991.8	1081.8	1175.9	1273.7
30	601.0	671.6	746.2	824.6	907.0	993.2	1083.3	1177.5	1275.4
31	602.2	672.8	747.4	825.9	908.4	994.7	1084.8	1179.1	1277.1
32	603.3	674.1	748.7	827.3	909.8	996.2	1086.4	1180.7	1278.8
33	604.5	675.3	750.0	828.6	911.2	997.6	1087.9	1182.3	1280.4
34	605.6	676.5	751.3	829.9	912.6	999.1	1089.5	1183.9	1282.1
35	606.8	677.7	752.6	831.2	914.0	1000.6	1091.0	1185.5	1283.8
36	607.9	678.9	753.8	832.6	915.5	1002.1	1092.6	1187.1	1285.5
37	609.1	680.1	755.1	833.9	916.9	1003.5	1094.1	1188.7	1287.1
38	610.2	681.3	756.4	835.3	918.3	1005.0	1095.7	1190.3	1288.8
39	611.4	682.6	757.7	836.6	919.7	1006.5	1097.2	1191.9	1290.5
40	612.5	683.8	759.0	838.0	921.1	1008.0	1098.8	1193.5	1292.2
41	613.7	685.0	760.2	839.3	922.5	1009.4	1100.3	1195.1	1293.8
42	614.8	686.2	761.5	840.7	923.9	1010.9	1101.9	1196.7	1295.5
43	616.0	687.4	762.8	842.0	925.3	1012.4	1103.4	1198.3	1297.2
44	617.2	688.7	764.1	843.4	926.8	1013.9	1105.0	1199.9	1298.9
45	618.3	689.9	765.4	844.7	928.2	1015.4	1106.5	1201.5	1300.5
46	619.5	691.1	766.7	846.1	929.6	1016.9	1108.1	1203.1	1302.2
47	620.6	692.4	768.0	847.5	931.0	1018.4	1109.6	1204.7	1303.9
48	621.8	693.6	769.3	848.9	932.4	1019.9	1111.2	1206.4	1305.6
49	623.0	694.8	770.6	850.2	933.8	1021.4	1112.7	1208.0	1307.3
50	624.1	696.0	771.9	851.6	935.2	1022.8	1114.3	1209.6	1309.0
51	625.3	697.3	773.1	852.9	936.6	1024.3	1115.8	1211.2	1310.7
52	626.5	698.5	774.5	854.3	938.1	1025.8	1117.4	1212.9	1312.4
53	627.6	699.7	775.7	855.7	939.5	1027.3	1118.9	1214.5	1314.1
54	628.8	701.0	777.1	857.1	940.9	1028.8	1120.5	1216.1	1315.7
55	630.0	702.2	778.4	858.4	942.3	1030.3	1122.0	1217.7	1317.4
56	631.2	703.5	779.7	859.8	943.8	1031.8	1123.6	1219.4	1319.1
57	632.3	704.7	781.0	861.1	945.2	1033.3	1125.1	1221.0	1320.8
58	633.5	705.9	782.3	862.5	946.6	1034.8	1126.7	1222.6	1322.5
59	634.7	707.1	783.6	863.9	948.1	1036.3	1128.3	1224.2	1324.2

$$m = \frac{2 \sin^2 \frac{1}{2} t}{\sin 1''}$$

t	26^m	27^m	28^m	29^m
s	″	″	″	″
0	1325 9	1429 7	1537 5	1649 0
1	1327 6	1431 4	1539 3	1650 9
2	1329 3	1433 2	1541 1	1652 8
3	1331 0	1434 9	1542 9	1654 7
4	1332 7	1436 7	1544 8	1656 6
5	1334 4	1438 5	1546 6	1658 5
6	1336 1	1440 3	1548 4	1660 4
7	1337 8	1442 1	1550 2	1662 3
8	1339 5	1443 9	1552 1	1664 2
9	1341 2	1445 6	1553 9	1666 1
10	1342 9	1447 4	1555 8	1668 0
11	1344 6	1449 2	1557 6	1669 9
12	1346 3	1451 0	1559 5	1671 9
13	1348 0	1452 8	1561 3	1673 8
14	1349 7	1454 5	1563 2	1675 7
15	1351 4	1456 3	1565 0	1677 6
16	1353 2	1458 1	1566 9	1679 5
17	1354 9	1459 9	1568 7	1681 4
18	1356 6	1461 6	1570 5	1683 3
19	1358 3	1463 4	1572 4	1685 2
20	1360 1	1465 2	1574 3	1687 2
21	1361 8	1466 9	1576 1	1689 1
22	1363 5	1468 7	1578 0	1691 0
23	1365 2	1470 5	1579 8	1692 9
24	1367 0	1472 3	1581 7	1694 8
25	1368 7	1474 1	1583 5	1696 7
26	1370 4	1475 9	1585 3	1698 6
27	1372 1	1477 7	1587 2	1700 5
28	1373 9	1479 5	1589 1	1702 5
29	1375 6	1481 3	1590 9	1704 4
30	1377 3	1483 1	1592 7	1706 3
31	1379 0	1484 9	1594 6	1708 2
32	1380 8	1486 7	1596 5	1710 2
33	1382 5	1488 5	1598 3	1712 1
34	1384 2	1490 3	1600 2	1714 0
35	1385 9	1492 1	1602 1	1715 9
36	1387 7	1493 9	1604 0	1717 9
37	1389 4	1495 7	1605 9	1719 8
38	1391 2	1497 5	1607 7	1721 7
39	1392 9	1499 3	1609 6	1723 6
40	1394 7	1501 1	1611 5	1725 6
41	1396 4	1502 9	1613 3	1727 5
42	1398 2	1504 7	1615 2	1729 5
43	1399 9	1506 5	1617 1	1731 5
44	1401 7	1508 4	1619 0	1733 4
45	1403 4	1510 2	1620 8	1735 3
46	1405 2	1512 0	1622 7	1737 2
47	1406 9	1513 8	1624 6	1739 2
48	1408 7	1515 6	1626 5	1741 2
49	1410 4	1517 4	1628 3	1743 1
50	1412 2	1519 2	1630 2	1745 1
51	1413 9	1521 0	1632 1	1747 0
52	1415 7	1522 9	1634 0	1749 0
53	1417 4	1524 7	1635 9	1750 9
54	1419 2	1526 5	1637 7	1752 8
55	1420 9	1528 3	1639 6	1754 8
56	1422 7	1530 2	1641 5	1756 8
57	1424 4	1532 0	1643 3	1758 7
58	1426 2	1533 8	1645 2	1760 7
59	1427 9	1535 6	1647 1	1762 6

$$n = \frac{2 \sin^4 \frac{1}{2} t}{\sin 1''}$$

For rate

t	n	t	n	Rate	Log k
m s	″	m s	″	s	
0 0	0 00	20 0	1 49	− 30	9 999 6985
1 0	0 00	10	1 54	29	7085
2 0	0 00	20	1 60	28	7186
3 0	0 00	30	1 65	27	7286
4 0	0 00	40	1 70	26	7387
5 0	0 01	50	1 76	25	7487
6 0	0 01	21 0	1 82	24	7588
7 0	0 02	10	1 87	23	7688
8 0	0 04	20	1 93	22	7789
9 0	0 06	30	1 99	21	7889
10 0	0 09	40	2 06	20	7990
11 0	0 14	50	2 12	19	8090
12 0	0 19	22 0	2 19	18	8191
10	0 20	10	2 25	17	8291
20	0 22	20	2 32	16	8392
30	0 23	30	2 39	15	8492
40	0 24	40	2 46	14	8593
50	0 25	50	2 54	13	8693
13 0	0 26	23 0	2 61	12	8794
10	0 28	10	2 69	11	8894
20	0 30	20	2 77	10	8995
30	0 31	30	2 85	9	9095
40	0 33	40	2 93	8	9196
50	0 34	50	3 01	7	9296
14 0	0 36	24 0	3 10	6	9397
10	0 38	10	3 18	5	9497
20	0 39	20	3 27	4	9598
30	0 41	30	3 36	3	9698
40	0 43	40	3 45	2	9799
50	0 45	50	3 55	− 1	9 999 9899
15 0	0 47	25 0	3 64	0	0 000 0000
10	0 49	10	3 74	+ 1	0101
20	0 52	20	3 84	2	0201
30	0 54	30	3 94	3	0302
40	0 56	40	4 05	4	0402
50	0 59	50	4 15	5	0503
16 0	0 61	26 0	4 26	6	0603
10	0 64	10	4 37	7	0704
20	0 67	20	4 48	8	0804
30	0 69	30	4 60	9	0905
40	0 72	40	4 72	10	1005
50	0 75	50	4 83	11	1106
17 0	0 78	27 0	4 96	12	1206
10	0 81	10	5 08	13	1307
20	0 84	20	5 20	14	1407
30	0 88	30	5 33	15	1508
40	0 91	40	5 46	16	1608
50	0 95	50	5 60	17	1709
18 0	0 98	28 0	5 73	18	1809
10	1 02	10	5 87	19	1910
20	1 06	20	6 01	20	2010
30	1 09	30	6 15	21	2111
40	1 13	40	6 30	22	2212
50	1 18	50	6 44	23	2312
19 0	1 22	29 0	6 59	24	2412
10	1 26	10	6 75	25	2513
20	1 30	20	6 90	26	2613
30	1 35	30	7 06	27	2714
40	1 40	40	7 22	28	2814
50	1 44	50	7 38	29	2915
20 0	1 49	30 0	7 55	+ 30	0 000 3015

Table VI. Logarithms of m and n.

$$m = \frac{2 \sin^2 \frac{1}{2} t}{\sin 1''}$$

log m

t	0^m	1^m	2^m	3^m	4^m	5^m	6^m	7^m
s 0	— ∞	0 29303	0 89509	1 24727	1 49714	1 69096	1 84931	1 98320
1	6 73673	30739	90230	25208	50076	69385	85172	98526
2	7 33879	32151	90945	25687	50435	·69673	85412	98732
3	7 69097	33541	91654	26163	·50793	69960	85651	98937
4	7 94085	34909	92357	26636	51150	70246	85890	99142
5	8 13467	36255	93055	27107	51505	·70531	86129	99347
6	8 29303	37581	93747	27575	51859	70815	86366	99551
7	8 42692	38888	94434	28041	52211	71099	86603	99755
8	8 54291	40174	95115	28504	52562	71382	86840	99958
9	8 64521	41442	95791	28965	52912	71663	87075	2 00161
10	8 73673	42692	96462	29423	53260	71944	87310	00363
11	8 81951	43925	97127	29879	53606	72223	87545	00565
12	8 89509	45140	97788	30332	53952	72502	87779	00766
13	8 96461	46338	98443	30783	54296	72780	88012	00967
14	9 02898	47519	99094	31232	54639	73057	88244	01167
15	9 08891	48685	99740	31679	54980	73333	·88476	01367
16	9 14497	·49836	1 00381	32123	55320	73608	88708	01566
17	9 19763	·50971	01017	32566	55659	73883	88938	01765
18	9 24727	·52092	01649	33006	55996	74157	89168	01964
19	9 29423	·53198	02276	33443	56332	74429	·89398	02162
20	9 33879	·54291	02898	33878	56667	74701	89627	02360
21	9 38117	·55370	03517	34311	57000	74972	89855	02557
22	9 42157	56436	04131	34743	57332	75242	90083	02753
23	9 46018	57489	04740	35172	57663	75511	90310	02954
24	9 49715	58529	05345	35598	57993	75780	90536	03148
25	9 53261	59557	05946	36022	58321	76048	90762	03341
26	9 56667	60573	06543	36445	58648	76314	90987	03536
27	9 59945	61577	·07136	36866	58974	76580	91212	03730
28	9 63104	62570	07725	37285	59299	76846	91436	03924
29	9 66152	63551	·08310	·37702	59622	77110	91660	04118
30	9 69097	64521	·08891	·38116	59945	77373	91883	04311
31	9 71945	65481	09468	·38529	60266	77636	92105	04504
32	9 74703	66431	10042	38940	60586	77898	92327	04697
33	9 77376	67370	10611	39348	·60904	78160	92548	04888
34	9 79968	68299	11177	·39755	·61222	78420	92769	05080
35	9 82486	69218	11739	·40160	·61538	78680	92990	05271
36	9·84933	70127	12298	·40563	·61854	78938	93209	05462
37	9 87313	71027	12853	40964	·62168	79197	93428	05652
38	9 89629	71918	13404	41364	62481	79454	93646	05842
39	9 91886	72800	13952	·41761	·62793	79710	93864	06031
40	9 94085	73673	14497	42157	·63103	79967	94082	06220
41	9 96229	74537	15038	42551	·63413	80221	94299	06409
42	9 98323	75393	15576	42943	63722	80476	94515	06597
43	0 00366	76240	16110	43333	·64029	80729	94731	06785
44	0 02363	77080	16641	·43722	·64335	·80982	94946	·06972
45	0 04315	77911	17169	·44109	64641	81234	95161	07159
46	0 06224	·78734	17694	44494	64945	81486	95375	07346
47	0 08092	·79550	18216	44877	65248	81736	95589	07532
48	0 09921	·80358	18735	45259	65550	81986	95802	07718
49	0 11712	·81158	19250	45639	65851	82236	96014	07903
50	0 13467	81952	19762	46018	66151	82484	96226	08088
51	0 15187	82738	20271	46395	66450	82732	96438	08273
52	0 16875	·83517	20778	46770	66748	82979	96649	08457
53	0 18528	84288	21281	47143	67045	83225	96860	08641
54	0 20151	85053	·21782	·47515	67341	83471	97070	08824
55	0 21745	85813	22280	47886	67636	83716	97279	09007
56	0 23310	86564	22775	48255	67930	83960	97488	09190
57	0 24848	87310	·23267	·48622	68223	84204	97697	09372
58	0 26358	88049	·23756	·48988	68515	84447	97905	09554
59	0 27843	88782	·24243	49352	68806	84690	98112	09735
60	0 29303	0 89509	1·24727	1 49714	1 69096	1 84931	1 98320	2 09917

Table VI. Logarithms of m and n

$$m = \frac{2 \sin^2 \frac{1}{2} t}{\sin 1''}$$

log m

t	8^m	9^m	10^m	11^m	12^m	13^m	14^m	15^m
s 0	2 09917	2 20146	2 29296	2 37574	2 45130	2 52081	2 58516	2 64506
1	10098	20307	29441	37705	45250	52192	58619	64603
2	10278	20467	29586	37836	45371	52303	58722	64699
3	10458	20627	29730	37967	45491	52414	58825	64795
4	10637	20787	29874	38098	45611	52525	58928	64891
5	10817	20946	30017	38229	45731	52635	59031	64987
6	10995	21106	30161	38360	45850	52746	59134	65083
7	11174	21264	30304	38490	45970	52856	59236	65179
8	11352	21423	30447	38619	46089	52967	59339	65274
9	11530	·21581	30590	38749	46209	53077	59441	65370
10	11707	21739	30732	·38879	46328	53187	59543	65466
11	11884	21897	·30874	·39009	46446	53297	59645	65561
12	12061	22055	31016	·39138	46565	53406	59747	65656
13	12237	22212	31158	39267	46684	53516	·59849	65751
14	12413	22369	31300	39396	46802	53625	·59951	65846
15	12589	22525	31441	·39525	46920	53735	·60052	65941
16	12764	22682	31582	39654	47038	53844	·60154	66036
17	12939	22838	31723	39782	47156	53953	·60255	66131
18	13114	22994	31864	39910	47274	54062	·60357	66225
19	13288	23150	32004	40038	·47392	·54170	·60458	66320
20	13462	23304	32144	40166	·47509	54279	60559	66414
21	13635	23459	32284	40294	47626	54387	60660	66509
22	13809	23614	32424	40421	47743	·54496	60760	66603
23	13982	23768	32563	40548	47860	·54604	60861	66697
24	14154	23922	32703	40675	·47977	·54712	60961	·66791
25	14326	24076	32842	40802	48094	·54820	61062	·66885
26	14498	24230	32980	40929	48210	·54928	61162	66979
27	14670	24383	33019	41055	48327	55035	61263	67073
28	14841	24536	33258	41181	48443	55143	61363	67166
29	15011	24689	33396	41307	48559	55250	61463	67260
30	15182	24842	33534	41434	48675	55358	61563	67353
31	·15352	24994	33671	41560	48790	55465	61662	67446
32	15522	25146	33809	41685	48906	55572	61762	67539
33	15691	25297	33946	41811	49021	55679	61861	67633
34	15860	25449	34083	41936	49136	55785	61961	67726
35	16029	25600	34220	42061	49251	55892	62060	67818
36	16198	25751	34357	42186	49366	55999	62159	67911
37	16366	·25902	34493	42310	49481	56105	62258	68004
38	16534	26052	34630	42435	49596	56211	62357	68097
39	16701	26202	34766	42559	49711	56317	62456	68189
40	16868	·26352	34901	·42683	49825	56423	62555	68281
41	17035	26501	·35037	·42807	49939	56529	62654	68374
42	17202	26651	·35172	·42931	50053	56635	62752	68466
43	17368	26800	35307	·43055	50167	56740	62850	68558
44	17534	26949	35442	·43178	50281	56846	62949	68650
45	17700	27097	35577	43302	50394	56951	63047	68742
46	17865	27246	35712	·43425	50508	57056	63145	68834
47	18030	27394	35846	43548	·50621	57161	63243	68926
48	18194	27542	35980	43670	50734	57266	63341	69017
49	18359	27689	36114	43793	50847	·57371	63438	69109
50	18523	27836	36248	43915	·50960	·57476	63536	69201
51	18687	27984	36381	44037	51073	·57580	63634	69292
52	18850	28130	36515	44159	51185	·57685	63731	69383
53	19013	28277	36648	44281	51298	·57789	63828	69474
54	19176	28423	36781	44403	51410	·57893	63925	69565
55	19338	28569	36913	44525	51522	57997	64022	·69656
56	19500	28715	37046	44646	51634	58101	64119	·69747
57	19662	28861	37178	44767	51746	58205	64216	69838
58	19824	29006	37310	44888	51858	58309	64313	69929
59	19985	29151	37442	45009	51969	58412	64410	70019
60	2 20146	2 29296	2 37574	2 45130	2 52081	2 58516	2 64506	2 70109

Table VI. Logarithms of m and n.

$$m = \frac{2 \sin^2 \frac{1}{2} t}{\sin 1''}$$

log m

t	16^m	17^m	18^m	19^m	20^m	21^m	22^m	23^m
s								
0	2 70109	2 75373	2 80336	2 85029	2 89481	2 93717	2 97755	3 01613
1	70200	75458	80416	85105	89554	93786	97820	01675
2	70291	75543	80496	85181	·89626	93855	97886	01738
3	70381	75628	80576	85257	·89698	93923	97952	01801
4	70471	75713	80656	85333	89770	93992	98017	01864
5	70561	75798	80736	85409	89842	94061	98083	01926
6	70651	75883	80816	85485	89914	94129	98148	01989
7	70741	75967	80896	85561	89986	94198	98214	02052
8	70830	76052	80976	85636	90058	94266	98279	02114
9	70920	76136	81056	85712	90130	94335	98344	02177
10	71010	76220	81135	85787	90202	94403	98410	02239
11	·71099	76304	81215	85863	90274	94471	98475	02302
12	71188	76388	81295	85938	90346	94540	98540	02364
13	·71278	76472	81375	86014	90417	94608	98605	02426
14	·71367	76556	81454	86089	90489	94676	98670	02489
15	71456	76640	81533	86164	90560	94744	98735	02551
16	·71545	76724	81612	86239	90632	94812	98800	02613
17	71634	76808	81691	86314	90703	94880	98865	02675
18	71723	76892	81770	86389	90774	94948	98930	02737
19	·71811	76976	81849	86464	90845	95016	98995	02799
20	71900	77059	81928	86539	90917	95084	99060	02861
21	71989	77143	82007	86614	90988	95152	99125	02923
22	72077	77226	82086	86689	91058	95219	99189	02985
23	72165	77309	82165	86763	91129	95287	99254	03047
24	72254	77392	82244	86838	91200	95355	99319	03109
25	72342	77476	82322	86912	91271	95422	99383	03171
26	72430	·77559	82401	86987	91342	95490	99448	03232
27	72518	77642	82479	87061	91413	95557	99512	03294
28	72606	·77724	82558	87136	91484	95625	99576	03356
29	72694	77807	·82636	87210	91555	95692	99641	03417
30	72781	77890	82714	87284	91625	·95759	99705	03479
31	72869	77973	82792	87358	91696	·95827	99769	03540
32	72957	78056	82870	87432	91766	95894	99834	03602
33	73044	78138	82948	87506	91837	95961	99898	03663
34	73132	78220	83026	87580	91907	96028	99962	03725
35	73219	78302	·83104	·87654	91977	96095	3 00026	03787
36	73306	78385	·83182	·87728	92048	·96162	00090	03848
37	73393	78467	83260	·87802	92118	·96229	00154	03909
38	73480	78549	83337	87876	92188	96296	00218	03970
39	73567	78631	83414	·87949	92258	·96362	00282	04031
40	73654	78713	83492	88023	92328	96429	00346	04092
41	73741	78795	83570	88096	92398	96496	00409	04153
42	73827	78877	83648	88170	92468	96563	00473	04214
43	73914	78958	83725	88243	92538	·96630	00537	04275
44	74001	79040	83802	88317	92608	96696	00600	04336
45	74087	79121	83879	88390	92677	96763	00664	04397
46	·74173	79203	83957	88463	92747	96829	00728	04458
47	·74259	79284	84034	88536	92817	96896	00791	04519
48	·74346	79366	84111	88610	92886	96962	00855	04580
49	·74432	79447	84188	88683	92956	97028	00918	04641
50	·74518	79528	84264	88756	93026	97095	00981	04701
51	·74604	79609	84341	88828	93096	97161	01045	04762
52	74690	79690	84418	88901	93164	97227	01108	04823
53	74775	·79771	84495	·88974	93233	97293	01171	04883
54	74861	·79852	84571	89047	93303	97359	01234	·04944
55	·74947	79933	84648	89119	93372	97425	·01298	05004
56	75032	·80014	84724	89192	93441	97491	01361	·05065
57	75118	·80094	84801	89265	93510	97557	01424	·05125
58	75203	·80175	·84877	89337	93579	97623	01487	·05185
59	75288	·80255	·84953	89410	93648	97689	01550	05246
60	2 75373	2 80336	2 85029	2 89481	2 93717	2 97755	3 01613	3 05306

Table VI. Logarithms of m and n.

$$m = \frac{2 \sin^2 \frac{1}{2} t}{\sin 1''} \qquad n = \frac{2 \sin^4 \frac{1}{2} t}{\sin 1''}$$

log m

t (s)	24^m	25^m	26^m	27^m	28^m	29^m
0	3 05306	3 08848	3 12252	3 15526	3 18681	3 21725
1	05366	08906	12307	15580	18733	21775
2	05426	08964	12363	15633	18784	21825
3	05487	09022	12418	15686	18836	21875
4	05547	09079	12474	15740	18887	21924
5	05607	09137	12529	15793	18939	21974
6	05667	09195	12585	15847	18990	22024
7	05727	09252	12640	15900	19042	22073
8	05787	09310	12695	15953	19093	22123
9	05847	09367	12751	16007	19145	22172
10	05907	09425	12806	16060	19196	22222
11	05966	09482	12861	16113	19247	22272
12	06026	09540	12916	16166	19299	22321
13	06086	09597	12971	16210	19350	22371
14	06146	09655	13026	16373	19401	22420
15	06205	09712	13081	16326	19452	22470
16	06265	09769	13136	16379	19503	22519
17	06324	09826	13191	16432	19554	22568
18	06384	09883	13246	16485	19606	22618
19	06444	09941	13301	16538	19657	22667
20	06503	09998	13356	16591	19708	22716
21	06562	10055	13411	16643	19759	22766
22	06622	10112	13466	16696	19810	22815
23	06681	10169	13521	16749	19861	22864
24	06740	10226	13576	16802	19912	22913
25	06800	10283	13631	16855	19962	22963
26	06859	10340	13686	16907	20013	23012
27	06918	10396	13740	16960	20064	23061
28	06977	10453	13795	17013	20115	23110
29	07036	10510	13850	17066	20166	23159
30	07095	10567	13904	17118	20216	23208
31	07154	10623	13959	17170	20267	23257
32	07213	10680	14013	17223	20318	23306
33	07272	10737	14068	17275	20369	23355
34	07331	10793	14122	17327	20419	23404
35	07389	10850	14177	17380	20470	23453
36	07448	10906	14231	17433	20520	23501
37	07507	10963	14285	17485	20571	23550
38	07566	11019	14340	17538	20621	23599
39	07625	11076	14394	17590	20672	23648
40	07683	11132	14448	17642	20722	23697
41	07742	11188	14502	17694	20772	23745
42	07801	11245	14557	17746	20822	23794
43	07859	11301	14611	17799	20873	23843
44	07918	11357	14665	17851	20924	23891
45	07976	11413	14719	17903	20974	23940
46	08035	11469	14773	17955	21024	23988
47	08093	11525	14827	18007	21075	24037
48	08151	11582	14881	18059	21125	24086
49	08210	11638	14935	18111	21175	24134
50	08268	11694	14989	18163	21225	24182
51	08326	11750	15043	18215	21275	24231
52	08384	11805	15096	18267	21325	24279
53	08442	11861	15150	18319	21375	24328
54	08501	11917	15204	18371	21425	24376
55	08559	11973	15258	18422	21475	24424
56	08617	12029	15312	18474	21525	24473
57	08675	12085	15365	18526	21575	24521
58	08733	12140	15419	18578	21625	24569
59	08791	12196	15472	18629	21675	24617
60	3 08848	3 12252	3 15526	3 18681	3 21725	3 24665

t (m s)	log n	t (m s)	log n
0 0	—∞	20 0	0 1742
1 0	4 9706	10	0 1886
2 0	6 1747	20	0 2029
3 0	6 8791	30	0 2170
4 0	7 3788	40	0 2311
5 0	7 7665	50	0 2450
6 0	8 0832	21 0	0 2589
7 0	8 3509	10	0 2726
8 0	8 5829	20	0 2862
9 0	8 7875	30	0 2997
10 0	8 9705	40	0 3131
11 0	9 1360	50	0 3264
12 0	9 2871	22 0	0 3396
10	9 3111	10	0 3527
20	9 3347	20	0 3657
30	9 3580	30	0 3786
40	9 3810	40	0 3915
50	9 4037	50	0 4042
13 0	9 4262	23 0	0 4168
10	9 4483	10	0 4293
20	9 4701	20	0 4418
30	9 4917	30	0 4541
40	9 5130	40	0 4664
50	9 5341	50	0 4786
14 0	9 5549	24 0	0 4907
10	9 5754	10	0 5027
20	9 5957	20	0 5146
30	9 6158	30	0 5264
40	9 6356	40	0 5382
50	9 6553	50	0 5499
15 0	9 6747	25 0	0 5615
10	9 6939	10	0 5730
20	9 7128	20	0 5845
30	9 7316	30	0 5959
40	9 7502	40	0 6072
50	9 7686	50	0 6184
16 0	9 7867	26 0	0 6296
10	9 8047	10	0 6407
20	9 8225	20	0 6517
30	9 8402	30	0 6626
40	9 8576	40	0 6735
50	9 8749	50	0 6843
17 0	9 8920	27 0	0 6951
10	9 9089	10	0 7057
20	9 9257	20	0 7164
30	9 9423	30	0 7269
40	9 9588	40	0 7374
50	9 9751	50	0 7478
18 0	9 9913	28 0	0 7582
10	0 0072	10	0 7685
20	0 0231	20	0 7787
30	0 038[illegible]	30	0 7889
40	0 0544	40	0 7990
50	0 0698	50	0 8090
19 0	0 0851	29 0	0 8190
10	0 1003	10	0 8290
20	0 1153	20	0 8389
30	0 1302	30	0 8487
40	0 1450	40	0 8585
50	0 1597	50	0 8682
20 0	0 1742	30 0	0 8789

Table VII. Limits of Circum-meridian Altitudes.

A. *Limiting hour angle at which the second reduction amounts to one second*

Lat	Declination same sign as latitude									Declination different sign from latitude							
	80°	70°	60°	50°	40°	30°	20°	10°	0°	10°	20°	30°	40°	50°	60°	70°	80°
°	m	m	m	m	m	m	m	m	m	m	m	m	m	m	m	m	m
0	67	39	27	21	16	12	8	5	0	5	8	12	16	21	27	39	67
10	54	33	24	17	13	9	5	0	5	8	12	15	19	24	32	48	
20	48	29	20	14	10	5	0	5	8	12	15	18	23	29	40		
30	43	26	17	11	6	0	5	9	12	15	18	22	28	37			
40	38	22	13	7	0	6	10	13	16	19	23	28	36				
50	33	18	9	0	7	11	14	17	21	24	29	37					
60	28	12	0	9	13	17	20	24	27	32	40						
70	20	0	12	18	22	26	29	33	39	48							

B. *Limiting hour angle at which the third reduction amounts to one second*

Lat	Declination same sign as latitude									Declination different sign from latitude							
	80°	70°	60°	50°	40°	30°	20°	10°	0°	10°	20°	30°	40°	50°	60°	70°	80°
°	m	m	m	m	m	m	m	m	m	m	m	m	m	m	m	m	m
0	135	90	67	51	40	29	20	11	0	11	20	29	40	51	67	90	135
10	128	82	59	43	32	21	11	0	11	20	28	37	47	59	75	96	
20	118	73	51	35	23	12	0	11	20	28	37	46	56	67	82		
30	107	64	42	26	14	0	12	21	29	37	46	55	64	75			
40	95	54	32	16	0	14	23	32	40	47	56	64	73				
50	82	42	19	0	16	26	35	43	51	59	67	75					
60	67	27	0	19	32	42	51	59	67	75	82						
70	45	0	27	42	54	64	73	82	90	96							

The following approximate rules are sufficiently exact for practical purposes

A. The limit at which the second reduction amounts to 0″ 1 is ½ the hour angle of Table VII **A.**

The limit at which the second reduction amounts to 0″ 01 is ⅓ the hour angle of Table VII **A.**

B. The limit at which the third reduction amounts to 0″ 1 is ⅔ the hour angle of Table VII **B.**

The limit at which the third reduction amounts to 0″ 01 is ½ the hour angle of Table VII **B.**

TABLE VIII.

For reducing transits over several threads to a common instant.

	Arg Sidereal time		Proportional parts log k									Arg Mean time	
I	x	Log k	1^s	2^s	3^s	4^s	5^s	6^s	7^s	8^s	9^s	Log k	x
m s	s												s
0 0	0 00	0 000 0000	0	0	0	0	0	0	1	1	1	0 000 0000	0 00
10	0 00	0001	0	1	1	1	1	1	2	3	3	0001	0 00
20	0 00	0005	0	1	1	2	2	3	3	4	5	0005	0 00
30	0 00	0010	1	2	3	3	4	4	5	6	7	0010	0 00
40	0 00	0018	1	2	3	4	5	6	7	8	10	0018	0 00
50	0 00	0029	1	2	3	4	6	7	8	10	11	0029	0 00
1 0	0 00	0041	2	3	4	6	8	9	10	12	14	0042	0 00
10	0 00	0056	2	3	5	7	9	10	12	14	16	0057	0 00
20	0 01	0074	2	3	5	7	9	11	13	15	17	0074	0 01
30	0 01	0093	2	4	6	8	11	13	15	17	20	0094	0 01
40	0 01	0115	2	4	7	9	12	14	16	19	21	0115	0 01
50	0 02	0139	2	5	8	10	13	16	18	21	24	0139	0 02
2 0	0 02	0165	3	6	9	12	14	17	20	23	26	0166	0 02
10	0 03	0194	3	6	9	12	15	18	22	25	28	0195	0 03
20	0 04	0225	3	7	10	13	16	20	23	27	30	0226	0 04
30	0 04	0258	4	7	11	14	18	21	25	29	31	0260	0 04
40	0 05	0294	4	7	11	15	19	22	26	30	34	0296	0 05
50	0 06	0332	4	8	12	16	20	24	28	32	36	0334	0 06
3 0	0 08	0372	4	8	13	17	21	25	30	34	38	0374	0 08
10	0 09	0415	4	8	13	17	22	26	31	35	40	0417	0 09
20	0 11	0459	5	9	14	19	24	28	33	38	43	0462	0 11
30	0 12	0506	5	10	15	20	25	30	35	40	45	0509	0 12
40	0 14	0556	5	10	15	21	26	32	37	42	47	0559	0 14
50	0 16	0607	6	11	16	22	27	33	38	43	49	0611	0 16
4 0	0 18	0661	6	11	17	23	28	34	39	45	51	0665	0 18
10	0 21	0718	6	11	17	23	29	35	41	47	53	0722	0 21
20	0 23	0776	6	12	18	24	30	37	43	49	55	0781	0 23
30	0 26	0837	6	13	19	25	32	38	44	50	57	0842	0 26
40	0 29	0900	7	13	20	26	33	39	46	52	59	0905	0 29
50	0 32	0966	7	13	20	27	33	40	47	54	61	0971	0 32
5 0	0 36	1034	7	13	20	27	34	41	48	55	63	1039	0 36
10	0 40	1104	7	14	21	28	35	43	50	57	64	1110	0 40
20	0 44	1176	7	14	22	29	37	44	52	59	67	1183	0 44
30	0 48	1250	8	15	23	31	39	46	54	62	70	1258	0 48
40	0 52	1327	8	16	24	32	40	48	56	64	72	1335	0 52
50	0 57	1407	8	16	24	32	41	49	57	65	73	1414	0 57
6 0	0 62	1488	9	17	25	33	42	50	59	67	76	1496	0 62
10	0 67	1572	9	17	26	34	43	51	60	69	78	1581	0 67
20	0 73	1658	9	18	26	35	44	53	62	71	80	1667	0 73
30	0 79	1747	9	18	27	36	45	54	63	72	82	1756	0 79
40	0 85	1837	9	19	28	37	46	56	65	74	84	1847	0 85
50	0 91	1930	10	19	29	38	48	57	67	76	86	1941	0 91
7 0	0 98	2026	10	19	29	39	49	58	68	78	87	2037	0 98
10	1 05	2123	10	20	30	40	50	60	70	80	90	2135	1 06
20	1 12	2223	10	20	30	41	51	61	71	82	92	2235	1 13
30	1 20	2325	11	21	31	42	52	63	73	84	94	2338	1 21
40	1 28	2430	11	21	32	42	53	64	74	85	96	2443	1 29
50	1 37	2537	11	21	32	43	54	65	76	87	98	2550	1 38
8 0	1 46	2646	11	22	33	44	55	66	77	88	100	2660	1 47

TABLE VIII.

For reducing transits over several threads to a common instant

	Arg Sidereal time.		Proportional parts of log k.									Arg Mean time	
I	x	Log k	1s	2s	3s	4s	5s	6s	7s	8s	9s	Log k	x
m s	s												s
8 0	1 46	0 000 2646	11	22	33	44	55	66	77	88	100	0 000 2660	1 47
10	1 55	2757	11	23	34	45	56	68	79	90	102	2772	1 57
20	1 65	2871	11	23	34	46	57	69	81	92	104	2886	1 67
30	1 75	2987	12	23	35	47	58	70	82	94	106	3003	1 77
40	1 86	3105	12	24	36	48	60	72	84	96	108	3122	1 88
50	1 97	3225	12	25	37	49	62	74	86	98	110	3243	1 99
9 0	2 08	3348	13	25	37	50	63	75	88	100	112	3367	2 10
10	2 20	3473	13	26	38	51	64	76	89	102	114	3492	2 22
20	2 32	3601	13	26	38	51	64	77	90	103	116	3621	2 34
30	2 45	3731	13	26	39	52	65	78	92	105	118	3751	2 47
40	2 58	3863	13	26	40	53	66	79	93	107	120	3884	2 60
50	2 72	3997	14	27	41	54	68	82	95	109	122	4019	2 74
10 0	2 86	4134	14	27	41	55	69	83	96	110	124	4156	2 88
10	3 00	4272	14	28	42	56	70	84	98	112	127	4296	3 03
20	3 15	4414	14	28	43	57	71	85	100	114	129	4438	3 17
30	3 30	4557	15	29	44	58	73	87	102	117	131	4582	3 32
40	3 46	4703	15	29	44	59	74	88	103	118	133	4729	3 49
50	3 63	4851	15	30	45	60	75	90	105	120	135	4878	3 66
11 0	3 80	5001	15	31	46	61	76	92	107	122	137	5029	3 83
10	3 98	5154	15	31	46	62	77	93	108	124	139	5182	4 01
20	4 16	5309	16	31	47	63	78	94	110	126	141	5338	4 19
30	4 34	5466	16	32	48	64	80	96	112	128	143	5496	4 38
40	4 53	5626	16	32	49	64	81	97	113	129	145	5657	4 57
50	4 73	5788	16	32	49	65	82	98	114	131	147	5819	4 77
12 0	4 93	5952	16	33	50	66	83	99	116	133	150	5985	4 97
10	5 14	6118	17	34	51	67	84	101	118	135	152	6152	5 18
20	5 36	6287	17	34	51	68	85	102	120	137	154	6322	5 40
30	5 58	6458	17	34	52	69	86	104	121	138	156	6493	5 62
40	5 80	6631	18	35	53	70	88	105	123	141	158	6668	5 85
50	6 04	6807	18	35	53	71	89	106	124	142	160	6844	6 08

TABLE VIII. A.

For correcting the mean log k found from the preceding table.

Mean log k	Correction
0 0001	0 0000000,1
2	0,3
3	0,8
4	1,4
5	2,2
6	3,3
7	4,3

TABLE IX. Probability of Errors.

(Method of Least Squares)

$$\Theta(t) = \frac{2}{\sqrt{\pi}} \int_0^t e^{-t^2}\, dt$$

t	$\Theta(t)$	Diff	t	$\Theta(t)$	Diff	t	$\Theta(t)$	Diff	t	$\Theta(t)$	Diff
0.00	0 00000	1128	0.50	0 52050	874	1.00	0 84270	411	1.50	0 96611	117
0.01	01128	1128	0.51	52924	866	1.01	84681	403	1.51	96728	113
0.02	02256	1128	0.52	53790	856	1.02	85084	394	1.52	96841	111
0.03	03384	1127	0.53	54646	848	1.03	85478	387	1.53	96952	107
0.04	04511	1126	0.54	55494	838	1.04	85865	379	1.54	97059	103
0.05	0 05637	1125	0 55	0 56332	830	1.05	0 86244	370	1.55	0 97162	101
0.06	06762	1124	0.56	57162	820	1.06	86614	363	1.56	97263	97
0.07	07886	1122	0.57	57982	810	1.07	86977	356	1.57	97360	95
0.08	09008	1120	0.58	58792	802	1.08	87333	347	1.58	·97455	91
0.09	10128	1118	0.59	59594	792	1.09	87680	341	1.59	·97546	89
0.10	0 11246	1116	0.60	0 60386	782	1.10	0 88021	332	1.60	0 97635	86
0.11	12362	1114	0.61	61168	773	1.11	88353	326	1.61	97721	83
0.12	13476	1111	0.62	61941	764	1.12	88679	318	1.62	97804	80
0.13	14587	1108	0.63	62705	754	1.13	88997	311	1.63	97884	78
0.14	15695	1105	0.64	63459	744	1.14	89308	304	1.64	97962	76
0.15	0 16800	1101	0.65	0 64203	735	1.15	0 89612	298	1.65	0 98038	72
0.16	17901	1098	0.66	64938	725	1.16	89910	290	1.66	98110	71
0.17	18999	1095	0.67	65663	715	1.17	90200	284	1.67	98181	68
0.18	20094	1090	0.68	66378	706	1.18	90484	277	1.68	98249	66
0.19	21184	1086	0.69	67084	696	1.19	90761	270	1.69	98315	64
0.20	0 22270	1082	0.70	0 67780	687	1.20	0 91031	265	1.70	0 98379	62
0.21	23352	1078	0.71	68467	676	1.21	91296	257	1.71	98441	59
0.22	24430	1072	0.72	69143	667	1.22	91553	252	1.72	98500	58
0.23	25502	1068	0.73	69810	658	1.23	91805	246	1.73	98558	55
0.24	26570	1063	0.74	70468	648	1.24	92051	239	1.74	98613	54
0.25	0 27633	1057	0.75	0 71116	638	1.25	0 92290	234	1.75	0 98667	52
0.26	28690	1052	0.76	71754	628	1.26	92524	227	1.76	98719	50
0.27	29742	1046	0.77	72382	619	1.27	92751	222	1.77	98769	48
0.28	30788	1040	0.78	73001	609	1.28	92973	217	1.78	98817	47
0.29	31828	1035	0.79	73610	600	1.29	93190	211	1.79	98864	45
0.30	0 32863	1028	0.80	0 74210	590	1.30	0 93401	205	1.80	0 98909	43
0.31	33891	1022	0.81	74800	581	1.31	93606	201	1.81	98952	42
0.32	34913	1015	0.82	75381	571	1.32	93807	195	1.82	98994	41
0.33	35928	1008	0.83	75952	562	1.33	94002	189	1.83	99035	39
0.34	36936	1002	0.84	76514	553	1.34	94191	185	1.84	99074	37
0.35	0 37938	995	0.85	0 77067	543	1.35	0 94376	180	1.85	0 99111	36
0.36	38933	988	0.86	77610	534	1.36	94556	175	1.86	99147	35
0.37	39921	980	0.87	78144	525	1.37	94731	171	1.87	99182	34
0.38	40901	973	0.88	78669	515	1.38	94902	165	1.88	99216	32
0.39	41874	965	0.89	79184	507	1.39	95067	162	1.89	99248	31
0.40	0 42839	958	0.90	0 79691	497	1.40	0 95229	156	1.90	0 99279	30
0.41	43797	950	0.91	80188	489	1.41	95385	153	1.91	99309	29
0.42	44747	942	0.92	80677	479	1.42	95538	148	1.92	99338	28
0.43	45689	934	0.93	81156	471	1.43	95686	144	1.93	99366	26
0.44	46623	925	0.94	81627	462	1.44	95830	140	1.94	99392	26
0.45	0 47548	918	0.95	0 82089	453	1.45	0 95970	135	1.95	0 99418	25
0.46	48466	909	0.96	82542	445	1.46	96105	132	1.96	99443	23
0.47	49375	900	0.97	82987	436	1.47	96237	128	1.97	99466	23
0.48	50275	892	0.98	83423	428	1.48	96365	125	1.98	99489	22
0.49	51167	883	0.99	83851	419	1.49	96490	121	1.99	99511	21
0.50	0 52050		1.00	0 84270		1.50	0 96611		2.00	0 99532	

TABLE IX.A. Probability of Errors.

(Method of Least Squares)

$$\Theta(\rho t') = \frac{2}{\sqrt{\pi}} \int_0^{\rho t'} e^{-t^2}\, dt \qquad t' = \frac{x}{r}$$

t'	$\Theta(\rho t')$	Diff	t'	$\Theta(\rho t')$	Diff	t'	$\Theta(\rho t')$	Diff	t'	$\Theta(\rho t')$	Diff
0.00	0 00000	538	0.50	0 26407	508	1.00	0 50000	428	1.50	0 68833	322
0.01	00538	538	0.51	26915	506	1.01	50428	425	1.51	69155	319
0.02	01076	538	0.52	27421	506	1.02	50853	424	1.52	69474	317
0.03	01614	538	0.53	27927	504	1.03	51277	422	1.53	69791	315
0.04	02152	538	0.54	28431	503	1.04	51699	420	1.54	70106	313
0.05	0 02690	538	0.55	0 28934	502	1.05	0 52119	418	1.55	0 70419	310
0.06	03228	538	0.56	29436	500	1.06	52537	415	1.56	70729	309
0.07	03766	537	0.57	29936	499	1.07	52952	414	1.57	71038	306
0.08	04303	537	0.58	30435	498	1.08	53366	412	1.58	71344	304
0.09	04840	538	0.59	30933	497	1.09	53778	410	1.59	71648	301
0.10	0 05378	536	0.60	0 31430	495	1.10	0 54188	407	1.60	0 71949	300
0.11	05914	537	0.61	31925	494	1.11	54595	406	1.61	72249	297
0.12	06451	536	0.62	32419	492	1.12	55001	403	1.62	72546	295
0.13	06987	536	0.63	32911	491	1.13	55404	402	1.63	72841	293
0.14	07523	536	0.64	33402	490	1.14	55806	399	1.64	73134	291
0.15	0 08059	535	0.65	0 33892	488	1.15	0 56205	397	1.65	0 73425	289
0.16	08594	535	0.66	34380	486	1.16	56602	396	1.66	73714	286
0.17	09129	534	0.67	34866	486	1.17	56998	393	1.67	74000	285
0.18	09663	534	0.68	35352	483	1.18	57391	391	1.68	74285	282
0.19	10197	534	0.69	35835	482	1.19	57782	389	1.69	74567	280
0.20	0 10731	533	0.70	0 36317	481	1.20	0 58171	387	1.70	0 74847	277
0.21	11264	532	0.71	36798	479	1.21	58558	384	1.71	75124	276
0.22	11796	532	0.72	37277	478	1.22	58942	383	1.72	75400	274
0.23	12328	532	0.73	37755	476	1.23	59325	380	1.73	75674	271
0.24	12860	531	0.74	38231	474	1.24	59705	378	1.74	75945	269
0.25	0 13391	530	0.75	0 38705	473	1.25	0 60083	376	1.75	0 76214	267
0.26	13921	530	0.76	39178	471	1.26	60459	374	1 76	76481	265
0.27	14451	529	0.77	39649	469	1.27	60833	372	1.77	76746	263
0.28	14980	528	0.78	40118	468	1.28	61205	370	1.78	77009	261
0.29	15508	527	0.79	40586	466	1.29	61575	367	1.79	77270	258
0.30	0 16035	527	0.80	0 41052	465	1.30	0 61942	366	1.80	0 77528	257
0.31	16562	526	0.81	41517	462	1.31	62308	363	1.81	77785	254
0.32	17088	526	0.82	41979	461	1.32	62671	361	1.82	78039	252
0.33	17614	524	0.83	42440	459	1.33	63032	359	1.83	78291	251
0.34	18138	524	0.84	42899	458	1.34	63391	356	1.84	78542	248
0.35	0 18662	523	0.85	0 43357	456	1.35	0 63747	355	1.85	0 78790	246
0.36	19185	522	0.86	43813	454	1.36	64102	352	1.86	79036	244
0.37	19707	522	0.87	44267	452	1.37	64454	350	1.87	79280	242
0.38	20229	520	0.88	44719	450	1.38	64804	348	1.88	79522	239
0.39	20749	519	0.89	45169	449	1.39	65152	346	1.89	79761	238
0.40	0 21268	519	0.90	0 45618	446	1.40	0 65498	343	1.90	0 79999	236
0.41	21787	517	0.91	46064	445	1.41	65841	341	1.91	80235	234
0.42	22304	517	0.92	46509	443	1.42	66182	339	1.92	80469	231
0.43	22821	515	0.93	46952	441	1.43	66521	337	1.93	80700	230
0.44	23336	515	0.94	47393	439	1.44	66858	335	1.94	80930	228
0.45	0 23851	513	0.95	0 47832	438	1.45	0 67193	333	1.95	0 81158	225
0.46	24364	512	0.96	48270	435	1.46	67526	330	1.96	81383	224
0.47	24876	512	0.97	48705	434	1.47	67856	328	1.97	81607	221
0.48	25388	510	0.98	49139	431	1.48	68184	326	1.98	81828	220
0.49	25898	509	0.99	49570	430	1.49	68510	323	1.99	82048	218
0.50	0 26407		1.00	0 50000		1.50	0 68833		2.00	0 82266	

TABLE IX.A. Probability of Errors.

(Method of Least Squares)

$$\Theta(\rho t') = \frac{2}{\sqrt{\pi}} \int_0^{\rho t'} e^{-tt}\, dt \qquad t' = \frac{a}{r}$$

t'	$\Theta(\rho t')$	Diff	t'	$\Theta(\rho t')$	Diff	t'	$\Theta(\rho t')$	Diff	t'	$\Theta(\rho t')$	Diff
2.00	0 82266	215	2.50	0 90825	129	3.00	0 95698	69	3.50	0 98176	306
2.01	82481	214	2.51	90954	128	3.01	95767	68	3.60	98482	261
2.02	82695	212	2.52	91082	126	3.02	95835	67	3.70	98743	219
2.03	82907	210	2.53	91208	124	3.03	95902	66	3.80	98962	185
2.04	83117	207	2.54	91332	124	3.04	95968	65	3.90	99147	155
2.05	0 83324	206	2.55	0 91456	122	3.05	0 96033	65	4.00	0 99302	129
2.06	83530	204	2.56	91578	120	3.06	96098	63	4.10	99431	108
2.07	83734	202	2.57	91698	119	3.07	96161	63	4.20	99539	88
2.08	83936	201	2.58	91817	118	3.08	96224	62	4.30	99627	73
2.09	84137	198	2.59	91935	116	3.09	96286	60	4.40	99700	60
2.10	0 84335	196	2.60	0 92051	115	3.10	0 96346	60	4.50	0 99760	48
2.11	84531	195	2.61	92166	114	3.11	96406	60	4.60	99808	40
2.12	84726	193	2.62	92280	112	3.12	96466	58	4.70	99848	31
2.13	84919	190	2.63	92392	111	3.13	96524	58	4.80	99879	26
2.14	85109	189	2.64	92503	110	3.14	96582	56	4.90	99905	21
2.15	0 85298	188	2.65	0 92613	108	3.15	0 96638	56	5.00	0 99926	
2.16	85486	185	2.66	92721	107	3.16	96694	55	∞	1 00000	
2.17	85671	183	2.67	92828	106	3.17	96749	55			
2.18	85854	182	2.68	92934	104	3.18	96804	53			
2.19	86036	180	2.69	93038	103	3.19	96857	53			
2.20	0 86216	178	2.70	0 93141	102	3.20	0 96910	52			
2.21	86394	176	2.71	93243	101	3.21	96962	51			
2.22	86570	175	2.72	93344	99	3.22	97013	51			
2.23	86745	172	2.73	93443	98	3.23	97064	50			
2.24	86917	171	2.74	93541	97	3.24	97114	49			
2.25	0 87088	170	2.75	0 93638	96	3.25	0 97163	48			
2.26	87258	167	2.76	93734	94	3.26	97211	48			
2.27	87425	166	2.77	93828	94	3.27	97259	47			
2.28	87591	164	2.78	93922	92	3.28	97306	46			
2.29	87755	163	2.79	94014	91	3.29	97352	45			
2.30	0 87918	160	2.80	0 94105	90	3.30	0 97397	45			
2.31	88078	159	2.81	94195	89	3.31	97442	44			
2.32	88237	158	2.82	94284	87	3.32	97486	44			
2.33	88395	155	2.83	94371	87	3.33	97530	43			
2.34	88550	155	2.84	94458	85	3.34	97573	42			
2.35	0 88705	152	2.85	0 94543	84	3.35	0 97615	42			
2.36	88857	151	2.86	94627	84	3.36	97657	41			
2.37	89008	149	2.87	94711	82	3.37	97698	40			
2.38	89157	147	2.88	94793	81	3.38	97738	40			
2.39	89304	146	2.89	94874	80	3.39	97778	39			
2.40	0 89450	145	2.90	0 94954	79	3.40	0 97817	38			
2.41	89595	143	2.91	95033	78	3.41	97855	38			
2.42	89738	141	2.92	95111	76	3.42	97893	37			
2.43	89879	140	2.93	95187	76	3.43	97930	37			
2.44	90019	138	2.94	95263	75	3.44	97967	36			
2.45	0 90157	136	2.95	0 95338	74	3.45	0 98003	36			
2.46	90293	135	2.96	95412	73	3.46	98039	35			
2.47	90428	134	2.97	95485	72	3.47	98074	35			
2.48	90562	132	2.98	95557	71	3.48	98109	34			
2.49	90694	131	2.99	95628	70	3.49	98143	33			
2.50	0 90825		3.00	0 95698		3.50	0 98176				

TABLE X. Peirce's Criterion.

Values of x^2 for $\mu=1$

m	n = 1	2	3	4	5	6	7	8
3	1 480							
4	1 912	1 163						
5	2 278	1 439						
6	2 592	1 687	1 208					
7	2 866	1 910	1 409	1 045				
8	3 109	2 112	1 589	1 229				
9	3 327	2 295	1 753	1 388	1 091			
10	3 526	2 464	1 904	1 531	1 242			
11	3 707	2 621	2 045	1 662	1 373	1 122		
12	3 875	2 766	2 176	1 785	1 492	1 249	1 018	
13	4 029	2 902	2 299	1 901	1 604	1 362	1 145	
14	4 173	3 030	2 416	2 009	1 709	1 465	1 255	1 053
15	4 309	3 151	2 526	2 111	1 807	1 561	1 354	1 163
16	4 436	3 264	2 630	2 207	1 898	1 651	1 445	1 259
17	4 555	3 371	2 729	2 300	1 985	1 736	1 529	1 347
18	4 668	3 475	2 824	2 389	2 069	1 817	1 609	1 428
19	4 776	3 571	2 914	2 474	2 150	1 895	1 685	1 504
20	4 878	3 664	3 001	2 556	2 227	1 970	1 757	1 57
21	4 975	3 755	3 084	2 634	2 301	2 041	1 827	1 64
22	5 068	3 840	3 164	2 709	2 373	2 109	1 893	1 71
23	5 157	3 923	3 240	2 782	2 442	2 176	1 957	1 77
24	5 242	4 002	3 315	2 852	2 509	2 240	2 019	1 83
25	5 324	4 078	3 387	2 920	2 573	2 302	2 079	1 89
26	5 403	4 151	3 456	2 986	2 636	2 362	2 137	1 94
27	5 479	4 222	3 523	3 049	2 697	2 420	2 194	2 00
28	5 552	4 291	3 588	3 111	2 756	2 477	2 249	2 05
29	5 622	4 358	3 651	3 171	2 813	2 532	2 302	2 10
30	5 690	4 422	3 712	3 229	2 869	2 586	2 354	2 15
31	5 756	4 484	3 772	3 285	2 923	2 638	2 404	2 20
32	5 820	4 545	3 829	3 340	2 976	2 689	2 454	2 25
33	5 882	4 604	3 884	3 394	3 028	2 738	2 502	2 30
34	5 942	4 661	3 939	3 446	3 078	2 787	2 549	2 34
35	6 001	4 717	3 992	3 497	3 127	2 834	2 594	2 3
36	6 058	4 771	4 044	3 547	3 174	2 880	2 639	2 4
37	6 113	4 823	4 095	3 595	3 221	2 926	2 683	2 4
38	6 167	4 874	4 144	3 643	3 267	2 970	2 726	2 5
39	6 219	4 925	4 192	3 689	3 312	3 013	2 768	2 5
40	6 270	4 974	4 239	3 734	3 356	3 055	2 809	2 6
41	6 320	5 022	4 285	3 779	3 398	3 097	2 849	2 6
42	6 369	5 069	4 331	3 822	3 440	3 138	2 888	2 6
43	6 416	5 114	4 375	3 865	3 481	3 178	2 927	2 7
44	6 463	5 159	4 418	3 906	3 521	3 217	2 965	2 7
45	6 508	5 202	4 460	3 947	3 561	3 255	3 002	2 7
46	6 552	5 245	4 501	3 987	3 600	3 293	3 039	2 8
47	6 596	5 287	4 542	4 026	3 638	3 330	3 075	2 8
48	6 639	5 328	4 581	4 065	3 675	3 366	3 110	2 8
49	6 681	5 368	4 620	4 103	3 712	3 401	3 145	2 9
50	6 720	5 408	4 657	4 140	3 748	3 436	3 179	2 9
51	6 761	5 447	4 695	4 176	3 784	3 471	3 213	2 9
52	6 800	5 484	4 732	4 212	3 819	3 505	3 246	3 0
53	6 838	5 522	4 768	4 247	3 853	3 538	3 279	3 0
54	6 876	5 559	4 804	4 282	3 887	3 571	3 311	3
55	6 913	5 595	4 839	4 316	3 920	3 603	3 342	3
56	6 950	5 630	4 873	4 349	3 952	3 635	3 373	3
57	6 986	5 665	4 907	4 382	3 984	3 666	3 404	3
58	7 021	5 699	4 941	4 415	4 016	3 697	3 434	3
59	7 056	5 733	4 974	4 447	4 047	3 728	3 463	3
60	7 090	5 766	5 006	4 478	4 078	3 758	3 492	3

TABLE X. Peirce's Criterion.

Values of x^2 for $\mu = 2$

m	n = 1	2	3	4	5	6	7	8	9
4	1 484								
5	1 887	1 235							
6	2 230	1 479	1 114						
7	2 528	1 705	1 288	1 025					
8	2 793	1 913	1 459	1 163					
9	3 029	2 102	1 620	1 304	1 066				
10	3 242	2 277	1 771	1 439	1 191				
11	3 437	2 440	1 913	1 566	1 310	1 098			
12	3 616	2 592	2 046	1 687	1 423	1 208	1 015		
13	3 782	2 734	2 171	1 802	1 529	1 310	1 122		
14	3 936	2 867	2 290	1 910	1 631	1 409	1 220	1 045	
15	4 080	2 991	2 403	2 014	1 727	1 501	1 312	1 141	
16	4 215	3 109	2 510	2 112	1 819	1 589	1 398	1 229	1 070
17	4 342	3 221	2 611	2 206	1 907	1 673	1 480	1 311	1 157
18	4 462	3 328	2 708	2 295	1 991	1 753	1 557	1 388	1 236
19	4 576	3 429	2 801	2 382	2 072	1 830	1 631	1 461	1 310
20	4 684	3 526	2 890	2 465	2 150	1 904	1 703	1 531	1 380
21	4 787	3 619	2 975	2 544	2 225	1 976	1 772	1 598	1 447
22	4 885	3 707	3 057	2 621	2 298	2 045	1 838	1 663	1 511
23	4 979	3 792	3 136	2 695	2 368	2 112	1 902	1 725	1 572
24	5 069	3 874	3 212	2 766	2 435	2 176	1 964	1 785	1 631
25	5 155	3 953	3 286	2 835	2 501	2 239	2 024	1 843	1 688
26	5 238	4.029	3 357	2 902	2 565	2 299	2 082	1 900	1 743
27	5 317	4 103	3 426	2 967	2 626	2 358	2 139	1 955	1 796
28	5 394	4 174	3 492	3 030	2 686	2 415	2 194	2 008	1 848
29	5 468	4 242	3 556	3 091	2 744	2 471	2 248	2 060	1 898
30	5 539	4 309	3 619	3 150	2 801	2 525	2 300	2 111	1 948
31	5 608	4 373	3 680	3 208	2 856	2 578	2 351	2 160	1 996
32	5 675	4 435	3 739	3 264	2 909	2 630	2 401	2 208	2 042
33	5 740	4 496	3 796	3 319	2 961	2 680	2 449	2 255	2 088
34	5 803	4 555	3 852	3 372	3 012	2 729	2 496	2 301	2 132
35	5 864	4 613	3 906	3 424	3 062	2 777	2 543	2 345	2 176
36	5 924	4 669	3 959	3 474	3 111	2 824	2 588	2 389	2 219
37	5 981	4 723	4 011	3 523	3 158	2 870	2 632	2 432	2 260
38	6 037	4 776	4 061	3 572	3 205	2 914	2 675	2 474	2 301
39	6 092	4 827	4 111	3 619	3 250	2 958	2 717	2 515	2 341
40	6 145	4 878	4 159	3 665	3 294	3 001	2 759	2 555	2 380
41	6 197	4 927	4 206	3 710	3 338	3 043	2 800	2 595	2 419
42	6 247	4 975	4 252	3 755	3 381	3 084	2 840	2 634	2 457
43	6 297	5 022	4 297	3 798	3 422	3 124	2 879	2 672	2 494
44	6 345	5 068	4 341	3 840	3 463	3 164	2 917	2 709	2 530
45	6 392	5 113	4 384	3 882	3 503	3 203	2 955	2 746	2 566
46	6 438	5 157	4 426	3 923	3 543	3 241	2 992	2 782	2 601
47	6 483	5 200	4 468	3 963	3 581	3 278	3 029	2 817	2 635
48	6 527	5 242	4 508	4 002	3 619	3 315	3 064	2 852	2 669
49	6 570	5 283	4 548	4 040	3 656	3 351	3 099	2 886	2 703
50	6 612	5 323	4 587	4 078	3 693	3 386	3 134	2 920	2 736
51	6 653	5 362	4 626	4 115	3 728	3 421	3 168	2 953	2 768
52	6 694	5 401	4 663	4 151	3 764	3 456	3 201	2 986	2 800
53	6 734	5 440	4 700	4 187	3 798	3 489	3 234	3 018	2 831
54	6 773	5 478	4 736	4 222	3 833	3 523	3 266	3 049	2 862
55	6 811	5 515	4 772	4 257	3 867	3 555	3 298	3 080	2 892
56	6 848	5 551	4 807	4 291	3 900	3 588	3 329	3 111	2 922
57	6 885	5 587	4 842	4 325	3 932	3 619	3 360	3 141	2 951
58	6 921	5 622	4 876	4 357	3 964	3 650	3 390	3 171	2 980
59	6 957	5 656	4 909	4 390	3 996	3 681	3 419	3 200	3 009
60	6 993	5 690	4 942	4 421	4 027	3 711	3 448	3 229	3 037

TABLE X. A. Peirce's Criterion.

Log T

m	n = 1	2	3	4	5	6	7	8	9
2	9 3979								
3	9 1707	9 5853							
4	9 0231	9 3979	9 6744						
5	8 9134	9 2693	9 5129	9 7283					
6	8 8259	9 1707	9 3979	9 5853	9 7652				
7	8 7532	9 0906	9 3080	9 4810	9 6362	9 7922			
8	8 6910	9 0231	9 2338	9 3979	9 5403	9 6744	9 8130		
9	8 6365	8 9648	9 1707	9 3287	9 4630	9 5853	9 7042	9 8296	
10	8 5882	8 9134	9 1157	9 2693	9 3979	9 5129	9 6210	9 7253	9 8431
11	8 5447	8 8675	9 0669	9 2172	9 3417	9 4514	9 5527	9 6501	9 7483
12	8 5051	8 8259	9 0231	9 1707	9 2921	9 3979	9 4943	9 5853	9 6744
13	8 4689	8 7881	8 9834	9 1288	9 2477	9 3506	9 4433	9 5298	9 6128
14	8 4355	8 7532	8 9470	9 0906	9 2074	9 3080	9 3979	9 4810	9 5597
15	8 4044	8 7210	8 9134	9 0555	9 1707	9 2693	9 3570	9 4374	9 5129
16	8 3754	8 6910	8 8822	9 0231	9 1368	9 2338	9 3197	9 3979	9 4710
17	8 3483	8 6629	8 8532	8 9930	9 1055	9 2011	9 2854	9 3619	9 4328
18	8 3227	8 6365	8 8259	8 9648	9 0762	9 1707	9 2537	9 3287	9 3979
19	8 2986	8 6117	8 8003	8 9383	9 0489	9 1423	9 2242	9 2980	9 3658
20	8 2757	8 5882	8 7761	8 9134	9 0231	9 1157	9 1966	9 2693	9 3359
21	8 2540	8 5659	8 7532	8 8898	8 9988	9 0906	9 1707	9 2424	9 3080
22	8 2333	8 5447	8 7315	8 8675	8 9758	9 0669	9 1463	9 2172	9 2818
23	8 2136	8 5245	8 7107	8 8462	8 9540	9 0445	9 1231	9 1933	9 2571
24	8 1947	8 5051	8 6910	8 8259	8 9332	9 0231	9 1012	9 1707	9 2338
25	8 1766	8 4867	8 6721	8 8066	8 9134	9 0028	9 0803	9.1492	9 2117
26	8 1592	8 4689	8 6539	8 7881	8 8944	8 9834	9 0604	9 1288	9 1907
27	8 1425	8 4519	8 6365	8 7703	8 8763	8 9648	9 0414	9 1093	9 1707
28	8 1264	8 4354	8 6198	8 7532	8 8588	8 9470	9 0231	9 0906	9 1516
29	8 1109	8 4197	8 6037	8 7368	8 8421	8 9299	9 0056	9 0727	9 1332
30	8 0959	8 4044	8 5882	8 7210	8 8259	8 9134	8 9888	9 0555	9 1157
31	8 0814	8 3897	8 5732	8 7057	8 8104	8 8975	8 9726	9 0390	9 0988
32	8 0674	8 3754	8 5587	8 6910	8 7954	8 8822	8 9571	9 0231	9 0826
33	8 0538	8 3617	8 5447	8 6767	8 7809	8 8675	8 9420	9 0078	9 0669
34	8 0407	8 3483	8 5311	8 6629	8 7668	8 8532	8 9275	8 9930	9 0518
35	8 0279	8 3353	8 5179	8 6495	8 7532	8 8393	8.9134	8 9786	9 0372
36	8 0155	8 3227	8 5051	8 6365	8 7400	8 8259	8 8998	8 9648	9 0231
37	8 0034	8 3105	8 4927	8 6239	8 7272	8 8129	8 8865	8 9513	9 0095
38	7 9917	8 2986	8 4807	8 6117	8 7148	8 8003	8 8737	8 9383	8 9962
39	7 9803	8 2870	8 4689	8 5998	8 7027	8 7881	8 8613	8 9257	8 9834
40	7 9691	8 2757	8 4575	8 5882	8 6910	8 7761	8 8492	8 9134	8 9709
41	7 9583	8 2647	8 4463	8 5769	8 6795	8 7645	8 8374	8 9014	8 9588
42	7 9477	8 2540	8 4355	8 5659	8 6684	8 7532	8 8259	8 8898	8 9470
43	7 9373	8 2435	8 4249	8 5552	8 6575	8 7422	8 8148	8 8785	8 9355
44	7 9272	8 2333	8 4145	8 5447	8 6469	8 7315	8 8039	8 8675	8 9243
45	7 9174	8 2233	8 4044	8 5345	8 6365	8 7210	8 7933	8 8567	8 9134
46	7 9077	8 2136	8 3945	8 5245	8 6264	8 7107	8 7829	8 8462	8 9028
47	7 8983	8 2040	8 3849	8 5147	8 6165	8 7007	8 7728	8 8360	8 8924
48	7 8890	8 1947	8 3754	8 5051	8 6069	8 6910	8 7629	8 8259	8 8822
49	7 8800	8 1855	8 3662	8 4958	8 5974	8 6814	8 7532	8 8162	8 8723
50	7 8711	8 1766	8 3572	8 4867	8 5882	8 6721	8 7438	8 8066	8 8626
51	7 8624	8 1678	8 3483	8 4777	8 5791	8 6629	8 7345	8 7972	8 8532
52	7 8539	8 1592	8 3396	8 4689	8 5703	8 6539	8 7254	8 7881	8 8439
53	7 8456	8 1508	8 3311	8 4603	8 5616	8 6451	8 7166	8 7791	8 8348
54	7 8374	8 1425	8 3227	8 4519	8 5530	8 6365	8 7079	8 7703	8 8259
55	7 8293	8 1344	8 3145	8 4436	8 5447	8 6281	8 6993	8 7617	8 8172
56	7 8214	8 1264	8 3065	8 4355	8 5365	8 6198	8 6910	8 7532	8 8087
57	7 8137	8 1186	8 2986	8 4275	8 5284	8 6117	8 6828	8 7449	8 8003
58	7 8060	8 1109	8 2908	8 4197	8 5205	8 6037	8 6747	8 7368	8 7921
59	7 7986	8 1033	8 2832	8 4120	8 5128	8 5959	8 6668	8 7288	8 7840
60	7 7912	8 0959	8 2757	8 4044	8 5051	8 5882	8 6590	8 7210	8 7761

TABLE X. A. Peirce's Criterion.

Log T.

m	n = 1	2	3	4	5	6	7	8	9
61	7 7840	8.0886	8.2684	8 3970	8 4977	8 5806	8 6514	8 7133	8 7684
62	7 7768	8 0814	8.2611	8 3897	8 4903	8 5732	8 6439	8 7057	8 7607
63	7 7698	8 0744	8.2540	8 3825	8 4830	8 5659	8 6365	8 6983	8 7532
64	7 7629	8 0674	8.2470	8 3754	8 4759	8 5587	8 6293	8 6910	8 7458
65	7 7562	8 0606	8.2401	8 3685	8 4689	8 5516	8 6222	8.6838	8 7386
66	7 7495	8 0538	8 2333	8 3617	8 4620	8.5447	8 6152	8 6767	8 7315
67	7 7429	8.0472	8 2266	8 3549	8 4552	8 5378	8 6082	8 6697	8 7244
68	7 7364	8 0407	8 2200	8 3483	8 4485	8 5311	8 6015	8 6629	8 7175
69	7 7300	8 0342	8 2136	8 3418	8 4420	8 5245	8 5948	8 6562	8 7107
70	7 7237	8 0279	8 2072	8 3353	8 4355	8 5179	8 5882	8 6495	8 7040
71	7 7175	8 0217	8 2009	8 3290	8 4291	8 5115	8 5817	8 6430	8 6975
72	7 7114	8 0155	8 1947	8 3227	8 4228	8 5051	8 5753	8 6365	8 6910
73	7 7054	8 0094	8 1886	8 3166	8 4166	8 4989	8 5690	8 6302	8 6846
74	7 6994	8 0034	8 1825	8 3106	8 4105	8 4927	8 5628	8 6239	8 6783
75	7 6936	7 9975	8 1766	8 3045	8 4044	8 4867	8.5567	8 6178	8 6721
76	7 6878	7 9917	8 1707	8 2986	8 3985	8 4807	8 5506	8 6117	8 6659
77	7 6820	7 9859	8 1649	8 2928	8 3926	8 4747	8 5447	8 6057	8 6599
78	7 6764	7 9803	8 1592	8 2870	8 3868	8 4689	8 5388	8 5998	8 6539
79	7 6708	7 9747	8 1536	8 2813	8 3811	8 4632	8 5330	8 5939	8 6481
80	7 6653	7 9691	8 1480	8 2757	8 3754	8 4575	8 5273	8 5882	8 6423
81	7 6599	7 9637	8 1425	8 2702	8 3699	8 4519	8 5216	8 5825	8 6365
82	7 6546	7 9583	8 1371	8 2647	8 3644	8 4463	8 5161	8 5769	8 6309
83	7 6493	7 9529	8 1317	8 2593	8 3589	8 4409	8 5106	8 5714	8 6253
84	7 6440	7 9477	8 1264	8 2540	8 3536	8 4355	8 5051	8 5659	8 6198
85	7 6389	7 9425	8 1212	8 2487	8 3483	8 4301	8 4998	8 5605	8 6144
86	7 6337	7 9373	8 1160	8 2435	8 3431	8 4249	8 4945	8 5552	8 6090
87	7 6287	7 9322	8 1109	8 2384	8 3379	8 4197	8 4892	8 5499	8 6037
88	7 6237	7 9272	8 1058	8 2333	8 3328	8 4145	8 4841	8 5447	8 5985
99	7 6187	7 9223	8 1008	8 2283	8 3277	8 4094	8 4790	8 5395	8 5933
90	7 6139	7 9174	8 0959	8 2233	8 3227	8 4044	8 4739	8 5345	8 5882

Log R.

x	0	1	2	3	4	5	6	7	8	9
1.0	9 5015	9 4992	9 4969	9 4947	9 4924	9 4902	9 4880	9 4857	9 4835	9 4813
1.1	9 4791	9 4769	9 4747	9 4725	9 4704	9 4682	9 4661	9 4639	9 4618	9 4597
1.2	9 4575	9 4554	9 4533	9 4512	9 4491	9 4470	9 4450	9 4429	9 4408	9 4388
1.3	9 4367	9 4347	9 4327	9 4306	9 4286	9 4266	9 4246	9 4226	9 4206	9 4186
1.4	9 4167	9 4147	9 4127	9 4108	9 4088	9 4069	9 4050	9 4030	9 4011	9 3992
1.5	9 3973	9 3954	9 3935	9 3916	9 3897	9 3878	9 3860	9 3841	9 3823	9 3804
1.6	9 3786	9 3767	9 3749	9 3731	9 3712	9 3694	9 3676	9 3658	9 3640	9 3622
1.7	9 3604	9 3587	9 3569	9 3551	9 3534	9 3516	9 3498	9 3481	9 3464	9 3446
1.8	9 3429	9 3412	9 3395	9 3377	9 3360	9 3343	9 3326	9 3310	9 3293	9 3276
1.9	9 3259	9 3242	9 3226	9 3209	9 3193	9 3176	9 3160	9 3143	9 3127	9 3111
2.0	9 3095	9 3078	9 3062	9 3046	9 3030	9 3014	9 2998	9 2982	9 2966	9 2951
2.1	9 2935	9 2919	9 2904	9 2888	9 2872	9 2857	9 2841	9 2826	9 2811	9 2795
2.2	9 2780	9 2765	9 2750	9 2734	9 2719	9 2704	9 2689	9 2674	9 2659	9 2644
2.3	9 2630	9 2615	9 2600	9 2585	9 2571	9 2556	9 2541	9 2527	9 2512	9 2498
2.4	9 2483	9 2469	9 2455	9 2440	9 2426	9 2412	9 2398	9 2383	9 2369	9 2355
2.5	9 2341	9 2327	9 2313	9 2299	9 2285	9 2272	9 2258	9 2244	9 2230	9 2217
2.7	9 2203	9 2189	9 2176	9 2162	9 2149	9 2135	9 2122	9 2108	9 2095	9 2082
2.7	9 2068	9 2055	9 2042	9 2029	9 2016	9 2002	9 1989	9 1976	9 1963	9 1950
2.8	9 1937	9 1924	9 1912	9 1899	9 1886	9 1873	9 1860	9 1848	9 1835	9 1823
2.9	9 1810	9 1797	9 1785	9 1773	9 1760	9 1748	9 1735	9 1723	9 1711	9 1698
3.0	9 1686									

TABLES

FOR CORRECTING

LUNAR DISTANCES.

TABLE XI. Dip of the Sea Horizon

Height of the Eye	Dip of the Horizon
Feet	′ ″
0	0 00
1	0 59
2	1 23
3	1 42
4	1 58
5	2 11
6	2 24
7	2 36
8	2 46
9	2 56
10	3 06
11	3 15
12	3 24
13	3 32
14	3 40
15	3 48
16	3 55
17	4 02
18	4 09
19	4 16
20	4 23
21	4 29
22	4 36
23	4 42
24	4 48
25	4 54
26	5 00
27	5 06
28	5 11
29	5 17
30	5 22
35	5 48
40	6 12
45	6 34
50	6 56
55	7 16
60	7 35
65	7 54
70	8 12
75	8 29
80	8 46
85	9 02
90	9 18
95	9 33
100	9 48

TABLE XII. Augmentation of the Moon's Semidiameter

Apparent Altitude of ☽	Horizontal Semidiameter 14′ 30″	15′ 0″	15′ 30″	16′ 0″	16′ 30″	17′ 0″
°	″	″	″	″	″	″
0	0 1	0 1	0 1	0 1	0 2	0 2
2	0 6	0 6	0 7	0 7	0 8	0 8
4	1 0	1 1	1 2	1 3	1 4	1 5
6	1 5	1 6	1 7	1 9	2 0	2 1
8	2 0	2 1	2 3	2 4	2 6	2 7
10	2 4	2 6	2 8	3 0	3 2	3 4
12	2 9	3 1	3 3	3 6	3 8	4 0
14	3 4	3 6	3 9	4 1	4 4	4 7
16	3 8	4 1	4 4	4 7	5 0	5 3
18	4 3	4 6	4 9	5 2	5 6	5 9
20	4 7	5 1	5 4	5 8	6 1	6 5
22	5 2	5 5	5 9	6 3	6 7	7 1
24	5 6	6 0	6 4	6 8	7 3	7 7
26	6 0	6 5	6 9	7 4	7 8	8 3
28	6 5	6 9	7 4	7 9	8 4	8 9
30	6 9	7 3	7 9	8 4	8 9	9 5
32	7 3	7 8	8 3	8 9	9 4	10 0
34	7 7	8 2	8 8	9 4	10 0	10 6
36	8 1	8 6	9 2	9 8	10 5	11 1
38	8 4	9 0	9 7	10 3	10 9	. 6
40	8 8	9 4	10 1	10 7	11 4	12 1
42	9 2	9 8	10 5	11 2	11 9	12 6
44	9 5	10 2	10 9	11 6	12 3	13 1
46	9 8	10 5	11 3	12 0	12 8	13 6
48	10 2	10 9	11 6	12 4	13 2	14 0
50	10 5	11 2	12 0	12 8	13 6	14 4
52	10 8	11 5	12 3	13 1	14 0	14 9
54	11 1	11 8	12 7	13 5	14 4	15 3
56	11 3	12 1	13 0	13 8	14 7	15 6
58	11 6	12 4	13 3	14 1	15 1	16 0
60	11 8	12 7	13 5	14 4	15 4	16 3
62	12 1	12 9	13 8	14 7	15 7	16 6
64	12 3	13 2	14 1	15 0	16 0	16 9
66	12 5	13 4	14 3	15 2	16 2	17 2
68	12 7	13 6	14 5	15 5	16 5	17 5
70	12 9	13 8	14 7	15 7	16 7	17 7
72	13 0	13 9	14 9	15 9	16 9	17 9
74	13 1	14 1	15 0	16 0	17 1	18 1
76	13 3	14 2	15 2	16 2	17 2	18 3
78	13 4	14 3	15 3	16 3	17 4	18 4
80	13 5	14 4	15 4	16 4	17 5	18 6
82	13 5	14 5	15 5	16 5	17 6	18 7
84	13 6	14 6	15 6	16 6	17 6	18 7
86	13 6	14 6	15 6	16 6	17 7	18 8
88	13 7	14 6	15 6	16 7	17 7	18 8
90	13 7	14 6	15 6	16 7	17 7	18 8

TABLE XIII. Correction of the Moon's Eq Parallax

Latitude	Equatorial Parallax 53′	57′	61′
°	″	″	″
0	0 0	0 0	0 0
2	0 0	0 0	0 0
4	0 1	0 1	0 1
6	0 1	0 1	0 1
8	0 2	0 2	0 2
10	0 3	0 3	0 4
12	0 5	0 5	0 5
14	0 6	0 7	0 7
16	0 8	0 9	0 9
18	1 0	1 1	1 2
20	1 2	1 3	1 4
22	1 5	1 6	1 7
24	1 8	1 9	2 0
26	2 0	2 2	2 4
28	2 3	2 5	2 7
30	2 7	2 9	3 1
32	3 0	3 2	3 4
34	3 3	3 6	3 8
36	3 6	3 9	4 1
38	4 0	4 3	4 6
40	4 4	4 7	5 1
42	4 8	5 1	5 5
44	5 1	5 5	5 9
46	5 5	5 9	6 3
48	5 9	6 3	6 8
50	6 2	6 7	7 2
52	6 6	7 1	7 6
54	6 9	7 5	8 0
56	7 3	7 9	8 4
58	7 5	8 0	8 6
60	8 0	8 6	9 2
62	8 3	8 9	9 5
64	8 6	9 2	9 9
66	8 9	9 5	10 2
68	9 1	9 8	10 5
70	9 4	10 1	10 8
72	9 6	10 3	11 1
74	9 8	10 6	11 3
76	10 0	10 8	11 5
78	10 2	10 9	11 7
80	10 3	11 1	11 9
82	10 4	11 2	12 0
84	10 5	11 3	12 1
86	10 6	11 4	12 2
88	10 6	11 4	12 2
90	10 6	11 4	12 2

TABLE XIV. Mean Reduced Refraction for Lunars.

Barometer 30 inches   Fahrenheit's Thermometer 50°

Apparent Altitude	Reduced Refraction	Difference for 1′	Apparent Altitude	Reduced Refraction	Apparent Altitude	Reduced Refraction	Apparent Altitude	Reduced Refraction
° ′	′ ″	″	° ′	′ ″	° ′	′ ″	° ′	′ ″
5 0	9 54.2	1.6	10 0	5 24.1	15 0	3 41.7	27 0	2 7.8
5	9 46.3	1.5	5	5 21.6	10	3 39.4	27 30	2 5.7
10	9 38.6	1.5	10	5 19.2	20	3 37.1	28 0	2 3.7
15	9 31.1	1.5	15	5 16.8	30	3 34.9	28 30	2 1.7
20	9 23.7	1.4	20	5 14.4	40	3 32.7	29 0	1 59.8
25	9 16.5	1.4	25	5 12.1	50	3 30.6	29 30	1 58.0
5 30	9 9.5	1.4	10 30	5 9.8	16 0	3 28.5	30 0	1 56.2
35	9 2.7	1.3	35	5 7.5	10	3 26.5	30 30	1 54.5
40	8 56.0	1.3	40	5 5.3	20	3 24.5	31 0	1 52.8
45	8 49.5	1.3	45	5 3.1	30	3 22.6	31 30	1 51.2
50	8 43.1	1.2	50	5 0.9	40	3 20.7	32 0	1 49.7
55	8 36.9	1.2	55	4 58.8	50	3 18.8	32 30	1 48.2
6 0	8 30.8	1.2	11 0	4 56.7	17 0	3 16.9	33 0	1 46.7
5	8 24.9	1.2	5	4 54.6	10	3 15.1	33 30	1 45.3
10	8 19.1	1.1	10	4 52.5	20	3 13.4	34 0	1 44.0
15	8 13.4	1.1	15	4 50.5	30	3 11.6	34 30	1 42.7
20	8 7.8	1.1	20	4 48.5	40	3 9.9	35 0	1 41.4
25	8 2.3	1.1	25	4 46.6	50	3 8.2	35 30	1 40.2
6 30	7 57.0	1.0	11 30	4 44.6	18 0	3 6.6	36 0	1 39.0
35	7 51.8	1.0	35	4 42.7	10	3 5.0	36 30	1 37.8
40	7 46.7	1.0	40	4 40.8	20	3 3.4	37 0	1 36.7
45	7 41.7	1.0	45	4 38.9	30	3 1.8	37 30	1 35.6
50	7 36.8	1.0	50	4 37.1	40	3 0.3	38 0	1 34.5
55	7 31.9	0.9	55	4 35.3	50	2 58.8	38 30	1 33.5
7 0	7 27.2	0.9	12 0	4 33.5	19 0	2 57.3	39 0	1 32.5
5	7 22.6	0.9	5	4 31.7	10	2 55.9	39 30	1 31.5
10	7 18.1	0.9	10	4 30.0	20	2 54.4	40 0	1 30.6
15	7 13.6	0.9	15	4 28.3	30	2 53.0	40 30	1 29.6
20	7 9.2	0.9	20	4 26.6	40	2 51.6	41 0	1 28.7
25	7 4.9	0.8	25	4 24.9	50	2 50.3	41 30	1 27.8
7 30	7 0.7	0.8	12 30	4 23.2	20 0	2 49.0	42 0	1 27.0
35	6 56.6	0.8	35	4 21.6	10	2 47.6	42 30	1 26.2
40	6 52.6	0.8	40	4 20.0	20	2 46.4	43 0	1 25.4
45	6 48.6	0.8	45	4 18.4	30	2 45.1	43 30	1 24.6
50	6 44.7	0.8	50	4 16.8	40	2 43.8	44 0	1 23.8
55	6 40.9	0.7	55	4 15.2	50	2 42.6	44 30	1 23.1
8 0	6 37.2	0.7	13 0	4 13.7	21 0	2 41.4	45 0	1 22.4
5	6 33.5	0.7	5	4 12.2	10	2 40.2	46 0	1 21.0
10	6 29.9	0.7	10	4 10.7	20	2 39.0	47 0	1 19.6
15	6 26.3	0.7	15	4 9.2	30	2 37.9	48 0	1 18.4
20	6 22.8	0.7	20	4 7.7	40	2 36.7	49 0	1 17.2
25	6 19.4	0.7	25	4 6.3	50	2 35.6	50 0	1 16.0
8 30	6 16.0	0.7	13 30	4 4.8	22 0	2 34.5	51 0	1 15.0
35	6 12.7	0.6	35	4 3.4	10	2 33.4	52 0	1 13.9
40	6 9.5	0.6	40	4 2.0	20	2 32.4	53 0	1 13.0
45	6 6.3	0.6	45	4 0.6	30	2 31.3	54 0	1 12.0
50	6 3.1	0.6	50	3 59.3	40	2 30.3	55 0	1 11.1
55	6 0.0	0.6	55	3 57.9	50	2 29.2	56 0	1 10.3
9 0	5 57.0	0.6	14 0	3 56.6	23 0	2 28.2	57 0	1 9.5
5	5 54.0	0.6	5	3 55.3	20	2 26.3	58 0	1 8.7
10	5 51.1	0.6	10	3 54.0	40	2 24.4	59 0	1 8.0
15	5 48.2	0.6	15	3 52.7	24 0	2 22.5	60 0	1 7.3
20	5 45.3	0.6	20	3 51.4	20	2 20.7	62 0	1 6.0
25	5 42.5	0.5	25	3 50.1	40	2 18.9	64 0	1 4.9
9 30	5 39.7	0.5	14 30	3 48.9	25 0	2 17.2	66 0	1 3.9
35	5 37.0	0.5	35	3 47.6	20	2 15.5	68 0	1 2.9
40	5 34.4	0.5	40	3 46.4	40	2 13.9	70 0	1 2.0
45	5 31.8	0.5	45	3 45.2	26 0	2 12.3	73 0	1 1.0
50	5 29.2	0.5	50	3 44.0	20	2 10.8	76 0	1 0.1
55	5 26.6	0.5	55	3 42.8	40	2 9.3	80 0	0 59.2
10 0	5 24.1		15 0	3 41.7	27 0	2 7.8	90 0	0 58.3

TABLE XIV. A.

Correction of the Mean Refraction for the Height of the Barometer

Barom Subtract	MEAN REFRACTION																					Barom Add
	0′		1′		2′		3′		4′		5′		6′		7′		8′		9′		10′	
	0″	30″	0″	30″	0″	30″	0″	30″	0″	30″	0″	30″	0″	30″	0″	30″	0″	30″	0″	30″	0″	
	″	″	″	″	″	″	″	″	″	″	″	″	″	″	″	″	″	″	″	″	″	
27.50	0	2	5	7	10	12	15	17	20	23	25	28	30	33	35	38	40	43	45	48	51	
27.55	0	2	5	7	10	12	15	17	20	22	25	27	30	32	35	37	40	42	45	47	50	
27.60	0	2	5	7	10	12	14	17	19	22	24	27	29	31	34	36	39	41	44	46	49	
27.65	0	2	5	7	9	12	14	16	19	21	24	26	28	31	33	36	38	40	43	45	48	
27.70	0	2	5	7	9	11	14	16	18	21	23	25	28	30	32	35	37	39	42	44	47	
27.75	0	2	4	7	9	11	13	16	18	20	23	25	27	29	32	34	36	39	41	43	46	
27.80	0	2	4	7	9	11	13	15	18	20	22	24	27	29	31	33	35	38	40	42	45	
27.85	0	2	4	6	9	11	13	15	17	19	22	24	26	28	30	32	35	37	39	41	44	
27.90	0	2	4	6	8	10	13	15	17	19	21	23	25	27	30	32	34	36	38	40	43	
27.95	0	2	4	6	8	10	12	14	16	18	21	23	25	27	29	31	33	35	37	39	42	
28.00	0	2	4	6	8	10	12	14	16	18	20	22	24	26	28	30	32	34	36	38	41	
28.05	0	2	4	6	8	10	12	14	16	18	20	22	24	25	27	29	31	33	35	37	39	
28.10	0	2	4	6	8	9	11	13	15	17	19	21	23	25	27	29	31	33	34	36	38	
28.15	0	2	4	6	7	9	11	13	15	17	19	20	22	24	26	28	30	32	34	36	37	
28.20	0	2	4	5	7	9	11	13	14	16	18	20	22	24	25	27	29	31	33	35	36	
28.25	0	2	3	5	7	9	10	12	14	16	18	19	21	23	25	26	28	30	32	34	35	
28.30	0	2	3	5	7	8	10	12	14	15	17	19	21	22	24	26	27	29	31	33	34	
28.35	0	2	3	5	7	8	10	12	13	15	17	18	20	22	23	25	27	28	30	32	33	
28.40	0	2	3	5	6	8	10	11	13	14	16	18	19	21	23	24	26	27	29	31	32	
28.45	0	2	3	5	6	8	9	11	12	14	16	17	19	20	22	23	25	27	28	30	31	
28.50	0	1	3	4	6	7	9	10	12	14	15	17	18	20	21	23	24	26	27	29	30	31.50
28.55	0	1	3	4	6	7	9	10	12	13	15	16	17	19	20	22	23	25	26	28	29	31.45
28 60	0	1	3	4	6	7	8	10	11	13	14	15	17	18	20	21	23	24	25	27	28	31.40
28.65	0	1	3	4	5	7	8	9	11	12	14	15	16	18	19	20	22	23	25	26	27	31.35
28.70	0	1	3	4	5	6	8	9	10	12	13	14	16	17	18	20	21	22	24	25	26	31.30
28 75	0	1	2	4	5	6	7	9	10	11	13	14	15	16	18	19	20	21	23	24	25	31.25
28.80	0	1	2	4	5	6	7	8	10	11	12	13	14	16	17	18	19	21	22	23	24	31.20
28.85	0	1	2	3	5	6	7	8	9	10	12	13	14	15	16	17	19	20	21	22	23	31.15
28.90	0	1	2	3	4	5	7	8	9	10	11	12	13	14	16	17	18	19	20	21	22	31.10
28.95	0	1	2	3	4	5	6	7	8	9	11	12	13	14	15	16	17	18	19	20	21	31.05
29 00	0	1	2	3	4	5	6	7	8	9	10	11	12	13	14	15	16	17	18	19	20	31.00
29.05	0	1	2	3	4	5	6	7	8	9	10	11	11	12	13	14	15	16	17	18	19	30.95
29.10	0	1	2	3	4	4	5	6	7	8	9	10	11	12	13	14	15	15	16	17	18	30.90
29.15	0	1	2	3	3	4	5	6	7	8	9	9	10	11	12	13	14	15	15	16	17	30.85
29.20	0	1	2	2	3	4	5	6	6	7	8	9	10	10	11	12	13	14	15	15	16	30.80
29.25	0	1	1	2	3	4	4	5	6	7	8	8	9	10	11	11	12	13	14	14	15	30.75
29 30	0	1	1	2	3	3	4	5	6	6	7	8	8	9	10	11	11	12	13	13	14	30.70
29.35	0	1	1	2	3	3	4	5	5	6	7	7	8	9	9	10	10	11	12	13	13	30.65
29.40	0	1	1	2	2	3	4	4	5	5	6	7	7	8	8	9	10	10	11	12	12	30.60
29.45	0	1	1	2	2	3	3	4	4	5	6	6	7	7	8	8	9	9	10	11	11	30.55
29.50	0	0	1	1	2	2	3	3	4	5	5	6	6	7	7	8	8	9	9	10	10	30.50
29.55	0	0	1	1	2	2	3	3	4	4	5	5	5	6	6	7	7	8	8	9	9	30.45
29 60	0	0	1	1	2	2	2	3	3	4	4	4	5	5	6	6	6	7	7	8	8	30.40
29 65	0	0	1	1	1	2	2	2	3	3	4	4	4	5	5	5	6	6	6	7	7	30.35
29.70	0	0	1	1	1	1	2	2	2	3	3	3	4	4	4	5	5	5	5	6	6	30.30
29.75	0	0	0	1	1	1	1	2	2	2	3	3	3	3	4	4	4	4	5	5	5	30.25
29.80	0	0	0	1	1	1	1	1	2	2	2	2	2	3	3	3	3	3	4	4	4	30.20
29.85	0	0	0	0	1	1	1	1	1	1	2	2	2	2	2	2	2	3	3	3	3	30.15
29.90	0	0	0	0	0	0	1	1	1	1	1	1	1	1	1	2	2	2	2	2	2	30.10
29.95	0	0	0	0	0	0	0	0	0	0	1	1	1	1	1	1	1	1	1	1	1	30.05
30.00	0	0	0	0	0	0	0	0	0	0	0	0	0	0	0	0	0	0	0	0	0	30.00
Subtract	0″	30″	0″	30″	0 ′	30″	0″	30″	0″	30″	0″	30″	0″	30″	0″	30″	0″	30″	0″	30″	0″	Add
	0′		1′		2′		3′		4′		5′		6′		7′		8′		9′		10	
B ırom	MEAN REFRACTION																					Barom

TABLE XIV. B.

Correction of the Mean Refraction for the Height of the Thermometer

Thermo Add.	MEAN REFRACTION 0′ 0″	0′ 30″	1′ 0″	1′ 30″	2′ 0″	2′ 30″	3′ 0″	3′ 0″	4′ 0″	4′ 30″	5′ 0″	5′ 30″	6′ 0″	6′ 30″	7′ 0″	7′ 30″	8′ 0″	8′ 30″	9′ 0″	9′ 30″	10′ 0″	Thermo Add
°	″	″	″	″	″	″	″	′	″	″	″	″	″	″	″	″	″	″	″	″	″	°
− 10	0	4	8	12	16	20	24	28	33	37	41	46	50	55	60	65	70	75	80	85	90	− 10
− 8	0	4	8	12	15	19	23	27	31	36	40	44	48	53	58	62	67	72	77	82	87	− 8
− 6	0	4	7	11	15	19	22	26	30	34	38	42	47	51	55	60	64	69	74	79	84	− 6
− 4	0	4	7	11	14	18	22	25	29	33	37	41	45	49	53	57	62	66	71	76	80	− 4
− 2	0	3	7	10	14	17	21	24	28	31	35	39	43	47	51	55	59	64	68	72	77	− 2
0	0	3	7	10	13	16	20	23	27	30	34	37	41	45	49	53	57	61	65	69	74	0
+ 2	0	3	6	9	12	16	19	22	25	29	32	36	39	43	47	50	54	58	62	66	70	+ 2
4	0	3	6	9	12	15	18	21	24	28	31	34	37	41	44	48	52	55	59	63	67	4
6	0	3	6	8	11	14	17	20	23	26	29	32	36	39	42	46	49	53	56	60	64	6
8	0	3	5	8	11	14	16	19	22	25	28	31	34	37	40	43	47	50	54	57	61	8
10	0	3	5	8	10	13	15	18	21	24	26	29	[illegible]	35	38	41	44	48	51	54	58	10
11	0	2	5	7	10	13	15	18	20	23	26	28	31	34	37	40	43	46	49	53	56	11
12	0	2	5	7	10	12	15	17	20	22	25	28	30	33	36	39	42	45	48	51	54	12
13	0	2	5	7	9	12	14	17	19	22	24	27	30	32	35	38	41	44	47	50	53	13
14	0	2	5	7	9	11	14	16	19	21	24	26	29	31	34	37	40	42	45	48	51	14
15	0	2	4	7	9	11	13	16	18	20	23	25	28	30	33	36	38	41	44	47	50	15
16	0	2	4	6	9	11	13	15	18	20	22	25	27	29	32	35	37	40	43	45	48	16
17	0	2	4	6	8	10	13	15	17	19	21	24	26	29	31	33	36	39	41	44	47	17
18	0	2	4	6	8	10	12	14	16	19	21	23	25	28	30	32	35	37	40	43	45	18
19	0	2	4	6	8	10	12	14	16	18	20	22	24	27	29	31	34	36	39	41	44	19
20	0	2	4	6	8	9	11	13	15	17	19	22	24	26	28	30	33	35	37	40	42	20
21	0	2	4	5	7	9	11	13	15	17	19	21	23	25	27	29	31	34	36	38	41	21
22	0	2	3	5	7	9	11	12	14	16	18	20	22	24	26	28	30	32	35	37	39	22
23	0	2	3	5	7	8	10	12	14	15	17	19	21	23	25	27	29	31	33	36	38	23
24	0	2	3	5	6	8	10	11	13	15	17	18	20	22	24	26	28	30	32	34	36	24
25	0	2	3	5	6	8	9	11	13	14	16	18	19	21	23	25	27	29	31	33	35	25
26	0	1	3	4	6	7	9	11	12	14	15	17	19	20	22	24	26	28	29	31	33	26
27	0	1	3	4	6	7	9	10	12	13	15	16	18	19	21	23	25	26	28	30	32	27
28	0	1	3	4	5	7	8	10	11	12	14	15	17	19	20	22	23	25	27	29	30	28
29	0	1	3	4	5	6	8	9	11	12	13	15	16	18	19	21	22	24	26	27	29	29
30	0	1	2	4	5	6	7	9	10	11	13	14	15	17	18	20	21	23	24	26	28	30
31	0	1	2	3	5	6	7	8	9	11	12	13	15	16	17	19	20	22	23	25	26	31
32	0	1	2	3	4	6	7	8	9	10	11	13	14	15	16	18	19	20	22	23	25	32
33	0	1	2	3	4	5	6	7	8	10	11	12	13	14	15	17	18	19	21	22	23	33
34	0	1	2	3	4	5	6	7	8	9	10	11	12	13	14	16	17	18	19	21	22	34
35	0	1	2	3	4	5	6	6	7	8	9	10	11	13	14	15	16	17	18	19	20	35
36	0	1	2	3	3	4	5	6	7	8	9	10	11	12	13	14	15	16	17	18	19	36
37	0	1	2	2	3	4	5	6	6	7	8	9	10	11	12	13	14	15	16	17	18	37
38	0	1	1	2	3	4	4	5	6	7	7	8	9	10	11	12	13	13	14	15	16	38
39	0	1	1	2	3	3	4	5	5	6	7	8	8	9	10	11	11	12	13	14	15	39
40	0	1	1	2	2	3	4	4	5	6	6	7	8	8	9	10	10	11	12	13	13	40
41	0	1	1	2	2	3	3	4	4	5	6	6	7	7	8	9	9	10	11	11	12	41
42	0	0	1	1	2	2	3	3	4	4	5	5	6	7	7	8	8	9	9	10	11	42
43	0	0	1	1	2	2	3	3	3	4	4	5	5	6	6	7	7	8	8	9	9	43
44	0	0	1	1	1	2	2	3	3	3	4	4	4	5	5	6	6	7	7	8	8	44
45	0	0	1	1	1	1	2	2	2	3	3	3	4	4	4	5	5	6	6	6	7	45
46	0	0	0	1	1	1	1	2	2	2	2	2	3	3	4	4	4	4	5	5	5	46
47	0	0	0	1	1	1	1	1	1	2	2	2	2	2	3	3	3	3	4	4	4	47
48	0	0	0	0	0	1	1	1	1	1	1	1	1	2	2	2	2	2	2	2	3	48
49	0	0	0	0	0	0	0	0	0	1	1	1	1	1	1	1	1	1	1	1	1	49
50	0	0	0	0	0	0	0	0	0	0	0	0	0	0	0	0	0	0	0	0	0	50
Add Thermo	0″	30″	0″	30″	0″	30″	0″	30″	0″	30″	0″	30″	0″	30′	0″	30″	0″	30″	0″	30″	0″	Add Thermo
	0′		1′		2′		3′		4′		5′		6′		7′		8		9′		10	
	MEAN REFRACTION																					

TABLE XIV. B.

Correction of the Mean Refraction for the Height of the Thermometer

Thermo Subtract	MEAN REFRACTION.																					Thermo Subtract.
	0′		1′		2′		3′		4′		5′		6′		7′		8′		9′		10′	
	0″	30″	0″	30″	0″	30″	0″	30″	0″	30″	0″	30″	0″	30″	0″	30″	0″	30″	0″	30″	0″	
°	″	″	″	″	″	″	″	″	″	″	″	″	″	″	″	″	″	″	″	″	″	°
50	0	0	0	0	0	0	0	0	0	0	0	0	0	0	0	0	0	0	0	0	0	50
51	0	0	0	0	0	0	0	0	0	1	1	1	1	1	1	1	1	1	1	1	1	51
52	0	0	0	0	0	1	1	1	1	1	1	1	1	2	2	2	2	2	2	2	3	52
53	0	0	0	1	1	1	1	1	1	2	2	2	2	2	2	3	3	3	3	4	4	53
54	0	0	0	1	1	1	1	2	2	2	2	3	3	3	3	4	4	4	5	5	5	54
55	0	0	1	1	1	1	2	2	2	3	3	3	4	4	4	5	5	5	6	6	6	55
56	0	0	1	1	1	2	2	2	3	3	4	4	4	5	5	6	6	6	7	7	8	56
57	0	0	1	1	2	2	2	3	3	4	4	5	5	6	6	6	7	8	8	8	9	57
58	0	0	1	1	2	2	3	3	4	4	5	5	6	6	7	7	8	9	9	10	10	58
59	0	1	1	2	2	3	3	4	4	5	5	6	6	7	8	8	9	10	10	11	12	59
60	0	1	1	2	2	3	3	4	5	5	6	7	7	8	9	9	10	11	11	12	13	60
61	0	1	1	2	3	3	4	4	5	6	7	7	8	9	9	10	11	12	12	13	14	61
62	0	1	1	2	3	3	4	5	6	6	7	8	9	9	10	11	12	13	14	15	15	62
63	0	1	1	2	3	4	5	5	6	7	8	8	9	10	11	12	13	14	15	16	17	63
64	0	1	2	2	3	4	5	6	7	7	8	9	10	11	12	13	14	15	16	17	18	64
65	0	1	2	3	3	4	5	6	7	8	9	10	11	12	13	14	15	16	17	18	19	65
66	0	1	2	3	4	5	6	6	7	8	9	10	11	12	14	15	16	17	18	19	20	66
67	0	1	2	3	4	5	6	7	8	9	10	11	12	13	14	16	17	18	19	20	22	67
68	0	1	2	3	4	5	6	7	8	9	11	11	13	14	15	16	18	19	20	22	23	68
69	0	1	2	3	4	5	7	8	9	10	11	12	13	15	16	17	19	20	21	23	24	69
70	0	1	2	3	5	6	7	8	9	10	12	12	14	16	17	18	20	21	22	24	25	70
71	0	1	2	4	5	6	7	8	10	11	12	13	15	16	18	19	20	22	23	25	27	71
72	0	1	2	4	5	6	8	9	10	11	13	14	16	17	18	20	21	23	25	26	28	72
73	0	1	3	4	5	7	8	9	11	12	13	14	16	18	19	21	22	24	26	27	29	73
74	0	1	3	4	5	7	8	10	11	12	14	15	17	18	20	22	23	25	27	28	30	74
75	0	1	3	4	6	7	8	10	11	13	14	16	18	19	21	22	24	26	28	29	31	75
76	0	1	3	4	6	7	9	10	12	13	15	16	18	20	22	23	25	27	29	31	32	76
77	0	1	3	5	6	8	9	11	12	14	16	17	19	21	22	24	26	28	30	32	34	77
78	0	2	3	5	6	8	9	11	13	14	16	18	20	21	23	25	27	29	31	33	35	78
79	0	2	3	5	6	8	10	11	13	15	17	18	20	22	24	26	28	30	32	34	36	79
80	0	2	3	5	7	8	10	12	14	15	17	19	21	23	25	27	29	31	33	35	37	80
81	0	2	3	5	7	9	10	12	14	16	18	20	21	24	26	28	30	32	34	36	38	81
82	0	2	4	5	7	9	11	13	14	16	18	20	22	24	26	28	31	33	35	37	40	82
83	0	2	4	5	7	9	11	13	15	17	19	21	23	25	27	29	31	34	36	38	41	83
84	0	2	4	6	8	9	11	13	15	17	19	21	23	26	28	30	32	35	37	39	42	84
85	0	2	4	6	8	10	12	14	16	18	20	22	24	26	29	31	33	36	38	40	43	85
86	0	2	4	6	8	10	12	14	16	18	20	23	25	27	29	32	34	37	39	42	44	86
87	0	2	4	6	8	10	12	14	17	19	21	23	25	28	30	32	35	38	40	43	45	87
88	0	2	4	6	8	10	13	15	17	19	21	24	26	28	31	33	36	38	41	44	46	88
89	0	2	4	6	9	11	13	15	17	20	22	24	27	29	32	34	37	39	42	45	48	89
90	0	2	4	7	9	11	13	16	18	20	23	25	27	30	32	35	38	40	43	46	49	90
91	0	2	4	7	9	11	14	16	18	21	23	25	28	31	33	36	39	41	44	47	50	91
92	0	2	5	7	9	11	14	16	19	21	24	26	29	31	34	37	39	42	45	48	51	92
93	0	2	5	7	9	12	14	17	19	22	24	27	29	32	35	37	40	43	46	49	52	93
94	0	2	5	7	10	12	14	17	19	22	25	27	30	33	35	38	41	44	47	50	53	94
95	0	2	5	7	10	12	15	17	20	22	25	28	30	33	36	39	42	45	48	51	54	95
96	0	2	5	7	10	12	15	18	20	23	26	28	31	34	37	40	43	46	49	52	55	96
97	0	3	5	8	10	13	15	18	21	23	26	29	32	35	38	41	44	47	50	53	56	97
98	0	3	5	8	10	13	16	18	21	24	27	29	32	35	38	41	44	48	51	54	58	98
99	0	3	5	8	11	13	16	19	21	24	27	30	33	36	39	42	45	49	52	55	59	99
100	0	3	5	8	11	13	16	19	22	25	28	31	34	37	40	43	46	50	53	56	60	100
Subtract	0″	30″	0″	30″	0″	30″	0″	30″	0″	30″	0″	30″	0″	30″	0″	30″	0″	30″	0″	30″	0″	Subtract
	0′		1′		2′		3′		4′		5′		6′		7′		8′		9′		10′	
Thermo	MEAN REFRACTION																					Thermo

TABLE XV. Log A.

For correcting Lunar Distances

App Alt of ☽		REDUCED PARALLAX AND REFRACTION OF ☽														
°	′	41′	42′	43′	44′	45′	46′	47′	48′	49′	50′	51′	52′	53′	54′	55′
5	0	0288	0295	0301	0308	0315	0321	0328	0335	0341	0348	0355	0361	0368		
	2	0286	0293	0299	0306	0313	0319	0326	0333	0339	0346	0352	0359	0366		
	4	0284	0291	0297	0304	0311	0317	0324	0330	0337	0344	0350	0357	0363		
	6	0282	0289	0296	0302	0309	0315	0322	0328	0335	0341	0348	0354	0361		
	8	0281	0287	0294	0300	0307	0313	0320	0326	0333	0339	0346	0352	0359		
5	10	0279	0285	0292	0298	0305	0311	0318	0324	0331	0337	0344	0350	0356		
	12	0277	0284	0290	0296	0303	0309	0316	0322	0329	0335	0341	0348	0354		
	14	0275	0282	0288	0295	0301	0307	0314	0320	0327	0333	0339	0346	0352		
	16	0274	0280	0286	0293	0299	0306	0312	0318	0325	0331	0337	0344	0350		
	18	0272	0278	0285	0291	0297	0304	0310	0316	0323	0329	0335	0341	0348		
5	20	0270	0277	0283	0289	0296	0302	0308	0314	0321	0327	0333	0339	0346		
	22	0269	0275	0281	0288	0294	0300	0306	0313	0319	0325	0331	0337	0344		
	24	0267	0273	0280	0286	0292	0298	0304	0311	0317	0323	0329	0335	0341		
	26	0265	0272	0278	0284	0290	0296	0303	0309	0315	0321	0327	0333	0339	0346	
	28	0264	0270	0276	0282	0289	0295	0301	0307	0313	0319	0325	0331	0337	0344	
5	30	0262	0268	0275	0281	0287	0293	0299	0305	0311	0317	0323	0329	0335	0342	
	32	0261	0267	0273	0279	0285	0291	0297	0303	0309	0315	0321	0327	0334	0340	
	34	0259	0265	0271	0277	0283	0290	0296	0302	0308	0314	0320	0326	0332	0338	
	36	0258	0264	0270	0276	0282	0288	0294	0300	0306	0312	0318	0324	0330	0336	
	38		0262	0268	0274	0280	0286	0292	0298	0304	0310	0316	0322	0328	0334	
5	40		0261	0267	0273	0279	0285	0290	0296	0302	0308	0314	0320	0326	0332	
	42		0259	0265	0271	0277	0283	0289	0295	0301	0306	0312	0318	0324	0330	
	44		0258	0264	0270	0275	0281	0287	0293	0299	0305	0311	0316	0322	0328	
	46		0256	0262	0268	0274	0280	0286	0291	0297	0303	0309	0315	0320	0326	
	48		0255	0261	0267	0272	0278	0284	0290	0296	0301	0307	0313	0319	0324	
5	50		0253	0259	0265	0271	0277	0282	0288	0294	0300	0305	0311	0317	0323	
	52		0252	0258	0264	0269	0275	0281	0287	0292	0298	0304	0309	0315	0321	
	54		0251	0256	0262	0268	0274	0279	0285	0291	0296	0302	0308	0313	0319	
	56		0249	0255	0261	0266	0272	0278	0283	0289	0295	0300	0306	0312	0317	
	58		0248	0254	0259	0265	0271	0276	0282	0287	0293	0299	0304	0310	0316	
6	0		0247	0252	0258	0263	0269	0275	0280	0286	0291	0297	0303	0308	0314	
	2		0245	0251	0256	0262	0268	0273	0279	0284	0290	0295	0301	0307	0312	
	4		0244	0249	0255	0261	0266	0272	0277	0283	0288	0294	0299	0305	0310	
	6		0243	0248	0254	0259	0265	0270	0276	0281	0287	0292	0298	0303	0309	
	8		0241	0247	0252	0258	0263	0269	0274	0280	0285	0291	0296	0302	0307	
6	10		0240	0246	0251	0256	0262	0267	0273	0278	0284	0289	0295	0300	0306	
	12		0239	0244	0250	0255	0261	0266	0271	0277	0282	0288	0293	0299	0304	
	14		0237	0243	0248	0254	0259	0265	0270	0275	0281	0286	0292	0297	0302	
	16		0236	0242	0247	0252	0258	0263	0269	0274	0279	0285	0290	0295	0301	
	18		0235	0240	0246	0251	0257	0262	0267	0273	0278	0283	0289	0294	0299	
6	20		0234	0239	0245	0250	0255	0261	0266	0271	0276	0282	0287	0292	0298	
	22		0233	0238	0243	0249	0254	0259	0264	0270	0275	0280	0286	0291	0296	
	24		0231	0237	0242	0247	0253	0258	0263	0268	0274	0279	0284	0289	0295	
	26			0236	0241	0246	0251	0257	0262	0267	0272	0277	0283	0288	0293	
	28			0234	0240	0245	0250	0255	0260	0266	0271	0276	0281	0286	0292	0297
6	30			0233	0238	0244	0249	0254	0259	0264	0270	0275	0280	0285	0290	0295
	32			0232	0237	0242	0248	0253	0258	0263	0268	0273	0278	0284	0289	0294
	34			0231	0236	0241	0246	0251	0257	0262	0267	0272	0277	0282	0287	0292
	36			0230	0235	0240	0245	0250	0255	0260	0266	0271	0276	0281	0286	0291
	38			0229	0234	0239	0244	0249	0254	0259	0264	0269	0274	0279	0284	0290
6	40			0227	0232	0238	0243	0248	0253	0258	0263	0268	0273	0278	0283	0288
	42			0226	0231	0236	0241	0246	0252	0257	0262	0267	0272	0277	0282	0287
	44			0225	0230	0235	0240	0245	0250	0255	0260	0265	0270	0275	0280	0285
	46			0224	0229	0234	0239	0244	0249	0254	0259	0264	0269	0274	0279	0284
	48			0223	0228	0233	0238	0243	0248	0253	0258	0263	0268	0273	0278	0283
6	50			0222	0227	0232	0237	0242	0247	0252	0257	0262	0266	0271	0276	0281
	52			0221	0226	0231	0236	0241	0246	0250	0255	0260	0265	0270	0275	0280
	54			0220	0225	0230	0235	0239	0244	0249	0254	0259	0264	0269	0274	0279
	56			0219	0224	0229	0233	0238	0243	0248	0253	0258	0263	0267	0272	0277
	58			0218	0223	0227	0232	0237	0242	0247	0252	0257	0261	0266	0271	0276
7	0			0217	0222	0226	0231	0236	0241	0246	0251	0255	0260	0265	0270	0275

TABLE XV. Log A.

For correcting Lunar Distances

App Alt of ☽ °	′	44′	45′	46′	47′	48′	49′	50′	51′	52′	53′	54′	55	56′	57′
		REDUCED PARALLAX AND REFRACTION OF ☽													
7	0	0222	0226	0231	0236	0241	0246	0251	0255	0260	0265	0270	0275		
	3	0220	0225	0230	0234	0239	0244	0249	0254	0258	0263	0268	0273		
	6	0218	0223	0228	0233	0238	0242	0247	0252	0257	0261	0266	0271		
	9	0217	0222	0226	0231	0236	0241	0245	0250	0255	0260	0264	0269		
	12	0215	0220	0225	0230	0234	0239	0244	0248	0253	0258	0262	0267		
7	15	0214	0219	0223	0228	0233	0237	0242	0247	0251	0256	0261	0265		
	18	0213	0217	0222	0226	0231	0236	0240	0245	0250	0254	0259	0263		
	21	0211	0216	0220	0225	0230	0234	0239	0243	0248	0253	0257	0262		
	24	0210	0214	0219	0223	0228	0233	0237	0242	0246	0251	0255	0260		
	27	0208	0213	0217	0222	0227	0231	0236	0240	0245	0249	0254	0258		
7	30	0207	0211	0216	0220	0225	0230	0234	0239	0243	0248	0252	0257		
	33	0206	0210	0215	0219	0224	0228	0232	0237	0241	0246	0250	0255		
	36	0204	0209	0213	0218	0222	0227	0231	0235	0240	0244	0249	0253		
	39	0203	0207	0212	0216	0221	0225	0229	0234	0238	0243	0247	0252		
	42	0202	0206	0210	0215	0219	0224	0228	0232	0237	0241	0246	0250		
7	45	0200	0205	0209	0213	0218	0222	0227	0231	0235	0240	0244	0248		
	48	0199	0203	0208	0212	0216	0221	0225	0229	0234	0238	0242	0247		
	51	0198	0202	0206	0211	0215	0219	0224	0228	0232	0237	0241	0245	0249	
	54	0196	0201	0205	0209	0214	0218	0222	0227	0231	0235	0239	0244	0248	
	57	0195	0200	0204	0208	0212	0217	0221	0225	0229	0234	0238	0242	0246	
8	0	0194	0198	0203	0207	0211	0215	0219	0224	0228	0232	0236	0241	0245	
	3	0193	0197	0201	0206	0210	0214	0218	0222	0227	0231	0235	0239	0243	
	6	0192	0196	0200	0204	0208	0213	0217	0221	0225	0229	0233	0238	0242	
	9		0195	0199	0203	0207	0211	0215	0220	0224	0228	0232	0236	0240	
	12		0193	0198	0202	0206	0210	0214	0218	0222	0227	0231	0235	0239	
8	15		0192	0196	0201	0205	0209	0213	0217	0221	0225	0229	0233	0237	
	18		0191	0195	0199	0203	0207	021[illegible]	0216	0220	0224	0228	0232	0736	
	21		0190	0194	0198	0202	0206	0210	0214	0218	0222	0226	0231	0235	
	24		0189	0193	0197	0201	0205	0209	0213	0217	0221	0225	0229	0233	
	27		0188	0192	0196	0200	0204	0208	0212	0216	0220	0224	0228	0232	
8	30		0187	0191	0195	0199	0203	0207	0211	0215	0219	0223	0226	0230	
	33		0186	0190	0193	0197	0201	0205	0209	0213	0217	0221	0225	0229	
	36		0184	0188	0192	0196	0200	0204	0208	0212	0216	0220	0224	0228	
	39		0183	0187	0191	0195	0199	0203	0207	0211	0215	0219	0223	0226	
	42		0182	0186	0190	0194	0198	0202	0206	0210	0214	0217	0221	0225	
8	45		0181	0185	0189	0193	0197	0201	0205	0208	0212	0216	0220	0224	
	48		0180	0184	0188	0192	0196	0200	0203	0207	0211	0215	0219	0223	
	51		0179	0183	0187	0191	0195	0198	0202	0206	0210	0214	0218	0221	
	54		0178	0182	0186	0190	0193	0197	0201	0205	0209	0212	0216	0220	
	57		0177	0181	0185	0189	0192	0196	0200	0204	0208	0211	0215	0219	
9	0		0176	0180	0184	0188	0191	0195	0199	0203	0206	0210	0214	0218	
	3		0175	0179	0183	0186	0190	0194	0198	0201	0205	0209	0213	0216	
	6		0174	0178	0182	0185	0189	0193	0197	0200	0204	0208	0211	0215	
	9		0173	0177	0181	0184	0188	0192	0196	0199	0203	0207	0210	0214	
	12		0172	0176	0180	0183	0187	0191	0194	0198	0202	0206	0209	0213	
9	15		0171	0175	0179	0182	0186	0190	0193	0197	0201	0204	0208	0212	
	18		0170	0174	0178	0181	0185	0189	0192	0196	0200	0203	0207	0211	
	21		0170	0173	0177	0180	0184	0188	0191	0195	0199	0202	0206	0209	
	24			0172	0176	0179	0183	0187	0190	0194	0198	0201	0205	0208	
	27			0171	0175	0179	0182	0186	0189	0193	0196	0200	0204	0207	
9	30			0170	0174	0178	0181	0185	0188	0192	0195	0199	0203	0206	
	33			0170	0173	0177	0180	0184	0187	0191	0194	0198	0201	0205	
	36			0169	0172	0176	0179	0183	0186	0190	0193	0197	0200	0204	
	39			0168	0171	0175	0178	0182	0185	0189	0192	0196	0199	0203	
	42			0167	0170	0174	0177	0181	0184	0188	0191	0195	0198	0202	
9	45			0166	0169	0173	0176	0180	0183	0187	0190	0194	0197	0201	
	48			0165	0169	0172	0176	0179	0182	0186	0189	0193	0196	0200	0203
	51			0164	0168	0171	0175	0178	0182	0185	0188	0192	0195	0199	0202
	54			0163	0167	0170	0174	0177	0181	0184	0187	0191	0194	0198	0201
	57			0163	0166	0169	0173	0176	0180	0183	0186	0190	0193	0197	0200
10	0			0162	0165	0169	0172	0175	0179	0182	0186	0189	0192	0196	0199

TABLE XV. Log A.

For correcting Lunar Distances

App Alt of ☽	46′	47′	48′	49′	50′	51′	52′	53′	54′	55′	56′	57′	58′
	REDUCED PARALLAX AND REFRACTION OF ☽												
° ′													
10 0	0162	0165	0169	0172	0175	0179	0182	0186	0189	0192	0196	0199	
5	0160	0164	0167	0171	0174	0177	0181	0184	0187	0191	0194	0197	
10	0159	0162	0166	0169	0172	0176	0179	0182	0186	0189	0192	0196	
15	0158	0161	0164	0168	0171	0174	0178	0181	0184	0187	0191	0194	
20	0156	0160	0163	0166	0170	0173	0176	0179	0183	0186	0189	0192	
25	0155	0158	0162	0165	0168	0171	0175	0178	0181	0184	0188	0191	
10 30	0154	0157	0160	0164	0167	0170	0173	0177	0180	0183	0186	0189	
35	0153	0156	0159	0162	0166	0169	0172	0175	0178	0181	0185	0188	
40	0151	0155	0158	0161	0164	0167	0171	0174	0177	0180	0183	0186	
45	0150	0153	0157	0160	0163	0166	0169	0172	0175	0179	0182	0185	
50	0149	0152	0155	0158	0162	0165	0168	0171	0174	0177	0180	0183	
55	0148	0151	0154	0157	0160	0163	0167	0170	0173	0176	0179	0182	
11 0	0147	0150	0153	0156	0159	0162	0165	0168	0171	0174	0177	0181	
5	0146	0149	0152	0155	0158	0161	0164	0167	0170	0173	0176	0179	
10		0148	0151	0154	0157	0160	0163	0166	0169	0172	0175	0178	
15		0146	0149	0152	0155	0158	0161	0164	0167	0170	0173	0176	
20		0145	0148	0151	0154	0157	0160	0163	0166	0169	0172	0175	
25		0144	0147	0150	0153	0156	0159	0162	0165	0168	0171	0174	
11 30		0143	0146	0149	0152	0155	0158	0161	0164	0167	0170	0172	
35		0142	0145	0148	0151	0154	0157	0160	0162	0165	0168	0171	
40		0141	0144	0147	0150	0153	0156	0158	0161	0164	0167	0170	
45		0140	0143	0146	0149	0151	0154	0157	0160	0163	0166	0169	
50		0139	0142	0145	0148	0150	0153	0156	0159	0162	0165	0167	
55		0138	0141	0144	0146	0149	0152	0155	0158	0161	0163	0166	
12 0		0137	0140	0143	0145	0148	0151	0154	0157	0159	0162	0165	
5		0136	0139	0142	0144	0147	0150	0153	0156	0158	0161	0164	
10		0135	0138	0141	0143	0146	0149	0152	0154	0157	0160	0163	
15		0134	0137	0140	0142	0145	0148	0151	0153	0156	0159	0162	
20		0133	0136	0139	0141	0144	0147	0150	0152	0155	0158	0160	
25		0132	0135	0138	0140	0143	0146	0148	0151	0154	0157	0159	
12 30		0131	0134	0137	0139	0142	0145	0147	0150	0153	0155	0158	
35		0130	0133	0136	0138	0141	0144	0146	0149	0152	0154	0157	
40		0129	0132	0135	0137	0140	0143	0145	0148	0151	0153	0156	
45		0129	0131	0134	0136	0139	0142	0144	0147	0150	0152	0155	0158
50		0128	0130	0133	0136	0138	0141	0143	0146	0149	0151	0154	0156
55		0127	0129	0132	0135	0137	0140	0142	0145	0148	0150	0153	0155
13 0		0126	0129	0131	0134	0136	0139	0141	0144	0147	0149	0152	0154
5		0125	0128	0130	0133	0135	0138	0141	0143	0146	0148	0151	0153
10		0124	0127	0129	0132	0135	0137	0140	0142	0145	0147	0150	0152
15		0123	0126	0129	0131	0134	0136	0139	0141	0144	0146	0149	0151
20		0123	0125	0128	0130	0133	0135	0138	0140	0143	0145	0148	0150
25		0122	0124	0127	0129	0132	0134	0137	0139	0142	0144	0147	0149
13 30		0121	0124	0126	0129	0131	0133	0136	0138	0141	0143	0146	0148
35		0120	0123	0125	0128	0130	0133	0135	0138	0140	0142	0145	0147
40		0120	0122	0124	0127	0129	0132	0134	0137	0139	0142	0144	0146
45			0121	0124	0126	0128	0131	0133	0136	0138	0141	0143	0145
50			0120	0123	0125	0128	0130	0132	0135	0137	0140	0142	0145
55			0120	0122	0124	0127	0129	0132	0134	0136	0139	0141	0144
14 0			0119	0121	0124	0126	0128	0131	0133	0136	0138	0140	0143
5			0118	0121	0123	0125	0128	0130	0132	0135	0137	0139	0142
10			0117	0120	0122	0124	0127	0129	0132	0134	0136	0139	0141
15			0117	0119	0121	0124	0126	0128	0131	0133	0135	0138	0140
20			0116	0118	0121	0123	0125	0128	0130	0132	0135	0137	0139
25			0115	0118	0120	0122	0124	0127	0129	0131	0134	0136	0138
14 30			0114	0117	0119	0121	0124	0126	0128	0131	0133	0135	0137
35			0114	0116	0118	0121	0123	0125	0128	0130	0132	0134	0137
40			0113	0115	0118	0120	0122	0124	0127	0129	0131	0134	0136
45			0112	0115	0117	0119	0121	0124	0126	0128	0130	0133	0135
50			0112	0114	0116	0118	0121	0123	0125	0127	0130	0132	0134
55			0111	0113	0116	0118	0120	0122	0124	0127	0129	0131	0133
15 0			0110	0113	0115	0117	0119	0121	0124	0126	0128	0130	0133

TABLE XV. Log A.

For correcting Lunar Distances

App Alt of ☽	REDUCED PARALLAX AND REFRACTION OF ☽											
	48′	49′	50′	51′	52′	53′	54′	55′	56′	57′	58′	59′
° ′												
15 0	0110	0113	0115	01.7	0119	0121	0124	0126	0128	0130	0133	
10	0109	0111	0113	0116	0118	0120	0122	0124	0127	0129	0131	
20	0108	0110	0112	0114	0116	0119	0121	0123	0125	0127	0129	
30	0107	0109	0111	0113	0115	0117	0119	0121	0124	0126	0128	
40	0105	0107	0110	0112	0114	0116	0118	0120	0122	0124	0126	
50	0104	0106	0108	0110	0112	0115	0117	0119	0121	0123	0125	
16 0	0103	0105	0107	0109	0111	0113	0115	0117	0119	0121	0124	
10	0102	0104	0106	0108	0110	0112	0114	0116	0118	0120	0122	
20	0101	0103	0105	0107	0109	0111	0113	0115	0117	0119	0121	
30	0100	0102	0103	0105	0107	0109	0111	0113	0115	0117	0119	
40	0098	0100	0102	0104	0106	0108	0110	0112	0114	0116	0118	
50	0097	0099	0101	0103	0105	0107	0109	0111	0113	0115	0117	
17 0	0096	0098	0100	0102	0104	0106	0108	0110	0112	0114	0116	
10	0095	0097	0099	0101	0103	0105	0107	0109	0110	0112	0114	
20	0094	0096	0098	0100	0102	0104	0106	0107	0109	0111	0113	
30		0095	0097	0099	0101	0103	0104	0106	0108	0110	0112	
40		0094	0096	0098	0100	0101	0103	0105	0107	0109	0111	
50		0093	0095	0097	0099	0100	0102	0104	0106	0108	0109	
18 0		0092	0094	0096	0098	0099	0101	0103	0105	0107	0108	
10		0091	0093	0095	0097	0098	0100	0102	0104	0105	0107	0109
20		0090	0092	0094	0096	0097	0099	0101	0103	0104	0106	0108
30		0089	0091	0093	0095	0096	0098	0100	0102	0103	0105	0107
40		0088	0090	0092	0094	0095	0097	0099	0101	0102	0104	0106
50		0088	0089	0091	0093	0094	0096	0098	0099	0101	0103	0105
19 0		0087	0088	0090	0092	0093	0095	0097	0098	0100	0102	0104
10		0086	0087	0089	0091	0092	0094	0096	0098	0099	0101	0103
20		0085	0087	0088	0090	0092	0093	0095	0097	0098	0100	0102
30		0084	0086	0087	0089	0091	0092	0094	0096	0097	0099	0101
40		0083	0085	0087	0088	0090	0091	0093	0095	0096	0098	0100
50		0082	0084	0086	0087	0089	0090	0092	0094	0095	0097	0099
20 0		0082	0083	0085	0086	0088	0090	0091	0093	0094	0096	0098
10		0081	0082	0084	0086	0087	0089	0090	0092	0093	0095	0097
20		0080	0082	0083	0085	0086	0088	0089	0091	0093	0094	0096
30		0079	0081	0082	0084	0086	0087	0089	0090	0092	0093	0095
40		0079	0080	0082	0083	0085	0086	0088	0089	0091	0092	0094
50		0078	0079	0081	0082	0084	0085	0087	0088	0090	0091	0093
21 0		0077	0079	0080	0082	0083	0085	0086	0088	0089	0091	0092
10		0076	0078	0079	0081	0082	0084	0085	0087	0088	0090	0091
20		0076	0077	0079	0080	0082	0083	0085	0086	0087	0089	0090
30		0075	0076	0078	0079	0081	0082	0084	0085	0087	0088	0090
40		0074	0076	0077	0079	0080	0082	0083	0084	0086	0087	0089
50		0074	0075	0076	0078	0079	0081	0082	0084	0085	0086	0088
22 0		0073	0074	0076	0077	0079	0080	0081	0083	0084	0086	0087
10		0072	0074	0075	0076	0078	0079	0081	0082	0083	0085	0086
20		0072	0073	0074	0076	0077	0079	0080	0081	0083	0084	0086
30		0071	0072	0074	0075	0076	0078	0079	0081	0082	0083	0085
40		0070	0072	0073	0074	0076	0077	0079	0080	0081	0083	0084
50		0070	0071	0072	0074	0075	0076	0078	0079	0081	0082	0083
23 0		0069	0070	0072	0073	0074	0076	0077	0078	0080	0081	0082
10		0068	0070	0071	0072	0074	0075	0076	0078	0079	0080	0082
20		0068	0069	0070	0072	0073	0074	0076	0077	0078	0080	0081
30		0067	0069	0070	0071	0072	0074	0075	0076	0078	0079	0080
40		0067	0068	0069	0071	0072	0073	0074	0076	0077	0078	0080
50		0066	0067	0069	0070	0071	0073	0074	0075	0076	0078	0079
24 0			0067	0068	0069	0071	0072	0073	0074	0076	0077	0078
10			0066	0067	0069	0070	0071	0073	0074	0075	0076	0078
20			0066	0067	0068	0069	0071	0072	0073	0074	0076	0077
30			0065	0066	0068	0069	0070	0071	0072	0074	0075	0076
40			0065	0066	0067	0068	0069	0071	0072	0073	0074	0076
50			0064	0065	0066	0068	0069	0070	0071	0072	0074	0075
25 0			0063	0065	0066	0067	0068	0069	0071	0072	0073	0074

TABLE XV. Log A.

For correcting Lunar Distances

App Alt of ☽		REDUCED PARALLAX AND REFRACTION OF ☽										
°	′	50′	51′	52′	53′	54′	55′	56′	57′	58′	59′	60′
25	0	0063	0065	0066	0067	0068	0069	0071	0072	0073	0074	
	20	0062	0064	0065	0066	0067	0068	0069	0071	0072	0073	
	40	0061	0062	0064	0065	0066	0067	0068	0069	0071	0072	
26	0	0060	0061	0063	0064	0065	0066	0067	0068	0069	0071	
	20	0059	0060	0062	0063	0064	0065	0066	0067	0068	0069	
	40	0058	0059	0061	0062	0063	0064	0065	0066	0067	0068	
27	0	0057	0058	0060	0061	0062	0063	0064	0065	0066	0067	
	20	0056	0057	0059	0060	0061	0062	0063	0064	0065	0066	
	40	0055	0057	0058	0059	0060	0061	0062	0063	0064	0065	
28	0	0055	0056	0057	0058	0059	0060	0061	0062	0063	0064	
	20	0054	0055	0056	0057	0058	0059	0060	0061	0062	0063	
	40	0053	0054	0055	0056	0057	0058	0059	0060	0061	0062	
29	0	0052	0053	0054	0055	0056	0057	0058	0059	0060	0061	
	20	0051	0052	0053	0054	0055	0056	0057	0058	0059	0060	
	40	0050	0051	0052	0053	0054	0055	0056	0057	0058	0059	
30	0	0050	0051	0051	0052	0053	0054	0055	0056	0057	0058	
	20	0049	0050	0051	0052	0052	0053	0054	0055	0056	0057	
	40	0048	0049	0050	0051	0052	0053	0053	0054	0055	0056	
31	0	0047	0048	0049	0050	0051	0052	0053	0053	0054	0055	
	20	0047	0047	0048	0049	0050	0051	0052	0053	0054	0054	0055
	40	0046	0047	0048	0048	0049	0050	0051	0052	0053	0054	0054
32	0	0045	0046	0047	0048	0048	0049	0050	0051	0052	0053	0054
	20	0044	0045	0046	0047	0048	0049	0049	0050	0051	0052	0053
	40	0044	0045	0045	0046	0047	0048	0049	0049	0050	0051	0052
33	0	0043	0044	0045	0045	0046	0047	0048	0049	0049	0050	0051
	20	0042	0043	0044	0045	0046	0046	0047	0048	0049	0050	0050
	40	0042	0043	0043	0044	0045	0046	0046	0047	0048	0049	0050
34	0	0041	0042	0043	0043	0044	0045	0046	0046	0047	0048	0049
	20	0040	0041	0042	0043	0043	0044	0045	0046	0047	0047	0048
	40	0040	0041	0041	0042	0043	0044	0044	0045	0046	0047	0047
35	0	0039	0040	0041	0041	0042	0043	0044	0044	0045	0046	0047
	20	0039	0039	0040	0041	0042	0042	0043	0044	0044	0045	0046
	40	0038	0039	0039	0040	0041	0042	0042	0043	0044	0044	0045
36	0	0037	0038	0039	0040	0040	0041	0042	0042	0043	0044	0044
	20	0037	0038	0038	0039	0040	0040	0041	0042	0042	0043	0044
	40	0036	0037	0038	0038	0039	0040	0040	0041	0042	0042	0043
37	0	0036	0036	0037	0038	0038	0039	0040	0040	0041	0042	0042
	20	0035	0036	0037	0037	0038	0039	0039	0040	0040	0041	0042
	40	0035	0035	0036	0037	0037	0038	0039	0039	0040	0040	0041
38	0	0034	0035	0035	0036	0037	0037	0038	0039	0039	0040	0040
	20	0034	0034	0035	0036	0036	0037	0037	0038	0039	0039	0040
	40	0033	0034	0034	0035	0036	0036	0037	0037	0038	0039	0039
39	0		0033	0034	0034	0035	0036	0036	0037	0037	0038	0039
	20		0033	0033	0034	0035	0035	0036	0036	0037	0037	0038
	40		0032	0033	0033	0034	0035	0035	0036	0036	0037	0037
40	0		0032	0032	0033	0033	0034	0035	0035	0036	0036	0037
	20		0031	0032	0032	0033	0034	0034	0035	0035	0036	0036
	40		0031	0031	0032	0032	0033	0034	0034	0035	0035	0036
41	0		0030	0031	0031	0032	0033	0033	0034	0034	0035	0035
	20		0030	0030	0031	0031	0032	0033	0033	0034	0034	0035
	40		0029	0030	0030	0031	0032	0032	0033	0033	0034	0034
42	0		0029	0029	0030	0031	0031	0032	0032	0033	0033	0034
	20		0029	0029	0030	0030	0031	0031	0032	0032	0033	0033
	40		0028	0029	0029	0030	0030	0031	0031	0032	0032	0033
43	0		0028	0028	0029	0029	0030	0030	0031	0031	0032	0032
	20		0027	0028	0028	0029	0029	0030	0030	0031	0031	0032
	40		0027	0027	0028	0028	0029	0029	0030	0030	0031	0031
44	0		0026	0027	0027	0028	0028	0029	0029	0030	0030	0031
	20		0026	0026	0027	0027	0028	0028	0029	0029	0030	0030
	40		0026	0026	0026	0027	0027	0028	0028	0029	0029	0030
45	0		0025	0026	0026	0027	0027	0027	0028	0028	0029	0029

TABLE XV. Log A.

For correcting Lunar Distances

App Alt of ☽	51′	52′	53′	54′	55′	56′	57′	58′	59′	60′
° ′	REDUCED PARALLAX AND REFRACTION OF ☽									
45 0	0025	0026	0026	0027	0027	0027	0028	0028	0029	0029
30	0025	0025	0025	0026	0026	0027	0027	0028	0028	0028
46 0	0024	0024	0025	0025	0026	0026	0027	0027	0027	0028
30	0023	0024	0024	0025	0025	0026	0026	0026	0027	0027
47 0	0023	0023	0024	0024	0025	0025	0025	0026	0026	0026
30	0022	0023	0023	0024	0024	0024	0025	0025	0025	0026
48 0	0022	0022	0023	0023	0023	0024	0024	0024	0025	0025
30	0021	0022	0022	0022	0023	0023	0024	0024	0024	0025
49 0	0021	0021	0022	0022	0022	0023	0023	0023	0024	0024
30	0020	0021	0021	0021	0022	0022	0022	0023	0023	0023
50 0	0020	0020	0020	0021	0021	0022	0022	0022	0023	0023
30	0019	0020	0020	0020	0021	0021	0021	0022	0022	0022
51 0	0019	0019	0020	0020	0020	0020	0021	0021	0021	0022
30	0018	0019	0019	0019	0020	0020	0020	0021	0021	0021
52 0	0018	0018	0019	0019	0019	0019	0020	0020	0020	0021
30	0018	0018	0018	0018	0019	0019	0019	0020	0020	0020
53 0	0017	0017	0018	0018	0018	0018	0019	0019	0019	0020
30	0017	0017	0017	0017	0018	0018	0018	0019	0019	0019
54 0	0016	0016	0017	0017	0017	0018	0018	0018	0018	0019
30	0016	0016	0016	0017	0017	0017	0017	0018	0018	0018
55 0	0015	0016	0016	0016	0016	0017	0017	0017	0017	0018
30	0015	0015	0015	0016	0016	0016	0016	0017	0017	0017
56 0	0015	0015	0015	0015	0016	0016	0016	0016	0017	0017
30	0014	0014	0015	0015	0015	0015	0016	0016	0016	0016
57 0	0014	0014	0014	0015	0015	0015	0015	0015	0016	0016
30	0014	0014	0014	0014	0014	0015	0015	0015	0015	0015
58 0	0013	0013	0014	0014	0014	0014	0014	0015	0015	0015
30	0013	0013	0013	0013	0014	0014	0014	0014	0014	0015
59 0	0012	0013	0013	0013	0013	0013	0014	0014	0014	0014
30	0012	0012	0012	0013	0013	0013	0013	0013	0014	0014
60	0012	0012	0012	0012	0013	0013	0013	0013	0013	0013
61	0011	0011	0011	0012	0012	0012	0012	0012	0012	0013
62	0011	0011	0011	0011	0011	0011	0011	0012	0012	0012
63	0010	0010	0010	0010	0011	0011	0011	0011	0011	0011
64	0009	0010	0010	0010	0010	0010	0010	0010	0010	0011
65	0009	0009	0009	0009	0009	0009	0010	0010	0010	0010
66	0008	0008	0009	0009	0009	0009	0009	0009	0009	0009
67	0008	0008	0008	0008	0008	0008	0008	0009	0009	0009
68	0007	0007	0008	0008	0008	0008	0008	0008	0008	0008
69	0007	0007	0007	0007	0007	0007	0007	0008	0008	0008
70	0007	0007	0007	0007	0007	0007	0007	0007	0007	0007
71	0006	0006	0006	0006	0006	0007	0007	0007	0007	0007
72	0006	0006	0006	0006	0006	0006	0006	0006	0006	0006
73	0005	0005	0006	0006	0006	0006	0006	0006	0006	0006
74	0005	0005	0005	0005	0005	0005	0005	0005	0005	0006
75	0005	0005	0005	0005	0005	0005	0005	0005	0005	0005
76	0004	0005	0005	0005	0005	0005	0005	0005	0005	0005
77	0004	0004	0004	0004	0004	0004	0004	0004	0004	0004
78	0004	0004	0004	0004	0004	0004	0004	0004	0004	0004
79	0004	0004	0004	0004	0004	0004	0004	0004	0004	0004
80	0004	0004	0004	0004	0004	0004	0004	0004	0004	0004
81	0003	0003	0003	0003	0003	0003	0003	0003	0003	0003
82	0003	0003	0003	0003	0003	0003	0003	0003	0003	0003
83	0003	0003	0003	0003	0003	0003	0003	0003	0003	0003
84	0003	0003	0003	0003	0003	0003	0003	0003	0003	0003
85	0003	0003	0003	0003	0003	0003	0003	0003	0003	0003
86	0003	0003	0003	0003	0003	0003	0003	0003	0003	0003
87	0003	0003	0003	0003	0003	0003	0003	0003	0003	0003
88	0003	0003	0003	0003	0003	0003	0003	0003	0003	0003
89	0003	0003	0003	0003	0003	0003	0003	0003	0003	0003
90	0003	0003	0003	0003	0003	0003	0003	0003	0003	0003

TABLE XV. Log B.

For Correcting Lunar Distances

App Alt of ☉ or *	REDUCED REFRACTION AND PARALLAX OF ☉ OR *											
	0′ 0″	0′ 30″	1′ 0″	1′ 30″	2′ 0″	2′ 30″	3′ 0″	3′ 30″	4′ 0″	4′ 30″	5′ 0″	5′ 30″
5° 0′												
10												
20												
30												
40												
50												
6 0												
20												9 9970
40												9 9972
7 0											9 9976	9 9974
20											9 9977	9 9975
40										9 9981	9 9978	9 9976
8 0										9 9982	9 9979	9 9977
20										9 9982	9 9980	9 9978
40										9 9983	9 9981	9 9979
9 0									9 9986	9 9984	9 9982	9 9980
20									9 9986	9 9985	9 9983	9 9981
40									9 9987	9 9985	9 9983	9 9982
10 0								9 9989	9 9988	9 9986	9 9984	9 9982
11							9 9992	9 9991	9 9989	9 9987	9 9986	9 9984
12							9 9993	9 9992	9 9990	9 9989	9 9987	9 9986
13						9 9995	9 9994	9 9992	9 9991	9 9990	9 9989	9 9987
14						9 9995	9 9994	9 9993	9 9992	9 9991	9 9990	
15					9 9997	9 9996	9 9995	9 9994	9 9993	9 9992	9 9991	
16					9 9997	9 9996	9 9995	9 9994	9 9993	9 9993		
18				9 9990	9 9998	9 9997	9 9996	9 9995	9 9995			
20			0 0000	9 9999	9 9998	9 9998	9 9997	9 9996	9 9996			
25			0 0000	0 0000	9 9999	9 9999	9 9998	9 9998				
30		0 0001	0 0001	0 0000	0 0000	0 0000	9 9999					
50	0 0001	0 0001	0 0001	0 0001	0 0001	0 0001						
90	0 0001	0 0002	0 0002	0 0002								

Log C.

App Alt of ☉ or *	REDUCED REFRACTION AND PARALLAX OF ☉ OR *											
	0′ 0″	0′ 30″	1′ 0″	1′ 30″	2′ 0″	2′ 30″	3′ 0″	3′ 30″	4′ 0″	4′ 30″	5′ 0″	5′ 30″
5° 0′												
20												
40												
6 0												
20												9 9969
40												9 9970
7 0											9 9974	9 9972
8										9 9980	9 9978	9 9975
9									9 9984	9 9982	9 9980	9 9978
10								9 9988	9 9986	9 9984	9 9982	9 9981
11							9 9990	9 9989	9 9987	9 9986	9 9984	9 9982
12							9 9991	9 9990	9 9988	9 9987	9 9985	9 9984
13						9 9993	9 9992	9 9991	9 9989	9 9988	9 9987	9 9985
14						9 9994	9 9993	9 9991	9 9990	9 9989	9 9988	
15					9 9995	9 9994	9 9993	9 9992	9 9991	9 9990	9 9989	
16					9 9996	9 9995	9 9994	9 9993	9 9992	9 9990		
17					9 9996	9 9995	9 9994	9 9993	9 9992	9 9991		
18				9 9997	9 9996	9 9995	9 9994	9 9994	9 9993			
20			9 9998	9 9998	9 9997	9 9996	9 9995	9 9994	9 9993			
25			9 9999	9 9998	9 9998	9 9997	9 9996	9 9996				
30		0 0000	9 9999	9 9999	9 9998	9 9998	9 9997					
40		0 0000	9 9999	9 9999	9 9999	9 9999						
50	0 0000	0 0000	0 0000	9 9999	9 9999							
90	0 0000	0 0000	0 0000	0 0000								

TABLE XV. Log B.

For Correcting Lunar Distances.

App Alt of ○ or ✱	REDUCED REFRACTION AND PARALLAX OF ○ OR ✱											
	6′ 0″	6′ 30″	7′ 0″	7′ 30″	8′ 0″	8′ 30″	9′ 0″	9′ 30″	10′ 0″	10′ 30″	11′ 0″	11′ 30″
5° 0′			9 9951	9 9947	9 9944	9 9940	9 9937	9 9933	9 9929	9 9926	9 9922	9 9919
10			9 9953	9 9949	9 9946	9 9942	9 9939	9 9935	9 9932	9 9928	9 9925	9 9921
20			9 9954	9 9951	9 9948	9 9944	9 9941	9 9937	9 9934	9 9931	9 9927	9 9924
30		9 9959	9 9956	9 9952	9 9949	9 9946	9 9943	9 9939	9 9936	9 9933	9 9929	
40		9 9960	9 9957	9 9954	9 9951	9 9948	9 9944	9 9941	9 9938	9 9935	9 9932	
50	9 9965	9 9962	9 9958	9 9955	9 9952	9 9949	9 9946	9 9943	9 9940	9 9937		
6 0	9 9966	9 9963	9 9960	9 9957	9 9954	9 9951	9 9948	9 9945	9 9942	9 9939		
20	9 9968	9 9965	9 9962	9 9959	9 9956	9 9954	9 9951	9 9948	9 9945			
40	9 9969	9 9967	9 9964	9 9961	9 9959	9 9956	9 9953	9 9951	9 9948			
7 0	9 9971	9 9968	9 9966	9 9963	9 9961	9 9958	9 9956	9 9953				
20	9 9972	9 9970	9 9968	9 9965	9 9963	9 9960	9 9958					
40	9 9974	9 9971	9 9969	9 9967	9 9965	9 9962						
8 0	9 9975	9 9973	9 9971	9 9968	9 9966	9 9964						
20	9 9976	9 9974	9 9972	9 9970	9 9968							
40	9 9977	9 9975	9 9973	9 9971								
9 0	9 9978	9 9976	9 9974	9 9972								
20	9 9979	9 9977	9 9975									
40	9 9980	9 9978	9 9976									
10 0	9 9981	9 9979	9 9977									
11	9 9983	9 9981										
12	9 9985											
13												
14												
15												
16												
18												
20												
25												
30												
50												
90												

Log C.

App Alt of ○ or ✱	REDUCED REFRACTION AND PARALLAX OF ○ OR ✱											
	6′ 0″	6′ 30″	7′ 0″	7′ 30″	8′ 0″	8′ 30″	9′ 0″	9′ 30″	10′ 0″	10′ 30″	11′ 0″	11′ 30″
5° 0′			9 9949	9 9946	9 9942	9 9938	9 9935	9 9931	9 9927	9 9924	9 9920	9 9916
20		9 9956	9 9953	9 9949	9 9946	9 9942	9 9939	9 9936	9 9932	9 9929	9 9925	9 9922
40	9 9962	9 9959	9 9955	9 9952	9 9949	9 9946	9 9943	9 9939	9 9936	9 9933	9 9930	
6 0	9 9964	9 9961	9 9958	9 9955	9 9952	9 9949	9 9946	9 9943	9 9940	9 9937		
20	9 9966	9 9963	9 9960	9 9957	9 9955	9 9952	9 9949	9 9946	9 9943			
40	9 9968	9 9965	9 9962	9 9960	9 9957	9 9954	9 9951	9 9949	9 9946			
7 0	9 9969	9 9967	9 9964	9 9962	9 9959	9 9956	9 9954	9 9951				
8	9 9973	9 9971	9 9969	9 9966	9 9964	9 9962	9 9960					
9	9 9976	9 9974	9 9972	9 9970	9 9968							
10	9 9979	9 9977	9 9975									
11	9 9981	9 9979										
12	9 9983											
13												
14												
15												
16												
17												
18												
20												
25												
30												
40												
50												
90												

TABLE XV. Log D.

For correcting Lunar Distances.

App Alt of D		REDUCED PARALLAX AND REFRACTION OF D														
°	′	41′	42′	43′	44′	45′	46′	47′	48′	49′	50	51′	52′	53′	54′	55′
5	0	0283	0290	0296	0303	0310	0316	0323	0329	0336	0343	0349	0356	0362	0369	
	3	0280	0287	0293	0300	0307	0313	0320	0326	0333	0339	0346	0352	0359	0365	
	6	0277	0284	0291	0297	0304	0310	0317	0323	0330	0336	0342	0349	0355	0362	
	9	0275	0281	0288	0294	0301	0307	0313	0320	0326	0333	0339	0345	0352	0358	
	12	0272	0279	0285	0291	0298	0304	0310	0317	0323	0330	0336	0342	0349	0355	
5	15	0270	0276	0282	0289	0295	0301	0308	0314	0320	0326	0333	0339	0345	0351	
	18	0267	0273	0280	0286	0292	0298	0305	0311	0317	0323	0330	0336	0342	0348	
	21	0264	0271	0277	0283	0289	0296	0302	0308	0314	0320	0327	0333	0339	0345	
	24	0262	0268	0274	0281	0287	0293	0299	0305	0311	0317	0324	0330	0336	0342	
	27	0260	0266	0272	0278	0284	0290	0296	0302	0308	0314	0321	0327	0333	0339	
5	30	0257	0263	0269	0275	0282	0288	0294	0300	0306	0312	0318	0324	0330	0336	
	33	0255	0261	0267	0273	0279	0285	0291	0297	0303	0309	0315	0321	0327	0333	
	36	0253	0259	0265	0271	0276	0282	0288	0294	0300	0306	0312	0318	0324	0330	
	39		0256	0262	0268	0274	0280	0286	0292	0298	0303	0309	0315	0321	0327	
	42		0254	0260	0266	0272	0277	0283	0289	0295	0301	0306	0312	0318	0324	
5	45		0252	0258	0263	0269	0275	0281	0287	0292	0298	0304	0310	0315	0321	
	48		0250	0255	0261	0267	0273	0278	0284	0290	0295	0301	0307	0313	0318	
	51		0247	0253	0259	0265	0270	0276	0282	0287	0293	0299	0304	0310	0316	
	54		0245	0251	0257	0262	0268	0274	0279	0285	0290	0296	0302	0307	0313	
	57		0243	0249	0254	0260	0266	0271	0277	0282	0288	0294	0299	0305	0310	
6	0		0241	0247	0252	0258	0263	0269	0275	0280	0286	0291	0297	0302	0308	
	3		0239	0245	0250	0256	0261	0267	0272	0278	0283	0289	0294	0300	0305	
	6		0237	0243	0248	0254	0259	0265	0270	0275	0281	0286	0292	0297	0302	
	9		0235	0241	0246	0252	0257	0262	0268	0273	0279	0284	0289	0295	0300	
	12		0233	0239	0244	0249	0255	0260	0266	0271	0276	0282	0287	0292	0298	
6	15		0231	0237	0242	0247	0253	0258	0263	0269	0274	0279	0285	0290	0295	
	18		0230	0235	0240	0245	0251	0256	0261	0267	0272	0277	0282	0288	0293	
	21		0228	0233	0238	0243	0249	0254	0259	0264	0270	0275	0280	0285	0290	
	24		0226	0231	0236	0242	0247	0252	0257	0262	0267	0273	0278	0283	0288	
	27			0229	0234	0240	0245	0250	0255	0260	0265	0271	0276	0281	0286	0291
6	30			0227	0233	0238	0243	0248	0253	0258	0263	0268	0274	0279	0284	0289
	33			0226	0231	0236	0241	0246	0251	0256	0261	0266	0271	0276	0281	0287
	36			0224	0229	0234	0239	0244	0249	0254	0259	0264	0269	0274	0279	0284
	39			0222	0227	0232	0237	0242	0247	0252	0257	0262	0267	0272	0277	0282
	42			0220	0225	0230	0235	0240	0245	0250	0255	0260	0265	0270	0275	0280
6	45			0219	0224	0229	0234	0239	0244	0248	0253	0258	0263	0268	0273	0278
	48			0217	0222	0227	0232	0237	0242	0247	0251	0256	0261	0266	0271	0276
	51			0216	0220	0225	0230	0235	0240	0245	0250	0254	0259	0264	0269	0274
	54			0214	0219	0224	0228	0233	0238	0243	0248	0253	0257	0262	0267	0272
	57			0212	0217	0222	0227	0232	0236	0241	0246	0251	0255	0260	0265	0270
7	0			0211	0216	0220	0225	0230	0235	0239	0244	0249	0254	0258	0263	0268
	3			0209	0214	0219	0223	0228	0233	0238	0242	0247	0252	0256	0261	0266
	6			0208	0212	0217	0222	0227	0231	0236	0241	0245	0250	0255	0259	0264
	9				0211	0216	0220	0225	0230	0234	0239	0243	0248	0253	0257	0262
	12				0209	0214	0219	0223	0228	0232	0237	0242	0246	0251	0255	0260
7	15				0208	0212	0217	0222	0226	0231	0235	0240	0245	0249	0254	0258
	18				0206	0211	0216	0220	0225	0229	0234	0238	0243	0247	0252	0256
	21				0205	0209	0214	0219	0223	0228	0232	0237	0241	0246	0250	0255
	24				0204	0208	0213	0217	0222	0226	0230	0235	0239	0244	0248	0253
	27				0202	0207	0211	0216	0220	0224	0229	0233	0238	0242	0247	0251
7	30				0201	0205	0210	0214	0218	0223	0227	0232	0236	0241	0245	0249
	33				0199	0204	0208	0213	0217	0221	0226	0230	0234	0239	0243	0248
	36				0198	0202	0207	0211	0215	0220	0224	0229	0233	0237	0242	0246
	39				0197	0201	0205	0210	0214	0218	0223	0227	0231	0236	0240	0244
	42				0195	0200	0204	0208	0213	0217	0221	0225	0230	0234	0238	0243
7	45				0194	0198	0203	0207	0211	0215	0220	0224	0228	0232	0237	0241
	48				0193	0197	0201	0205	0210	0214	0218	0222	0227	0231	0235	0239
	51				0191	0196	0200	0204	0208	0213	0217	0221	0225	0229	0234	0238
	54				0190	0194	0198	0203	0207	0211	0215	0219	0224	0228	0232	0236
	57				0189	0193	0197	0201	0206	0210	0214	0218	0222	0226	0230	0235
8	0				0188	0192	0196	0200	0204	0208	0212	0217	0221	0225	0229	0233

TABLE XV. Log D.

For correcting Lunar Distances.

App Alt of ☽	REDUCED PARALLAX AND REFRACTION OF ☽													
° ′	45′	46′	47′	48′	49′	50′	51′	52′	53′	54′	55′	56′	57′	58′	
8 0	0192	0196	0200	0204	0208	0212	0217	0221	0225	0229	0233	0237			
5	0190	0194	0198	0202	0206	0210	0214	0218	0222	0227	0231	0235			
10	0188	0192	0196	0200	0204	0208	0212	0216	0220	0224	0228	0232			
15	0186	0190	0194	0198	0202	0206	0210	0214	0218	0222	0226	0230			
20	0184	0188	0192	0196	0200	0204	0207	0211	0215	0219	0223	0227			
25	0182	0186	0190	0194	0197	0201	0205	0209	0213	0217	0221	0225			
8 30	0180	0184	0188	0192	0195	0199	0203	0207	0211	0215	0219	0223			
35	0178	0182	0186	0190	0193	0197	0201	0205	0209	0213	0216	0220			
40	0176	0180	0184	0188	0191	0195	0199	0203	0207	0210	0214	0218			
45	0174	0178	0182	0186	0189	0193	0197	0201	0205	0208	0212	0216			
50	0173	0176	0180	0184	0188	0191	0195	0199	0202	0206	0210	0214			
55	0171	0175	0178	0182	0186	0189	0193	0197	0200	0204	0208	0212			
9 0	0169	0173	0177	0180	0184	0188	0191	0195	0198	0202	0206	0209			
5	0167	0171	0175	0178	0182	0186	0189	0193	0197	0200	0204	0207			
10	0166	0169	0173	0177	0180	0184	0187	0191	0195	0198	0202	0205			
15	0164	0168	0171	0175	0179	0182	0186	0189	0193	0196	0200	0203			
20	0163	0166	0170	0173	0177	0180	0184	0187	0191	0194	0198	0201			
25	0161	0165	0168	0172	0175	0179	0182	0186	0189	0193	0196	0199			
9 30		0163	0166	0170	0173	0177	0180	0184	0187	0191	0194	0198			
35		0161	0165	0168	0172	0175	0179	0182	0185	0189	0192	0196			
40		0160	0163	0167	0170	0174	0177	0180	0184	0187	0191	0194			
45		0158	0162	0165	0169	0172	0175	0179	0182	0185	0189	0192	0195		
50		0157	0160	0164	0167	0170	0174	0177	0180	0184	0187	0190	0194		
55		0156	0159	0162	0165	0169	0172	0175	0179	0182	0185	0189	0192		
10 0		0154	0157	0161	0164	0167	0171	0174	0177	0180	0184	0187	0190		
5		0153	0156	0159	0162	0166	0169	0172	0175	0179	0182	0185	0188		
10		0151	0155	0158	0161	0164	0167	0171	0174	0177	0180	0183	0187		
15		0150	0153	0156	0160	0163	0166	0169	0172	0175	0179	0182	0185		
20		0149	0152	0155	0158	0161	0164	0168	0171	0174	0177	0180	0183		
25		0147	0150	0154	0157	0160	0163	0166	0169	0172	0175	0179	0182		
10 30		0146	0149	0152	0155	0158	0162	0165	0168	0171	0174	0177	0180		
35		0145	0148	0151	0154	0157	0160	0163	0166	0169	0172	0175	0179		
40		0143	0147	0150	0153	0156	0159	0162	0165	0168	0171	0174	0177		
45		0142	0145	0148	0151	0154	0157	0160	0163	0166	0169	0172	0175		
50		0141	0144	0147	0150	0153	0156	0159	0162	0165	0168	0171	0174		
55		0140	0143	0146	0149	0152	0155	0158	0161	0164	0167	0170	0172		
11 0		0139	0142	0145	0147	0150	0153	0156	0159	0162	0165	0168	0171		
5		0137	0140	0143	0146	0149	0152	0155	0158	0161	0164	0167	0170		
10			0139	0142	0145	0148	0151	0154	0157	0159	0162	0165	0168		
15			0138	0141	0144	0147	0150	0152	0155	0158	0161	0164	0167		
20			0137	0140	0143	0145	0148	0151	0154	0157	0160	0163	0165		
25			0136	0139	0141	0144	0147	0150	0153	0156	0158	0161	0164		
11 30			0135	0137	0140	0143	0146	0149	0151	0154	0157	0160	0163		
35			0133	0136	0139	0142	0145	0147	0150	0153	0156	0159	0161		
40			0132	0135	0138	0141	0143	0146	0149	0152	0154	0157	0160		
45			0131	0134	0137	0140	0142	0145	0148	0150	0153	0156	0159		
50			0130	0133	0136	0138	0141	0144	0147	0149	0152	0155	0157		
55			0129	0132	0135	0137	0140	0143	0145	0148	0151	0153	0156		
12 0			0128	0131	0134	0136	0139	0142	0144	0147	0150	0152	0155		
5			0127	0130	0132	0135	0138	0140	0143	0146	0148	0151	0154		
10			0126	0129	0131	0134	0137	0139	0142	0145	0147	0150	0152		
15			0125	0128	0130	0133	0136	0138	0141	0143	0146	0149	0151		
20			0124	0127	0129	0132	0135	0137	0140	0142	0145	0147	0150		
25			0123	0126	0128	0131	0133	0136	0139	0141	0144	0146	0149		
12 30			0122	0125	0127	0130	0132	0135	0138	0140	0143	0145	0148		
35			0121	0124	0126	0129	0131	0134	0136	0139	0141	0144	0147		
40			0120	0123	0125	0128	0130	0133	0135	0138	0140	0143	0145		
45			0119	0122	0124	0127	0129	0132	0134	0137	0139	0142	0144	0147	
50			0118	0121	0123	0126	0128	0131	0133	0136	0138	0141	0143	0146	
55			0118	0120	0123	0125	0127	0130	0132	0135	0137	0140	0142	0145	
13 0			0117	0119	0122	0124	0126	0129	0131	0134	0136	0139	0141	0143	

TABLE XV. Log D.

For correcting Lunar Distances.

App Alt of ☽	47′	48′	49′	50′	51′	52′	53	54′	55′	56′	57′	58′	59′
° ′													
13 0	0117	0119	0122	0124	0126	0129	0131	0134	0136	0139	0141	0143	
10	0115	0117	0120	0122	0125	0127	0129	0132	0134	0137	0139	0141	
20	0113	0116	0118	0120	0123	0125	0127	0130	0132	0134	0137	0139	
30	0112	0114	0116	0119	0121	0123	0125	0128	0130	0132	0135	0137	
40		0112	0114	0117	0119	0121	0124	0126	0128	0131	0133	0135	
50		0111	0113	0115	0117	0120	0122	0124	0126	0129	0131	0133	
14 0		0109	0111	0113	0116	0118	0120	0122	0125	0127	0129	0131	
10		0107	0110	0112	0114	0116	0118	0121	0123	0125	0127	0129	
20		0106	0108	0110	0112	0114	0117	0119	0121	0123	0125	0127	
30		0104	0106	0109	0111	0113	0115	0117	0119	0121	0123	0126	
40		0103	0105	0107	0109	0111	0113	0115	0118	0120	0122	0124	
50		0101	0103	0106	0108	0110	0112	0114	0116	0118	0120	0122	
15 0		0100	0102	0104	0106	0108	0110	0112	0114	0116	0118	0120	
10		0099	0101	0103	0105	0107	0109	0111	0113	0115	0117	0119	
20		0097	0099	0101	0103	0105	0107	0109	0111	0113	0115	0117	
30		0096	0098	0100	0102	0104	0106	0108	0110	0112	0113	0115	
40		0094	0096	0098	0100	0102	0104	0106	0108	0110	0112	0114	
50		0093	0095	0097	0099	0101	0103	0105	0107	0108	0110	0112	
16 0		0092	0094	0096	0098	0099	0101	0103	0105	0107	0109	0111	
10		0091	0093	0094	0096	0098	0100	0102	0104	0106	0107	0109	
20		0089	0091	0093	0095	0097	0099	0100	0102	0104	0106	0108	
30		0088	0090	0092	0094	0096	0097	0099	0101	0103	0105	0106	
40		0087	0089	0091	0092	0094	0096	0098	0100	0101	0103	0105	
50		0086	0088	0089	0091	0093	0095	0096	0098	0100	0102	0104	
17 0		0085	0087	0088	0090	0092	0093	0095	0097	0099	0100	0102	
10		0084	0085	0087	0089	0091	0092	0094	0096	0097	0099	0101	
20		0083	0084	0086	0088	0089	0091	0093	0094	0096	0098	0099	
30			0083	0085	0086	0088	0090	0091	0093	0095	0096	0098	
40			0082	0084	0085	0087	0089	0090	0092	0094	0095	0097	
50			0081	0083	0084	0086	0087	0089	0091	0092	0094	0096	
18 0			0080	0082	0083	0085	0086	0088	0090	0091	0093	0094	
20			0078	0079	0081	0083	0084	0086	0087	0089	0090	0092	0093
40			0076	0077	0079	0080	0082	0083	0085	0087	0088	0090	0091
19 0			0074	0075	0077	0078	0080	0081	0083	0084	0086	0087	0089
20			0072	0073	0075	0076	0078	0079	0081	0082	0084	0085	0086
40			0070	0072	0073	0074	0076	0077	0079	0080	0081	0083	0084
20 0			0068	0070	0071	0073	0074	0075	0077	0078	0079	0081	0082
20			0067	0068	0069	0071	0072	0073	0075	0076	0077	0079	0080
40			0065	0066	0068	0069	0070	0072	0073	0074	0075	0077	0078
21 0			0063	0065	0066	0067	0068	0070	0071	0072	0074	0075	0076
20			0062	0063	0064	0065	0067	0068	0069	0070	0072	0073	0074
40			0060	0061	0063	0064	0065	0066	0067	0069	0070	0071	0072
22 0			0059	0060	0061	0062	0063	0065	0066	0067	0068	0069	0070
20			0057	0058	0059	0061	0062	0063	0064	0065	0066	0068	0069
40			0056	0057	0058	0059	0060	0061	0062	0064	0065	0066	0067
23 0			0054	0055	0057	0058	0059	0060	0061	0062	0063	0064	0065
20			0053	0054	0055	0056	0057	0058	0059	0060	0061	0063	0064
40			0052	0053	0054	0055	0056	0057	0058	0059	0060	0061	0062
24 0			0050	0051	0052	0053	0054	0055	0056	0057	0058	0059	0060
20				0050	0051	0052	0053	0054	0055	0056	0057	0058	0059
40				0049	0050	0051	0052	0053	0053	0054	0055	0056	0057
25 0				0047	0048	0049	0050	0051	0052	0053	0054	0055	0056
20				0046	0047	0048	0049	0050	0051	0052	0053	0053	0054
40				0045	0046	0047	0048	0049	0049	0050	0051	0052	0053
26 0				0044	0045	0046	0046	0047	0048	0049	0050	0051	0052
20				0043	0043	0044	0045	0046	0047	0048	0048	0049	0050
40				0041	0042	0043	0044	0045	0046	0016	0047	0048	0049
27 0				0040	0041	0042	0043	0044	0044	0045	0046	0047	0047
20				0039	0040	0041	0042	0042	0043	0044	0045	0045	0046
40				0038	0039	0040	0040	0041	0042	0043	0043	0044	0045
28 0				0037	0038	0039	0039	0040	0041	0042	0042	0043	0044

TABLE XV. Log D.

For correcting Lunar Distances

App Alt of ☽	REDUCED PARALLAX AND REFRACTION OF ☽										
	50	51′	52′	53′	54′	55′	56′	57′	58′	59′	60′
° ′											
28 0	0 0037	0 0038	0 0039	0 0039	0 0040	0 0041	0 0042	0 0042	0 0043	0 0044	
30	0 0036	0 0036	0 0037	0 0038	0 0038	0 0039	0 0040	0 0040	0 0041	0 0042	
29 0	0 0034	0 0035	0 0035	0 0036	0 0037	0 0037	0 0038	0 0039	0 0039	0 0040	
30	0 0033	0 0033	0 0034	0 0035	0 0035	0 0036	0 0036	0 0037	0 0038	0 0038	
30 0	0 0031	0 0032	0 0032	0 0033	0 0034	0 0034	0 0035	0 0035	0 0036	0 0037	
30	0 0030	0 0030	0 0031	0 0031	0 0032	0 0033	0 0033	0 0034	0 0034	0 0035	
31 0	0 0028	0 0029	0 0029	0 0030	0 0031	0 0031	0 0032	0 0032	0 0033	0 0033	
30	0 0027	0 0028	0 0028	0 0029	0 0029	0 0030	0 0030	0 0031	0 0031	0 0032	0 0032
32 0	0 0026	0 0026	0 0027	0 0027	0 0028	0 0028	0 0029	0 0029	0 0030	0 0030	0 0031
30	0 0024	0 0025	0 0025	0 0026	0 0026	0 0027	0 0027	0 0028	0 0028	0 0029	0 0029
33 0	0 0023	0 0024	0 0024	0 0025	0 0025	0 0025	0 0026	0 0026	0 0027	0 0027	0 0028
30	0 0022	0 0022	0 0023	0 0023	0 0024	0 0024	0 0025	0 0025	0 0025	0 0026	0 0026
34 0	0 0021	0 0021	0 0022	0 0022	0 0022	0 0023	0 0023	0 0024	0 0024	0 0024	0 0025
30	0 0020	0 0020	0 0020	0 0021	0 0021	0 0022	0 0022	0 0022	0 0023	0 0023	0 0023
35 0	0 0018	0 0019	0 0019	0 0020	0 0020	0 0020	0 0021	0 0021	0 0021	0 0022	0 0022
30	0 0017	0 0018	0 0018	0 0018	0 0019	0 0019	0 0019	0 0020	0.0020	0 0020	0 0021
36 0	0 0016	0 0017	0 0017	0 0017	0 0018	0 0018	0 0018	0 0019	0 0019	0 0019	0 0019
30	0 0015	0 0016	0 0016	0 0016	0 0016	0 0017	0 0017	0 0017	0 0018	0 0018	0 0018
37 0	0 0014	0 0014	0 0015	0 0015	0 0015	0 0016	0 0016	0 0016	0 0016	0 0017	0 0017
30	0 0013	0 0013	0 0014	0 0014	0 0014	0 0014	0 0015	0 0015	0 0015	0 0015	0 0016
38 0	0 0012	0 0012	0 0013	0 0013	0 0013	0 0013	0 0014	0 0014	0 0014	0 0014	0 0014
30	0 0011	0 0011	0 0012	0 0012	0 0012	0 0012	0 0012	0 0013	0 0013	0 0013	0 0013
39 0	0 0010	0 0010	0 0011	0 0011	0 0011	0 0011	0 0011	0 0012	0 0012	0 0012	0 0012
30		0 0009	0 0010	0 0010	0 0010	0 0010	0 0010	0 0010	0 0011	0 0011	0 0011
40		0 0008	0 0009	0 0009	0 0009	0 0009	0 0009	0 0009	0 0010	0 0010	0 0010
41		0 0007	0 0007	0 0007	0 0007	0 0007	0 0007	0 0007	0 0007	0 0008	0 0008
42		0 0005	0 0005	0 0005	0 0005	0 0005	0 0005	0 0005	0 0005	0 0005	0 0006
43		0 0003	0 0003	0 0003	0 0003	0 0003	0 0003	0 0003	0 0003	0 0003	0 0004
44		0 0001	0 0001	0 0001	0 0001	0 0001	0 0001	0 0002	0 0002	0 0002	0 0002
45		0 0000	0 0000	0 0000	0 0000	0 0000	0 0000	0 0000	0 0000	0 0000	0 0000
46		9 9998	9 9998	9 9998	9 9998	9 9998	9 9998	9 9998	9 9998	9 9998	9 9998
47		9 9997	9 9997	9 9997	9 9997	9 9996	9 9996	9 9996	9 9996	9 9996	9 9996
48		9 9995	9 9995	9 9995	9 9995	9 9995	9 9995	9 9995	9 9995	9 9994	9 9994
49		9 9994	9 9994	9 9994	9 9993	9 9993	9 9993	9 9993	9 9993	9 9993	9 9993
50		9 9992	9 9992	9 9992	9 9992	9 9992	9 9992	9 9992	9 9991	9 9991	9 9991
51		9 9991	9 9991	9 9991	9 9991	9 9990	9 9990	9 9990	9 9990	9 9990	9 9990
52		9 9990	9 9990	9 9990	9 9989	9 9989	9 9989	9 9989	9 9989	9 9988	9 9988
53		9 9989	9 9988	9 9988	9 9988	9 9988	9 9988	9 9987	9 9987	9 9987	9 9987
54		9 9988	9 9987	9 9987	9 9987	9 9987	9 9986	9 9986	9 9986	9 9986	9 9985
55		9 9986	9 9986	9 9986	9 9986	9 9985	9 9985	9 9985	9 9984	9 9984	9 9984
56		9 9985	9 9985	9 9985	9 9984	9 9984	9 9984	9 9984	9 9983	9 9983	9 9983
57		9 9984	9 9984	9 9984	9 9983	9 9983	9 9983	9 9982	9 9982	9 9982	9 9981
58		9 9983	9 9983	9 9983	9 9982	9 9982	9 9982	9 9981	9 9981	9 9981	9 9980
59		9 9982	9 9982	9 9981	9 9981	9 9981	9 9980	9 9980	9 9980	9 9979	9 9979
60		9 9981	9 9981	9 9980	9 9980	9 9980	9 9979	9 9979	9 9979	9 9978	9 9978
61		9 9980	9 9980	9 9980	9 9979	9 9979	9 9978	9 9978	9 9978	9 9977	9 9977
62		9 9979	9 9979	9 9979	9 9978	9 9978	9 9977	9 9977	9 9977	9 9976	9 9976
63		9 9979	9 9978	9 9978	9 9977	9 9977	9 9976	9 9976	9 9976	9 9975	9 9975
64		9 9978	9 9977	9 9977	9 9976	9 9976	9 9976	9 9975	9 9975	9 9974	9 9974
65		9 9977	9 9977	9 9976	9 9976	9 9975	9 9975	9 9974	9 9974	9 9973	9 9972
66		9 9976	9 9976	9 9975	9 9975	9 9974	9 9974	9 9973	9 9973	9 9973	9 9972
67		9 9976	9 9975	9 9975	9 9974	9 9974	9 9973	9 9973	9 9972	9 9972	9 9971
68		9 9975	9 9974	9 9974	9 9973	9 9973	9 9972	9 9972	9 9971	9 9971	9 9970
69		9 9974	9 9974	9 9973	9 9973	9 9972	9 9972	9 9971	9 9971	9 9970	9 9970
70		9 9974	9 9973	9 9973	9 9972	9 9972	9 9971	9 9970	9 9970	9 9969	9 9969
72		9 9972	9 9972	9 9971	9 9971	9 9970	9 9970	9 9969	9 9969	9 9968	9 9968
74		9 9971	9 9971	9 9970	9 9970	9 9969	9 9969	9 9968	9 9968	9 9967	9 9966
76		9 9971	9 9970	9 9969	9 9969	9 9968	9 9968	9 9967	9 9966	9 9966	9 9965
78		9 9970	9 9969	9 9969	9 9968	9 9967	9 9967	9 9966	9 9966	9 9965	9 9964
80		9 9969	9 9969	9 9968	9 9967	9 9967	9 9966	9 9965	9 9965	9 9964	9 9964
90		9 9968	9 9967	9 9966	9 9966	9 9965	9 9964	9 9964	9 9963	9 9963	9 9962

TABLE XVI.

Second Correction of the Lunar Distance

Apparent Distance	FIRST CORRECTION OF DISTANCE																							Apparent Distance
	3′	7′	10′	12′	14′	16′	18′	20	21′	22′	23′	24′	25′	26′	27′	28′	29′	30′	31′	32′	33′	34′	35′	36′	
Subtr	″	″	″	″	″	″	″	″	″	″	″	″	″	″	″	″	″	″	″	″	″	″	″	″	Add
15° 0′	0	2	3	5	6	8	11	13	14	16	17	19	20	22	24	26	27	29	31	33	35	38	40	42	
30	0	2	3	5	6	8	10	13	14	15	17	18	20	21	23	25	26	28	30	32	34	36	39	41	
16 0	0	1	3	4	6	8	10	12	13	15	16	18	19	21	22	24	26	27	29	31	33	35	37	39	
30	0	1	3	4	6	8	10	12	13	14	16	17	18	20	21	23	25	27	28	30	32	34	36	38	
17 0	0	1	3	4	6	7	9	11	13	14	15	16	18	19	21	22	24	26	27	29	31	33	35	37	
30	0	1	3	4	5	7	9	11	12	13	15	16	17	19	20	22	23	25	27	28	30	32	34	36	
18 0	0	1	3	4	5	7	9	11	12	13	14	15	17	18	20	21	23	24	26	28	29	31	33	35	
30	0	1	3	4	5	7	8	10	12	13	14	15	16	18	19	20	22	23	25	27	28	30	32	34	
19 0	0	1	3	4	5	6	8	10	11	12	13	15	16	17	18	20	21	23	24	26	28	29	31	33	
30	0	1	2	4	5	6	8	10	11	12	13	14	15	17	18	19	21	22	24	25	27	28	30	32	
20	0	1	2	3	5	6	8	10	11	12	13	14	15	16	17	19	20	22	23	25	26	28	29	31	
21	0	1	2	3	4	6	7	9	10	11	12	13	14	15	17	18	19	20	22	23	25	26	28	29	
22	0	1	2	3	4	6	7	9	10	10	11	12	14	15	16	17	18	19	21	22	24	25	26	28	
23	0	1	2	3	4	5	7	8	9	10	11	12	13	14	15	16	17	19	20	21	22	24	25	27	
24	0	1	2	3	4	5	6	8	9	9	10	11	12	13	14	15	16	18	19	20	21	23	24	25	
25	0	1	2	3	4	5	6	7	8	9	10	11	12	13	14	15	16	17	18	19	20	22	23	24	
26	0	1	2	3	4	5	6	7	8	9	9	10	11	12	13	14	15	16	17	18	19	21	22	23	
27	0	1	2	2	3	4	6	7	8	8	9	10	11	12	12	13	14	15	16	18	19	20	21	22	
28	0	1	2	2	3	4	5	7	7	8	9	9	10	11	12	13	14	15	16	17	18	19	20	21	
29	0	1	2	2	3	4	5	6	7	8	8	9	10	11	11	12	13	14	15	16	17	18	19	20	
30	0	1	2	2	3	4	5	6	7	7	8	9	9	10	11	12	13	14	14	15	16	17	19	20	
31	0	1	1	2	3	4	5	6	6	7	8	8	9	10	11	11	12	13	14	15	16	17	18	19	
32	0	1	1	2	3	4	5	6	6	7	7	8	9	9	10	11	12	13	13	14	15	16	17	18	
33	0	1	1	2	3	3	4	5	6	7	7	8	8	9	10	11	11	12	13	14	15	16	16	17	
34	0	1	1	2	3	3	4	5	6	6	7	7	8	9	9	10	11	12	12	13	14	15	16	17	
35	0	1	1	2	2	3	4	5	5	6	7	7	8	8	9	10	10	11	12	13	14	14	15	16	
36	0	1	1	2	2	3	4	5	5	6	6	7	8	8	9	9	10	11	12	12	13	14	15	16	
37	0	1	1	2	2	3	4	5	5	6	6	7	7	8	8	9	10	10	11	12	13	13	14	15	
38	0	1	1	2	2	3	4	4	5	5	6	6	7	8	8	9	9	10	11	11	12	13	14	14	
39	0	1	1	2	2	3	3	4	5	5	6	6	7	7	8	8	9	10	10	11	12	12	13	14	
40	0	1	1	2	2	3	3	4	5	5	6	6	7	7	8	8	9	9	10	11	11	12	13	13	140°
42	0	0	1	1	2	2	3	4	4	5	5	6	6	7	7	8	8	9	9	10	11	11	12	13	138
44	0	0	1	1	2	2	3	4	4	4	5	5	6	6	7	7	8	8	9	9	10	10	11	12	136
46	0	0	1	1	2	2	3	3	4	4	4	5	5	6	6	7	7	8	8	9	9	10	10	11	134
48	0	0	1	1	2	2	3	3	3	4	4	5	5	5	6	6	7	7	8	8	9	9	10	10	132
50	0	0	1	1	1	2	2	3	3	4	4	4	5	5	5	6	6	7	7	8	8	8	9	9	130
52	0	0	1	1	1	2	2	3	3	3	4	4	4	5	5	5	6	6	7	7	7	8	8	9	128
54	0	0	1	1	1	2	2	3	3	3	3	4	4	4	5	5	5	6	6	6	7	7	8	8	126
56	0	0	1	1	1	2	2	2	3	3	3	3	4	4	4	5	5	5	6	6	6	7	7	8	124
58	0	0	1	1	1	1	2	2	2	3	3	3	3	4	4	4	5	5	5	6	6	6	7	7	122
60	0	0	0	1	1	1	2	2	2	2	3	3	3	3	4	4	4	5	5	5	5	6	6	7	120
62	0	0	0	1	1	1	2	2	2	2	2	3	3	3	3	4	4	4	4	5	5	5	6	6	118
64	0	0	0	1	1	1	1	2	2	2	2	2	3	3	3	3	4	4	4	4	5	5	5	6	116
66	0	0	0	1	1	1	1	2	2	2	2	2	2	3	3	3	3	4	4	4	4	4	5	5	114
68	0	0	0	1	1	1	1	1	2	2	2	2	2	2	3	3	3	3	3	4	4	4	4	5	112
70	0	0	0	0	1	1	1	1	1	2	2	2	2	2	2	2	3	3	3	3	3	4	4	4	110
74	0	0	0	0	0	1	1	1	1	1	1	1	2	2	2	2	2	2	2	3	3	3	3	3	106
78	0	0	0	0	0	0	1	1	1	1	1	1	1	1	1	1	2	2	2	2	2	2	2	2	102
82	0	0	0	0	0	0	0	0	1	1	1	1	1	1	1	1	1	1	1	1	1	1	2	2	98
86	0	0	0	0	0	0	0	0	0	0	0	0	0	0	0	0	1	1	1	1	1	1	1	1	94
90°	0	0	0	0	0	0	0	0	0	0	0	0	0	0	0	0	0	0	0	0	0	0	0	0	90°
Apparent Distance	3′	7′	10′	12′	14′	16′	18′	20′	21′	22′	23′	24′	25′	26′	27′	28′	29′	30′	31′	32′	33′	34′	35′	36	Apparent Distance
	FIRST CORRECTION OF DISTANCE																								

TABLE XVI.

Second Correction of the Lunar Distance

Apparent Distance	FIRST CORRECTION OF DISTANCE																								Apparent Distance
	37′	38′	39′	40′	41′	42′	43′	44	45′	46′	47′	48′	49′	50′	51′	52′	53′	54′	55′	56′	57′	58′	59′	60′	
Subtr	″	″	″	″	″	″	″	″	″	″	″	″	″	″	″	″	″	″	″	″	″	″	″	′	Add
15° 0′	45	47	50	52	55	57	60	63	66	69	72	75	78	81	85	88	91	95	99	102	106	110	113	117	
30	43	45	48	50	53	56	58	61	64	67	70	72	76	79	82	85	88	92	95	99	102	106	110	113	
16 0	42	44	46	49	51	54	56	59	62	64	67	70	73	76	79	82	85	89	92	95	99	102	106	110	
30	40	43	45	47	50	52	54	57	60	62	65	68	71	74	77	80	83	86	89	92	96	99	103	106	
17 0	39	41	43	46	48	50	53	55	58	60	63	66	69	71	74	77	80	83	86	90	93	96	99	103	
30	38	40	42	44	47	49	51	54	56	59	61	64	66	69	72	75	78	81	84	87	90	93	96	100	
18 0	37	39	41	43	45	47	50	52	54	57	59	62	64	67	70	73	75	78	81	84	87	90	94	97	
30	36	38	40	42	44	46	48	50	53	55	58	60	63	65	68	71	73	76	79	82	85	88	91	94	
19 0	35	37	39	41	43	45	47	49	51	54	56	58	61	63	66	69	71	74	77	79	82	85	88	91	
30	34	36	37	39	41	43	46	48	50	52	54	57	59	62	64	67	69	72	75	77	80	83	86	89	
20	33	35	36	38	40	42	44	46	49	51	53	55	58	60	62	65	67	70	73	75	78	81	83	86	
21	31	33	35	36	38	40	42	44	46	48	50	52	55	57	59	61	64	66	69	71	74	76	79	82	
22	30	31	33	35	36	38	40	42	44	46	48	50	52	54	56	58	61	63	65	68	70	73	75	78	
23	28	30	31	33	35	36	38	40	42	44	45	47	49	51	53	56	58	60	62	64	67	69	72	74	
24	27	28	30	31	33	35	36	38	40	41	43	45	47	49	51	53	55	57	59	61	64	66	68	71	
25	26	27	28	30	31	33	35	36	38	40	41	43	45	47	49	51	53	55	57	59	61	63	65	67	
26	25	26	27	29	30	32	33	35	36	38	40	41	43	45	47	48	50	52	54	56	58	60	62	64	
27	23	25	26	27	29	30	32	33	35	36	38	39	41	43	45	46	48	50	52	54	56	58	60	62	
28	22	24	25	26	28	29	30	32	33	35	36	38	39	41	43	44	46	48	50	51	53	55	57	59	
29	22	23	24	25	26	28	29	30	32	33	35	36	38	39	41	43	44	46	48	49	51	53	55	57	
30	21	22	23	24	25	27	28	29	31	32	33	35	36	38	39	41	42	44	46	47	49	51	53	54	
31	20	21	22	23	24	26	27	28	29	31	32	33	35	36	38	39	41	42	44	46	47	49	51	52	
32	19	20	21	22	23	25	26	27	28	30	31	32	34	35	36	38	39	41	42	44	45	47	49	50	
33	18	19	20	22	23	24	25	26	27	28	30	31	32	34	35	36	38	39	41	42	44	45	47	48	
34	18	19	20	21	22	23	24	25	26	27	29	30	31	32	34	35	36	38	39	41	42	44	45	47	
35	17	18	19	20	21	22	23	24	25	26	28	29	30	31	32	34	35	36	38	39	40	42	43	45	
36	16	17	18	19	20	21	22	23	24	25	27	28	29	30	31	32	34	35	36	38	39	40	42	43	
37	16	17	18	19	19	20	21	22	23	25	26	27	28	29	30	31	33	34	35	36	38	39	40	42	
38	15	16	17	18	19	20	21	22	23	24	25	26	27	28	29	30	31	33	34	35	36	38	39	40	
39	15	16	16	17	18	19	20	21	22	23	24	25	26	27	28	29	30	31	33	34	35	36	38	39	
40	14	15	16	17	17	18	19	20	21	22	23	24	25	26	27	28	29	30	31	33	34	35	36	37	140°
42	13	14	15	16	16	17	18	19	20	21	21	22	23	24	25	26	27	28	29	30	31	33	34	35	138
44	12	13	14	15	15	16	17	17	18	19	20	21	22	23	24	24	25	26	27	28	29	30	31	33	136
46	12	12	13	14	14	15	16	16	17	18	19	19	20	21	22	23	24	25	26	26	27	28	29	30	134
48	11	11	12	13	13	14	15	15	16	17	17	18	19	20	20	21	22	23	24	25	26	26	27	28	132
50	10	11	11	12	12	13	14	14	15	16	16	17	18	18	19	20	21	21	22	23	24	25	25	26	130
52	9	10	10	11	11	12	13	13	14	14	15	16	16	17	18	18	19	20	21	21	22	23	24	25	128
54	9	9	10	10	11	11	12	12	13	13	14	15	15	16	16	17	18	18	19	20	21	21	22	23	126
56	8	9	9	9	10	10	11	11	12	12	13	14	14	15	15	16	17	17	18	18	19	20	20	21	124
58	7	8	8	9	9	10	10	11	11	12	12	13	13	14	14	15	15	16	16	17	18	18	19	20	122
60	7	7	8	8	8	9	9	10	10	11	11	12	12	13	13	14	14	15	15	16	16	17	18	18	120
62	6	7	7	7	8	8	9	9	9	10	10	11	11	12	12	13	13	14	14	15	15	16	16	17	118
64	6	6	6	7	7	8	8	8	9	9	9	10	10	11	11	12	12	12	13	13	14	14	15	15	116
66	5	6	6	6	7	7	7	8	8	8	9	9	9	10	10	11	11	11	12	12	13	13	14	14	114
68	5	5	5	6	6	6	7	7	7	7	8	8	8	9	9	10	10	10	11	11	11	12	12	13	112
70	4	5	5	5	5	6	6	6	6	7	7	7	8	8	8	9	9	9	10	10	10	11	11	11	110
74	3	4	4	4	4	4	5	5	5	5	6	6	6	6	7	7	7	7	8	8	8	8	9	9	106
78	3	3	3	3	3	3	3	4	4	4	4	4	4	5	5	5	5	5	6	6	6	6	6	7	102
82	2	2	2	2	2	2	2	2	2	3	3	3	3	3	3	3	3	4	4	4	4	4	4	4	98
86	1	1	1	1	1	1	1	1	1	1	1	1	1	2	2	2	2	2	2	2	2	2	2	2	94
90°	0	0	0	0	0	0	0	0	0	0	0	0	0	0	0	0	0	0	0	0	0	0	0	0	90°
Apparent Distance	37′	38′	39′	40′	41′	42′	43′	44′	45′	46	47′	48′	49′	50′	51′	52′	53′	54′	55′	56′	57′	58′	59′	60′	Apparent Distance
	FIRST CORRECTION OF DISTANCE																								

TABLE XVII.

For finding the Correction of the Lunar Distance for the Contraction of the Moon's Semidiameter

TABLE XVII. A. Giving the Argument for Table XVII. B.

Reduced P and R of ☽	APPARENT ALTITUDE OF ☽																						
	5°	5½°	6°	6½°	7°	7½°	8°	8½°	9°	9½°	10°	11°	12°	13°	14°	15°	16°	17°	18°	20°	25°	30°	40°	50°
41′	65	56																						
42	63	54	47	41																				
43	62	53	46	40	35																			
44	60	51	45	39	34	30	27																	
45	58	50	43	38	33	30	26	24	21	20														
46	57	49	42	37	33	29	26	23	21	19	17	15												
47	56	48	41	36	32	28	25	23	20	19	17	14	12	10										
48	54	46	40	35	31	28	25	22	20	18	17	14	12	10	9	8	7	6						
49	53	45	39	35	30	27	24	22	19	18	16	14	12	10	9	8	7	6	6	5	3			
50	52	44	38	34	30	26	24	21	19	17	16	13	11	10	9	8	7	6	5	5	3	3	2	
51	50	43	38	33	29	26	23	21	19	17	15	13	11	10	8	7	7	6	5	5	3	2	2	2
52	49	42	37	32	28	25	23	20	18	17	15	13	11	9	8	7	7	6	5	4	3	2	2	2
53	48	41	36	32	28	25	22	20	18	16	15	12	11	9	8	7	6	6	5	4	3	2	2	2
54	47	41	35	31	27	24	22	19	18	16	15	12	10	9	8	7	6	6	5	4	3	2	2	2
55			35	30	27	24	21	19	17	16	14	12	10	9	8	7	6	6	5	4	3	2	2	2
56					26	23	21	19	17	15	14	12	10	9	8	7	6	5	5	4	3	2	2	2
57								18	17	15	14	12	10	9	7	7	6	5	5	4	3	2	2	2
58											13	11	10	8	7	7	6	5	5	4	3	2	2	2
59														8	7	6	6	5	5	4	3	2	2	2
60																				4	3	2	2	2

TABLE XVII B. Contraction of ☽'s Semidiameter.

Whole Correction of ☽	ARGUMENT = NUMBER FROM TABLE XVII A																									
	2	4	6	8	10	12	14	16	18	20	22	24	26	28	30	32	34	36	38	40	44	48	52	56	60	64
	″	″	″	″	″	″	″	″	″	″	″	″	″	″	″	″	″	″	″	″	″	″	″	″	″	″
0′	0	0	0	0	0	0	0	0	0	0	0	0	0	0	0	0	0	0	0	0	0	0	0	0	0	0
5	0	0	0	0	0	0	0	0	0	0	0	0	0	0	0	0	0	0	0	0	0	0	0	0	0	0
10	0	0	0	0	0	0	0	0	0	0	0	0	1	1	1	1	1	1	1	1	1	1	1	1	1	1
15	0	0	0	0	0	1	1	1	1	1	1	1	1	1	1	1	2	2	2	2	2	2	2	3	3	3
20	0	0	0	1	1	1	1	1	1	2	2	2	2	2	2	3	3	3	3	3	4	4	4	4	5	5
22	0	0	1	1	1	1	1	2	2	2	2	2	3	3	3	3	3	3	4	4	4	5	5	5	6	6
24	0	0	1	1	1	1	2	2	2	2	3	3	3	3	3	4	4	4	4	5	5	6	6	6	7	7
26	0	1	1	1	1	2	2	2	2	3	3	3	4	4	4	4	5	5	5	5	6	6	7	8	8	9
28	0	1	1	1	2	2	2	3	3	3	3	4	4	4	5	5	5	6	6	6	7	8	8	9	9	10
30	0	1	1	1	2	2	3	3	3	4	4	4	5	5	5	6	6	6	7	7	8	9	9	10	11	12
32	0	1	1	2	2	2	3	3	4	4	5	5	5	6	6	7	7	7	8	8	9	10	11	11	12	13
34	0	1	1	2	2	3	3	4	4	5	5	6	6	6	7	7	8	8	9	9	10	11	12	13	14	15
36	1	1	2	2	3	3	4	4	5	5	6	6	7	7	8	8	9	9	10	10	11	12	13	15	16	17
38	1	1	2	2	3	3	4	5	5	6	6	7	8	8	9	9	10	10	11	12	13	14	15	16	17	18
40	1	1	2	3	3	4	4	5	6	6	7	8	8	9	9	10	11	12	12	13	14	15	17	18	19	20
42	1	1	2	3	4	4	5	6	6	7	8	8	9	10	11	11	12	13	13	14	16	17	18	20	21	23
44	1	2	2	3	4	5	5	6	7	8	9	9	10	11	12	12	13	14	15	15	17	19	20	22	23	
45	1	2	2	3	4	5	6	6	7	8	9	10	11	11	12	13	14	15	15	16	18	19	21	23	24	
46	1	2	3	3	4	5	6	7	7	8	9	10	11	12	13	14	14	15	16	17	19	20	22	24		
47	1	2	3	4	4	5	6	7	8	9	10	11	11	12	13	14	15	16	17	18	19	21	23	25		
48	1	2	3	4	5	6	6	7	8	9	10	11	12	13	14	15	16	17	18	18	20	22	24	26		
49	1	2	3	4	5	6	7	8	9	10	11	12	12	13	14	15	16	17	18	19	21	23	25			
50	1	2	3	4	5	6	7	8	9	10	11	12	13	14	15	16	17	18	19	20	22	24	26			
51	1	2	3	4	5	6	7	8	9	10	11	12	14	15	16	17	18	19	20	21	23	25	27			
52	1	2	3	4	5	6	8	9	10	11	12	13	14	15	16	17	18	19	21	22	24	26				
53	1	2	3	4	6	7	8	9	10	11	12	13	15	16	17	18	19	20	21	22	25	27				
54		2	3	5	6	7	8	9	10	12	13	14	15	16	17	19	20	21	22	23	26					
55		2	4	5	6	7	8	10	11	12	13	15	16	17	18	19	21	22								
56		3	4	5	6	8	9	10	11	13	14	15	16													
57			4	5	7																					

TABLE XVIII.

For finding the Correction of the Lunar Distance for the Contraction of the Sun's Semidiameter

TABLE XVIII. A. Giving the Argument for Table XVIII. B.

Reduced P and R of ☉	APPARENT ALTITUDE OF ☉																							
	5°	5½°	6°	6½°	7°	7½°	8°	8½°	9°	9½°	10°	11°	12°	13°	14°	15°	16°	17°	18°	20°	25°	30°	40°	50°
1′ 0″																							22	18
30																					30	34	24	29
2 0																			35	37	42	46	46	
30																	40	42	44	47	53	59		
3 0															44	46	49	51	53	57				
30													45	48	51	54	57	60	62	67				
4 0											45	49	52	55	59	62	65	68						
30									47	49	51	55	59	63	66	70								
5 0							47	50	52	54	57	61	66	70	74									
30					47	50	52	55	57	60	62	67	72											
6 0				49	52	55	57	60	63	66	68	74												
30			50	53	56	59	62	65	68	71	74													
7 0		51	54	58	61	64	67	70	74															
30		55	58	62	65	69	72	75																
8 0	55	59	62	66	70	73	77																	
30	59	63	66	70	74	78																		
9 0	62	66	70	74	79																			
30	66	70	74	79																				
10 0	69	74	78																					
30	73	77																						
11 0	76	81																						
30	80																							

TABLE XVIII. B. Contraction of ☉'s Semidiameter.

Whole Correction of ☉	ARGUMENT = NUMBER FROM TABLE XVIII A																							
	20	24	28	32	36	40	44	46	48	50	52	54	56	58	60	62	64	66	68	70	72	74	76	78
	″	″	″	″	″	″	″	″	″	″	″	″	″	″	″	″	″	″	″	″	″	″	″	″
0′ 0″	0	0	0	0	0	0	0	0	0	0	0	0	0	0	0	0	0	0	0	0	0	0	0	0
1 0	1	1	1	1	1	0	0	0	0	0	0	0	0	0	0	0	0	0	0	0	0	0	0	0
2 0			2	2	2	2	2	2	2	1	1	1	1	1	1	1	1	1	1	1	1	1	1	1
30					3	3	3	2	2	2	2	2	2	2	2	2	2	2	2	2	2	2	1	1
3 0						4	4	4	3	3	3	3	3	3	3	3	3	2	2	2	2	2	2	2
30							5	5	5	4	4	4	4	4	4	4	3	3	3	3	3	3	3	3
4 0							7	6	6	6	6	5	5	5	5	5	5	4	4	4	4	4	4	4
20								7	7	7	7	6	6	6	6	5	5	5	5	5	5	5	4	4
40								9	8	8	8	7	7	7	7	6	6	6	6	6	5	5	5	5
5 0								10	9	9	9	8	8	8	8	7	7	7	7	6	6	6	6	6
20									11	10	10	9	9	9	9	8	8	8	8	7	7	7	7	7
40									12	12	11	11	10	10	10	9	9	9	9	8	8	8	8	7
6 0										13	12	12	12	11	11	10	10	10	10	9	9	9	9	8
20										14	14	13	13	12	12	12	11	11	11	10	10	10	10	9
40										16	15	15	14	14	13	13	13	12	12	11	11	11	11	10
7 0										18	17	16	16	15	15	14	14	13	13	13	12	12	12	11
20											19	18	17	17	16	16	15	15	14	14	13	13	13	12
40												20	19	18	18	17	17	16	16	15	15	14	14	14
8 0												21	21	20	19	19	18	17	17	16	16	16	15	15
20														22	21	20	20	19	18	18	17	17	16	16
40														23	23	22	21	20	20	19	19	18	18	17
9 0																24	23	22	21	21	20	20	19	19
20																	25	24	23	22	22	21	21	20
40																		25	25	24	23	23	22	22
10 0																			26	26	25	24	24	[illegible]
20																				28	27	26	25	
40																					28	28	27	
11 0																							29	
20																								

TABLE XIX.

For finding the value of *N* for correcting lunar distances for the compression of the earth

TABLE XIX A giving 1st Part of *N*

App Dist	Moon's Declination										
	0°	3°	6°	9°	12°	15°	18°	21°	24°	27°	30°
°	″	″	″	″	″	″	″	″	″	″	″
20	—0	3	6	10	13	16	19	22	25	28	31
22	0	3	6	9	12	14	17	20	23	25	28
24	0	3	5	8	11	13	16	18	21	23	25
26	0	2	5	7	10	12	14	17	19	21	23
28	0	2	4	7	9	11	13	15	17	19	21
30	—0	2	4	6	8	10	12	14	16	18	20
32	0	2	4	6	8	9	11	13	15	16	18
34	0	2	4	5	7	9	10	12	14	15	17
36	0	2	3	5	7	8	10	11	13	14	16
38	0	2	3	5	6	8	9	10	12	13	14
40	—0	1	3	4	6	7	8	10	11	12	13
42	0	1	3	4	5	7	8	9	10	11	13
44	0	1	2	4	5	6	7	8	10	11	12
46	0	1	2	3	5	6	7	8	9	10	11
48	0	1	2	3	4	5	6	7	8	9	10
50	—0	1	2	3	4	5	6	7	8	9	10
52	0	1	2	3	4	5	5	6	7	8	9
54	0	1	2	3	3	4	5	6	7	7	8
56	0	1	2	2	3	4	5	5	6	7	8
58	0	1	1	2	3	4	4	5	6	6	7
60	—0	1	1	2	3	3	4	5	5	6	7
62	0	1	1	2	3	3	4	4	5	5	6
64	0	1	1	2	2	3	3	4	4	5	6
66	0	1	1	2	2	3	3	4	4	5	5
68	0	0	1	1	2	2	3	3	4	4	5
70	—0	0	1	1	2	2	3	3	3	4	4
72	0	0	1	1	2	2	2	3	3	3	4
74	0	0	1	1	1	2	2	2	3	3	3
76	0	0	1	1	1	1	2	2	2	3	3
78	0	0	0	1	1	1	1	2	2	2	2
80	—0	0	0	1	1	1	1	1	2	2	2
82	0	0	0	0	1	1	1	1	1	1	2
84	0	0	0	0	0	1	1	1	1	1	1
86	0	0	0	0	0	0	0	1	1	1	1
88	0	0	0	0	0	0	0	0	0	0	0
90	—0	0	0	0	0	0	0	0	0	0	0
92	+0	0	0	0	0	0	0	0	0	0	0
94	0	0	0	0	0	0	0	1	1	1	1
96	0	0	0	0	0	1	1	1	1	1	1
98	0	0	0	0	1	1	1	1	1	1	2
100	+0	0	0	1	1	1	1	1	2	2	2
102	0	0	0	1	1	1	1	2	2	2	2
104	0	0	1	1	1	1	2	2	2	3	3
106	0	0	1	1	1	2	2	2	3	3	3
108	0	0	1	1	2	2	2	3	3	3	4
110	+0	0	1	1	2	2	3	3	3	4	4
112	0	0	1	1	2	2	3	3	4	4	5
114	0	1	1	2	2	3	3	4	4	5	5
116	0	1	1	2	2	3	3	4	4	5	6
118	0	1	1	2	3	3	4	4	5	5	6
120	+0	1	1	2	3	3	4	5	5	6	7
122	0	1	1	2	3	4	4	5	6	6	7
124	0	1	2	2	3	4	5	5	6	7	8
126	0	1	2	3	3	4	5	6	7	7	8
128	0	1	2	3	4	5	5	6	7	8	9
130	+0	1	2	3	4	5	6	7	8	9	10

TABLE XIX B giving 2d Part of *N*

App Dist	Sun's, Planet's, or Star's Declination										
	0°	3°	6°	9°	12°	15°	18°	21°	24°	27°	30°
°	″	″	″	″	″	″	″	″	″	″	″
20	+0	3	7	10	14	17	20	24	27	30	33
22	0	3	6	9	13	16	19	22	25	27	30
24	0	3	6	9	12	14	17	20	23	25	28
26	0	3	5	8	11	13	16	18	21	23	26
28	0	3	5	8	10	12	15	17	20	22	24
30	+0	2	5	7	9	12	14	16	18	21	23
32	0	2	4	7	9	11	13	15	17	19	21
34	0	2	4	6	8	11	13	15	16	18	20
36	0	2	4	6	8	10	12	14	16	17	19
38	0	2	4	6	8	10	11	13	15	17	18
40	+0	2	4	6	7	9	11	13	14	16	18
42	0	2	4	5	7	9	10	12	14	15	17
44	0	2	3	5	7	8	10	12	13	15	16
46	0	2	3	5	6	8	10	11	13	14	16
48	0	2	3	5	6	8	9	11	12	14	15
50	+0	2	3	5	6	8	9	11	12	13	15
52	0	2	3	4	6	7	9	10	12	13	14
54	0	1	3	4	6	7	9	10	11	13	14
56	0	1	3	4	6	7	8	10	11	12	14
58	0	1	3	4	6	7	8	10	11	12	13
60	+0	1	3	4	5	7	8	9	11	12	13
62	0	1	3	4	5	7	8	9	10	12	13
64	0	1	3	4	5	7	8	9	10	11	13
66	0	1	3	4	5	6	8	9	10	11	12
68	0	1	3	4	5	6	8	9	10	11	12
70	+0	1	3	4	5	6	7	9	10	11	12
72	0	1	2	4	5	6	7	9	10	11	12
74	0	1	2	4	5	6	7	8	10	11	12
76	0	1	2	4	5	6	7	8	9	11	12
78	0	1	2	4	5	6	7	8	9	11	12
80	+0	1	2	4	5	6	7	8	9	10	11
82	0	1	2	4	5	6	7	8	9	10	11
84	0	1	2	4	5	6	7	8	9	10	11
86	0	1	2	4	5	6	7	8	9	10	11
88	0	1	2	4	5	6	7	8	9	10	11
90	+0	1	2	4	5	6	7	8	9	10	11
92	0	1	2	4	5	6	7	8	9	10	11
94	0	1	2	4	5	6	7	8	9	10	11
96	0	1	2	4	5	6	7	8	9	10	11
98	0	1	2	4	5	6	7	8	9	10	11
100	+0	1	2	4	5	6	7	8	9	10	11
102	0	1	2	4	5	6	7	8	9	11	12
104	0	1	2	4	5	6	7	8	9	11	12
106	0	1	2	4	5	6	7	8	10	11	12
108	0	1	2	4	5	6	7	9	10	11	12
110	+0	1	3	4	5	6	7	9	10	11	12
112	0	1	3	4	5	6	8	9	10	11	12
114	0	1	3	4	5	6	8	9	10	11	12
116	0	1	3	4	5	7	8	9	10	11	13
118	0	1	3	4	5	7	8	9	10	12	13
120	+0	1	3	4	5	7	8	9	11	12	13
122	0	1	3	4	6	7	8	10	11	12	13
124	0	1	3	4	6	7	8	10	11	12	14
126	0	1	3	4	6	7	9	10	11	13	14
128	0	2	3	4	6	7	9	10	12	13	14
130	+0	2	3	5	6	8	9	11	12	13	15

The signs in the 0° column apply to all the numbers in the same line, and are to be used when the declination is *North* When the declination is *South*, change the sign + to — and — to +

TABLE XX.

CORRECTION REQUIRED ON ACCOUNT OF SECOND DIFFERENCES OF THE MOON'S MOTION, IN FINDING THE GREENWICH TIME CORRESPONDING TO A CORRECTED LUNAR DISTANCE

Difference of the Proportional Logarithms in the Ephemeris.

Approximate Interval				2	4	6	8	10	12	14	16	18	20	22	24	26	28	30	32	34	36	38	40	42	44	46	48	50	52
h	m	h	m	s	s	s	s	s	s	s	s	s	s	s	s	s	s	s	s	s	s	s	s	s	s	s	s	s	s
0	0	3	0	0	0	0	0	0	0	0	0	0	0	0	0	0	0	0	0	0	0	0	0	0	0	0	0	0	0
0	10	2	50	0	0	0	1	1	1	1	1	1	1	1	2	2	2	2	2	2	2	2	3	3	3	3	3	3	3
0	20	2	40	0	1	1	1	1	2	2	2	2	2	3	3	3	3	4	4	4	4	5	5	5	5	6	6	6	6
0	30	2	30	0	1	1	2	2	2	2	3	3	3	4	4	5	5	5	6	6	6	7	7	7	8	8	8	9	9
0	40	2	20	0	1	1	2	2	3	3	3	4	4	5	5	6	6	6	7	7	8	8	9	9	10	10	10	11	11
0	50	2	10	1	1	2	2	3	3	4	4	5	5	5	6	6	7	7	8	8	9	9	10	10	11	12	12	13	13
1	0	2	0	1	1	2	2	3	3	4	4	5	6	6	7	7	8	8	9	9	10	10	11	12	12	13	13	14	14
1	10	1	50	1	1	2	2	3	4	4	5	5	6	6	7	8	8	9	9	10	11	11	12	12	13	14	14	15	15
1	20	1	40	1	1	2	3	3	4	4	5	6	6	7	7	8	9	9	10	10	11	12	12	13	14	14	15	15	16
1	30	1	30	1	1	2	3	3	4	4	5	6	6	7	8	8	9	9	10	11	11	12	12	13	14	14	15	16	16

Difference of the Proportional Logarithms in the Ephemeris.

Approximate Interval				54	56	58	60	62	64	66	68	70	72	74	76	78	80	82	84	86	88	90	92	94	96	98	100	102
h	m	h	m	s	s	s	s	s	s	s	s	s	s	s	s	s	s	s	s	s	s	s	s	s	s	s	s	s
0	0	3	0	0	0	0	0	0	0	0	0	0	0	0	0	0	0	0	0	0	0	0	0	0	0	0	0	0
0	10	2	50	4	4	4	4	4	4	4	4	5	5	5	5	5	5	5	6	6	6	6	6	6	6	6	7	7
0	20	2	40	7	7	7	7	8	8	8	8	9	9	9	9	10	10	10	10	11	11	11	11	12	12	12	12	13
0	30	2	30	9	10	10	10	11	11	12	12	12	13	13	13	14	14	14	14	15	15	16	16	16	17	17	17	18
0	40	2	20	12	12	13	13	13	14	14	15	15	16	16	16	17	17	18	18	19	19	19	20	20	21	21	22	22
0	50	2	10	14	14	15	15	16	16	16	17	17	18	19	19	20	20	21	21	22	22	22	23	23	24	24	25	26
1	0	2	0	15	16	16	17	17	18	18	19	19	20	21	21	22	22	23	23	24	24	25	25	26	27	27	28	28
1	10	1	50	16	17	17	18	18	19	19	20	21	21	22	22	23	24	24	25	25	26	27	27	28	28	29	30	30
1	20	1	40	17	17	18	19	19	20	20	21	21	22	23	23	24	25	25	26	26	27	28	28	29	29	30	31	31
1	30	1	30	17	18	18	19	19	20	21	21	22	23	23	24	24	25	25	26	27	27	28	29	29	30	31	31	32

Difference of the Proportional Logarithms in the Ephemeris.

Approximate Interval				104	106	108	110	112	114	116	118	120	122	124	126	128	130	132	134	136	138
h	m	h	m	s	s	s	s	s	s	s	s	s	s	s	s	s	s	s	s	s	s
0	0	3	0	0	0	0	0	0	0	0	0	0	0	0	0	0	0	0	0	0	0
0	10	2	50	7	7	7	7	7	7	8	8	8	8	8	8	8	8	9	9	9	9
0	20	2	40	13	13	13	14	14	14	14	15	15	15	15	15	16	16	16	16	17	17
0	30	2	30	18	18	19	19	19	20	20	20	21	21	21	22	22	22	23	23	24	24
0	40	2	20	22	23	23	24	24	25	25	25	26	26	27	27	28	28	28	29	29	30
0	50	2	10	26	26	27	27	28	29	29	29	30	30	31	31	32	32	33	33	34	34
1	0	2	0	29	29	30	30	31	31	32	33	33	34	34	35	35	36	37	37	38	38
1	10	1	50	31	31	32	32	33	34	34	35	35	36	[illegible]	37	38	38	39	40	40	41
1	20	1	40	32	33	33	34	34	35	35	36	37	38	38	39	39	40	41	41	42	42
1	30	1	30	32	33	34	34	35	35	36	36	37	38	39	39	40	40	41	42	42	43

The Correction is to be *added* to the approximate Greenwich Time when the Proportional Logarithms in the Ephemeris are *decreasing*, and *subtracted* when they are *increasing*

INDEX.

[The references are to the volume and page]

ABERRATION, of a star in the direction of the observer's motion, found, I, 629, annual aberration of a star in longitude and latitude, found, 630, in right ascension and declination, 633, GAUSS's tables, 635, of the sun, 638, diurnal aberration in right ascension and declination, found, 638, velocity of light, 640, planetary, 641, constant of, 689, effect upon the angular distance of two stars, found, II, 466, effect upon the position angle of two stars, 467 Aberration of lenses, spherical and chromatic, II, 18

ADAMS, I, 555, 584

AIRY, I, 323, II, 302, 381

Alidade, II, 32, ellipticity of the pivot, 47

Almucantars, defined, I, 19

Altazimuth, II, 315

Altitude, defined, I, 20, parallels of, I, 19

Altitude and azimuth as co-ordinates, I, 18

Altitude and azimuth instrument, II, 315, azimuths observed with, 319, zenith distances, 326, correction for defective illumination, 333

AMICI, II, 449

Amplitude, defined, I, 20, of a star, found when the star is in the horizon, I, 38

ARGELANDER, I, 93, 132, 141, 159, 646, 705, 706, II, 381

Axis of the heavens, defined, I, 21

Azimuth, defined, I, 20, azimuth of a star, found from its declination and hour angle, and the latitude of the observer, 31, found when the star is on the six hour circle, 36, when the star is at its greatest elongation, 37, from its zenith distance, 39

BACHE, I, 324, 342.

BAILY, I, 93, 650

BECHER, II, 104

BEER, I, 543

BERTRAND, II, 469

BESSEL, I, 85, 87, 92, 93, 96, 97, 131, 132, 134, 136, 145, 158, 159, 160, 161, 165, 167, 168, 171, 395, 406, 439, 448, 456, 461, 507, 512, 566, 574, 575, 578, 606, 611, 615, 638, 640, 646, 650, 651, 652, 655, 662, 665, 668, 693, 694, 697, 698, 702, II, 35, 50, 59, 61, 143, 144, 171, 176, 178, 183, 192, 197, 199, 228, 234, 238, 265, 268, 269, 271, 283, 289, 293, 294, 295, 296, 301, 302, 304, 307, 309, 340, 375, 388, 405, 406, 407, 414, 432, 449, 450, 453, 469, 489, 494

BIOT, I, 159, II, 9.

BOHNENBERGER, II, 68, 469

BOND, I, 324, II, 79, 87, 92, 369, 450

BORDA, I, 398, II, 125

BOUGUER, I, 136, 138, II, 403

BOWDITCH, I, 153, 180, 269, 276, 306, 307, 308, 316, II, 125.

BRADLEY, I, 136, 138, 160, 161, 167, 665, 692, 700, 702, 705, 706, II, 489

BRUHNS, I, 136

BRUNNOW, II, 437, 440, 445

BURCKHARDT, I, 448, 686.

BUSCH, I, 692, 700, 701.

CAGNOLI, I, 286.

CAILLET, I, 265, 298

Celestial latitude and longitude as co-ordinates, I, 24

Celestial sphere, I, 17

Chronograph, electro, I, 342 et seq., II, 86

Chronometers, winding, II, 77, transporting, 78, correction for temperature, 79; comparison of, 79, by coincident beats, 80, probable error of an interpolated value of a correction, 83

Chronometric expeditions, I, 323

Circles See graduated circles, meridian circles, &c

Circummeridian altitudes, I, 235 (see time), more accurately reduced, 238, of the Sun, Gauss's method, 244, limits of the methods, 251

CLARK, II, 450

Clocks, II, 84, clock correction, I, 193, II, 174, rate, I, 193

CODDINGTON, II, 9

COFFIN, I, 628, II, 296, 297

Colures, defined, I, 23

Compass, variation of, I, 429

Connaissance (La) des Temps, I, 68

Constants, astronomical, determined by observation, I., 671; constants of refraction, 671, of solar parallax, 673, of lunar parallax, 680, of aberration, 688, 689, of nutation, 698, of precession, 701

Co-ordinates, rectangular, I, 43, transformation of, 48, spherical, 18, transformation of, 27, differential variations of, 50.

Cusps in a solar eclipse, II, 432

DAMOISEAU, I, 574 575, 686

DAUSSY, II, 126, 127

Day, sidereal, I, 52, solar, 53

DEAN, II, 349, 359

Declination, circles of, parallels of, defined, I, 21, of a star, found from its

altitude and azimuth, and the latitude of the observer, 27, found from the star's latitude and longitude, and the obliquity of the ecliptic, 42, of the sun at the time of his transit over a given meridian, 71, of the moon or a planet at the time of transit over a given meridian, 73, reduction of, 115, of stars, found by transits over the prime vertical, II, 271, absolute declination of the fixed stars, determined, I, 665
Declination and hour angle as co-ordinates, I, 21
Declination and right ascension as co-ordinates, I, 22
DELAMBRE, I, 177, 239, 689, 692
DE LANGE, I, 391
Derivatives of a tabulated function, I, 89
Dip, of the horizon, I, 172, 173, of the sea at a given distance from the observer, found, 179
DOLLOND, II, 403
DONATI, I, 126
DOUWES, I, 315, 316

Earth, figure and dimensions of, I, 95, compression of, 96, eccentricity of the meridian, 96, radius found for a given latitude, 99, length of normal terminating in the axis, found for a given latitude—distance from the centre to the intersection of the normal with the axis—radius of curvature of meridian, 101, reduction of observations to the centre, 103
Eclipses of Jupiter's satellites, I, 339
Eclipses, *solar*, prediction for the earth generally, I, 436, fundamental equations—investigation of the condition of beginning or ending of a solar eclipse at a given place on the earth's surface, 439, position of the axis of the shadow, found for any given time, 441, distance of a given place of observation from the axis of the shadow at a given time, found, 444, radius of the shadow found, 448, outline of moon's shadow upon the earth at a given time, found, 456, rising and setting limits, 466, curve of maximum in the horizon, 475, northern and southern limits, 480, curve of central eclipse, 491, duration of total or annular eclipse, 493, place where the central eclipse occurs at noon, found, 494, northern and southern limits of total or annular eclipse, 498, prediction for a given place—time of a given phase computed, 505, instant of maximum obscuration, and degree of obscuration, found, 508, method of the American Ephemeris, 512, correction for refraction, 515, reduction to the sea level, 517, longitude of a place found from the observation of a solar eclipse, 518, longitude corrected, 521, observations upon the sun's cusps, II, 432, *lunar*, I, 542 See Occultations
Ecliptic, defined, I, 22, obliquity of, defined, 23, found, 659
ELLIS, II, 194, 195
EMORY, I, 339
ENCKE, I, 91, 96, 100, 448, 593, 640, II, 469, 475
Ephemeris, American, French, German, I, 68, PEIRCE's method of correcting, 358
Equation of time, I, 54, 71, of equal altitudes, 200, personal equation, II, 189
Equator, celestial, defined, I, 21
Equatorial telescope, II, 367, general theory of, 370, instrumental declination and hour angle of an observed point, found, 371, flexure, 373, instrumental declination and hour angle, reduced to the celestial declination and hour angle, 375, adjustment of, 379
Equinoctial, defined, I, 21, points, defined, 23, determined, 665
Equinoxes, defined, I, 23
ERTEL, II, 132, 315, 316, 329

FERGUSON, I, 126
Fixed stars, proper motion of, I, 620, heliocentric or annual parallax of, defined, 643, found in longitude and latitude, 644, found in right ascension and declination, 645, mean and apparent places of, 645
FRANKLIN, Sir JOHN, I, 583
FRAUNHOFER, II, 367, 368

GALLOWAY, I, 706
GAMBEY, II, 125
GAUSS, I, 31, 34, 199, 244, 246, 282, 286, 300, 339, 627, 628, 635, 643, 674, 705, II, 23, 66, 148, 469
GAY LUSSAC, I, 143
Geocentric place, I, 103
GERLING, I, 679, II, 469
GILLISS, I, 352, 680
GOETZE, II, 9
GOULD, I, 342, 344, 346, 350, 680, II, 304
Graduated circles, II, 29, eccentricity of 37, 39, periodic functions, 42, errors of graduation, 51

HADLEY, II, 92
HALLEY, II, 131
HANSEN, I, 85, 182, 439, 475, 686, —— II, 59, 144, 171, 174, 213, 216, 219, 220, 249, 251, 257, 304, 407, 469
Heliometer, II, 403, general theory of, 407, determination of constants of, 423
HENDERSON, I, 686, 706
HERSCHEL, I, 693, 694, 703, 705, II, 9, 27, 126

HIPPARCHUS, I, 686
Horizon, defined, I, 18, dip of, defined, 172, dip found, 173, distance of, at sea, found, 178
Hour angle, defined, I, 21, numerical expression of, 27, of a star, found from its altitude and azimuth, and the latitude of the observer, 27, found when the star is at its greatest elongation, 37, when the star is on the prime vertical of a given place, 37, when the star is in the horizon, 38, from its zenith distance, 39, found at a given time, 64.
Hour circles, defined, I, 21
HUBBARD, I, 628, 651
HULSSE, I, 211

Interpolation, simple, I, 69; by second differences, 73, by differences of any order, 79, BESSEL's formula, 85, into the middle, 87, formula arranged according to the powers of the fractional part of the argument, 89

Jahrbuch, Berliner Astronomisches, I, 68
JOHNSON, I, 706
Jupiter's satellites, eclipses of, I, 339

KAISER, I, 391
KANE, I, 583
KEITH, I, 628
KENDALL, I, 352
KEPLER, I, 592, 673
KESSEL, II, 235, 268
KNORRE, II, 102
KRAMP, I, 153, 158

LACAILLE, I, 686, 706
LAGRANGE, I, 148, 593, 506
LALANDE, I, 93, 428
LAMBERT, I, 542
LAPLACE, I, 148, 153, 156, 169, II, 469
Latitude, celestial—circles of—parallels of, I, 24, geographical, 25, of a star, found from its declination and right ascension, and the obliquity of the ecliptic, 39, reduction of, for the compression of the earth, 97, distinction between geodetic and astronomical, 103, astronomical latitude found by meridian altitudes, or zenith distances, 223; by a single altitude at a given time, 229, by reduction to the meridian when the time is given, 233, by circummeridian altitudes, 235, by the pole star, 253, by two altitudes of the same star, or different stars, and the elapsed time between the observations, 257, by two altitudes of the sun, 266, by two equal altitudes of the same star, or of the sun, 270, by two altitudes of the same or different stars, with the difference of their azimuths, 277, by two different stars observed at the same altitude when the time is given, 277, by three or more different stars observed at the same altitude when the time is not given, 280, by CAGNOLI's formulæ, 286, by the transits of stars over vertical circles, 293, by altitudes near the meridian when the time is not known, 296, by the rate of change of altitudes near the prime vertical, 303, found AT SEA, by meridian altitudes, 304, by reduction to the meridian when the time is given—by two altitudes near the meridian when the time is not known, 307, by three altitudes near the meridian when the time is not known, 309, by a single altitude at a given time, 310, by the change of altitude near the prime vertical—by the pole star, 311, by two altitudes with the elapsed time, 313, DOUWES's method of "double altitudes," 315, determined by a transit instrument in the prime vertical, II, 238, 242, 252, 254, 260, 265, by TALCOTT's method, 342
Least squares, method of, APPENDIX, II, 469
LEGENDRE, II, 469
Level, II, 70; value of a division found—radius of curvature—effects of changes of temperature, 75, radius of curvature of different parts of the tube, 76, level constant, 153
LE VERRIER, I, 578, 601
LIAGRE, II, 469
LIEUSSON, I., 333, II, 79.
Light, velocity of, I, 640
LINDENAU, I, 692, II, 469
LITTROW, I, 300, 302, II, 9
LLOYD, II, 9.
LOCKE, II, 89
Longitude, celestial, defined, I, 24, of a star, found from its declination and right ascension, and the obliquity of the ecliptic, 39, terrestrial longitude, found by astronomical observations—by portable chronometers, 317, by terrestrial signals, 337, by celestial signals, 339, by the electric telegraph, 341, by moon culminations, 350, by azimuths of the moon, or transits of the moon and a star over the same vertical circle, 371, by altitudes of the moon, 382, by lunar distances, 393, by an eclipse of the sun, 518, by occultations, 550, terrestrial longitude found AT SEA, by chronometers, 420, by lunar distances, 422, by the eclipses of Jupiter's satellites—by the moon's altitude, 423, by the occultations of stars by the moon, 424, by the observed contact of the moon's limb with the limb of a planet, 578

Lunar distance, found at a given time, I, 75, longitude found by, 393
Lundahl, I, 693, 701, 706
Lyman, II, 366

Madler, I, 370, 542, 543, 606, 703, 706
Mahler, II, 367
Martins, II, 106, 119, 127, 130
Mayer, I, 542, II, 145
Measurement of angles, II, 29
Meridian, celestial, defined, I., 19
Meridian circle, II, 282, reduction to the meridian, 289, observation by reflection, 293, flexure, 302, observations of the declination of the moon, 304, declination of a planet, or the sun, 309, correction of the observed declination of a planet's or the moon's limb for spheroidal figure and defective illumination, 310
Meridian line, defined, I, 19, direction found by the meridian passage of a star, by shadows, 429, by single altitudes of a star, 430, by equal altitudes of a star, 431, by the angular distance of the sun from any terrestrial object, 432, by two measures of the distance of the sun from a terrestrial object, 434, by the azimuth of a star at a given time, 434, by the greatest elongation of a circumpolar star, 434.
Meridian mark, II, 187
Merz, II, 367
Micrometer, filar, II, 59, 391, value of a revolution, found, 60, 360, effect of temperature upon the value of a revolution, 68, position micrometer, 69, ring micrometer, 436, other micrometers, 449.
Micrometric observations — filar micrometer—distance and position angle of two stars, found, II, 391, correction of the observed position angle for errors of the equatorial instrument, 392; apparent difference of right ascension and declination of two stars, found, 397, correction for refraction, 450, correction for precession, nutation, and aberration, 465.
Microscope, reading, II, 33; error of runs, 35
Mitchel, II, 87
Moon culminations, I, 350
Morse, II, 86, 87
Mural circle, II, 282

Nadir, defined, I, 19, point, II, 285.
Nautical Almanac, British, I, 68.
Newton, II, 92
Nicolai, I, 364, 627, 635
Nonagesimal, I, 25
Nonius, II, 30
Noon, apparent, mean, I, 53
Nutation, I, 624, in right ascension and declination for a given star at a given time, found, 625, general tables for, explained, 626, constant of, 624, 698; effect upon the position angle of two stars, found, II, 467.

Obliquity of the ecliptic See ecliptic
Occultations, of fixed stars by the moon, I, 549, longitude found by, 550, 578, prediction for a given place, 557, limiting parallels of latitude found, 561, of planets, 565, form of a planet's disc, 566, curve of illumination of a planet's surface, found, 569, of Jupiter, 575, Saturn, Saturn's Ring, Mars, Venus, and Mercury, 576, Neptune, Uranus, 583, of fixed stars by a planet, 601, of Jupiter's satellites, 340
Olbers, I, 107, II, 16
Olufsen, I, 686
Oudemans, I, 391, 448, 551, 555.

Pape, I, 601
Parallactic angle, defined, I, 30, of a star on the prime vertical of a given place, found, 37, found from a star's zenith distance, 39
Parallax, defined, I, 104, found in altitude or zenith distance, the earth regarded as a sphere, 105, of a star, in zenith distance and azimuth, when the geocentric zenith distance and azimuth are given and the earth is regarded as a spheroid, 107, of a star in zenith distance and azimuth, when the apparent zenith distance and azimuth are given, the earth regarded as a spheroid, 112, reduced, reduction of, 113, of the planets or the sun, 113, in zenith distance, for the point in which the normal meets the earth's axis, 116, in zenith distance for the same point, when the apparent zenith distance is given, 118; of a star in right ascension and declination when its geocentric right ascension and declination are given, 119, of a star in right ascension and declination, when its observed right ascension and declination are given, 123, in latitude and longitude, 126, solar, constant of, 673, of a planet, or the sun, found by meridian observations 674, of the sun, found by extra-meridian observations of a planet, 677, lunar, constant of, 680, of a fixed star, found by micrometric measures, 693
Pearson, II, 9, 450
Peirce, I, 148, 347, 351, 358, 361, 362, 366, 369, 578, II, 193, 202, 207, 256, 261, 357, 469, 490
Periodic functions, II, 42
Personal equation, II, 189, personal scale, 193.

PETERS, C A F, I., 606, 624, 625, 626, 627, 650, 651, 652, 662, 665, 693, 698, 699, 701, II, 59, 318, 319, 497.
PETERSEN, I, 256, 601, II, 440
PIAZZI, I, 94, 702
PISTOR, II, 106, 119, 127, 130.
Planets, occultations of, I, 565
Plumb line, abnormal deviations of, I, 102
POISSON, II, 469
Polar distance, defined, I, 22
Portable transit instrument (see transit instrument) as a zenith telescope, II, 366
POTTER, II, 9
Precession, luni-solar, planetary, I, 604, change in the obliquity of the ecliptic, 605, general precession in longitude, and the position of the mean ecliptic, found, 605, in longitude and latitude of a given star, from the epoch 1800, found, 608, between any two given dates, 610, annual precession in longitude for a given date, 611; in right ascension and declination, between any two given dates, 613, annual precession in right ascension and declination, 616, position of the pole of the equator at a given time, found, 618, constant of, 701, effect upon the position angle of two stars, found, II, 467
PRECHTEL, II, 9
Prime vertical, defined, I, 19
Prismatic circle, II, 127
Proper motion of the fixed stars, I, 620, reduced from one epoch to another, 621, on a great circle, 623
Proportional logarithms, I, 75
PUISSANT, I, 217, 250

RAMSDEN, II, 23, 449
RAPER, I, 422, 305, II, 104
Reduction of a planet's place, I, 657
Reduction to the meridian for circum-meridian altitudes, I, 235, 238, for meridian circle observations, II, 289
Refraction, general laws of, I, 127, astronomical, 128, tables of, explained, 130, 169, formula investigated, 134, differential equation of, 136, SIMPSON'S or BOUGUER'S formula, BRADLEY'S, 138, first hypothesis, 136, second hypothesis, 143, of a star in right ascension and declination, found, 171, constants of, determined, 671, effect in transit observations, II, 186
REGNAULT, I, 141, 143, 160, 161
Repeating circle, II, 119
REPSOLD, II, 157, 272, 283, 303
Right ascension, defined, I, 23, of a star, found from the star's hour angle, 39, from its latitude and longitude, and the obliquity of the ecliptic, 42, of the sun at the time of his transit over a given meridian, 71, of the moon or a planet at the time of transit over a given meridian, 73, of the fixed stars, deduced from transits II, 175, of the moon, deduced from an observed transit, 214 Determination of the absolute R A. of fixed stars I, 665
Ring micrometer, II, 436, correction for curvature, 438, correction for the proper motion of one of the objects, 441; radius of the ring, found, 445, correction for refraction, 461
RITTENHOUSE, II, 66, 187
ROCHON, II, 449
RUDBERG, I, 143, 160
RŪMKER, I, 93

SAFFORD, I, 512
SANTINI, I, 94
SAWITSCH, II, 9, 212, 221, 264
SAXTON, II, 87, 91
SCHOTT, I, 583
SCHUMACHER, I, 34, 256, 627, 635, II, 130
Semidiameters of celestial bodies, I, 180, augmentation of, 183, contraction of the vertical semidiameter of the sun or moon, produced by refraction, found, 184, contraction of any inclined semidiameter, produced by refraction, 186, contraction of horizontal, 187, planets' mean, 687
Sextant, II, 92, adjustments, 95, 96, index correction, by a star, by the sun, 98, method of observation, 99, altitude from artificial horizon, 101, from the sea horizon, 103, equal altitudes, 104; how to examine the colored glasses, 106, parallax, 107, errors of the index glass, 108, error of the sight line, 112; eccentricity, 117
SIMPSON, I, 138
Six hour circle, defined, I, 26
Solstices, defined, I, 23
Spherical astronomy, defined, I, 18
Star catalogues, I, 91
STEINHEIL, II, 132, 234, 268
STRUVE, I, 93, 324, 326, 328, 329, 331, 332, 575, 578, 606, 632, 640, 692, 706, 707, II, 84, 157, 192, 262, 272, 275, 282, 283, 318, 367, 381, 385, 450
SUMNER'S method of finding a ship's place at sea, I, 424
Sun, right ascension of, I, 71, meridian zenith distances of, 228, mean motion of, 652, epoch of mean longitude of, 653, motion in space, 703, observations upon the cusps in a solar eclipse, II., 432.

TALCOTT, I, 226, II, 340, 366, 367, his method of finding the latitude, 342

Telescope, II, 9, magnifying power, 12, field of view, 14, brightness of images, and intensity of their light, 15, spherical and chromatic aberration, 18, achromatic eye pieces, 20, diagonal eye pieces, 22, magnifying power measured, first method, 22, second method, 23, third method, 25, fourth method, 26, reflecting, 27, finding, 28, zenith, II, 340, equatorial, 367

Time, apparent, mean, sidereal, solar, I, 53, civil, astronomical, 54, conversions of, 54, 57, 59, 60, 62, 655, local mean, found, 65, equation of, 54, 71, local, Greenwich, defined, 55, Greenwich, corresponding to a given right ascension of the moon on a given day, found, 75, corresponding to a given lunar distance on a given day, found, 77, found by astronomical observations, 198, by transits, 196, by equal altitudes of a star, 196, by equal altitudes of the sun before and after noon, 198, before and after midnight, 201, correction for small inequalities in the altitudes, 202, probable error of observation of equal altitudes, 205, found by a single altitude, or zenith distance, 206, mean of times reduced to mean of zenith distances, 215, found by the disappearance of a star behind a terrestrial object, 217, true and apparent rising or setting of a star—beginning and ending of twilight, 218, found AT SEA, by a single altitude, 219, by equal altitudes, 220, found with a portable transit instrument in the meridian, II, 200, out of the meridian, 215

Transit, I, 52, time of the moon's or a planet's transit over a given meridian, found, 72

Transit circle, II, 282

Transit instrument, II, 131, method of observation, 138, general formulæ, 139, in the meridian, 140, thread intervals, 146, reduction to the middle thread, 149, reduction to the mean of the threads, 151, level constant, 153, inequality of pivots, 155, collimation constant, 160, azimuth constant, 169, portable, in the meridian, 200, in any vertical plane, 209, adaptation as a zenith telescope, II, 366

Transit instrument in the prime vertical, geographical latitude determined, II, 238, 242, 260, 252, 254, 265, adjustment in the prime vertical, 289, correction for inclination of the axis, 241, declinations determined, 271.

Transits, of the moon, II, 176 of the sun or a planet, 182, correction of the transit when the planet's defective limb has been observed, 185, effect of refraction, 186, probable error of observation, 194, of Jupiter's satellites over the planet's disc, and of shadows of the satellites, I, 340, of Venus and Mercury over the sun's disc, 591

TROUGHTON, II, 119, 127

Twilight, time of beginning and ending, I, 218

TWINING, I, 602

VALZ, II, 25

VEGA, I, 211

Vernier, II, 80

VERNIER, PETER, II, 30

Vertical circles, lines, and planes, defined, I, 19

WALKER, I, 342, 355, 364, II, 398, 402

WARNSTORFF, I, 24, 256, 627, 635

WEISSE, I, 93

WICHMANN, II 436

WOLFERS, I, 93, 652

WRIGHT, I, 504

WURDEMANN, I, 344, II, 136

Year, length of, I, 652, fictitious, 651; beginning of fictitious, found, 654

ZACH, I, 302

ZECH, I, 93, 211, 652

Zenith, defined, I, 19

Zenith distance, defined, I, 20, of a star, found from its declination and hour angle, and the latitude of the observer, 81, found when the star is on the six hour circle, 36, found when the star is at its greatest elongation, 37, found when the star is on the prime vertical, 37, reduction of observed zenith distances to the centre of the earth, 189, change of, in a given interval of time, 213, mean of the zenith distances reduced to the mean of the times, 214 of the sun, 228 (see II, 326)

Zenith telescope, II, 340, correction for refraction, 344, for level, for micro meter, 346, reduction to the meridian, selection of stars, 347, discussion of the results, 350, value of a division of the level, 358, value of a revolution of the micrometer, 360, extra meridian observations for latitude, 364

END OF VOL II.

Fig 1

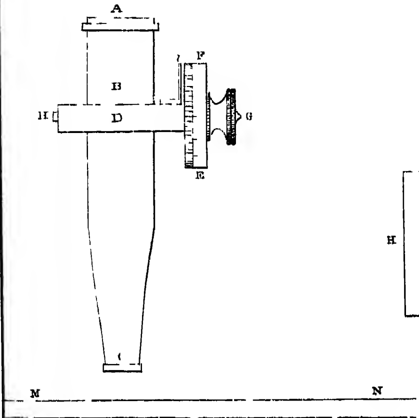

Fig 2

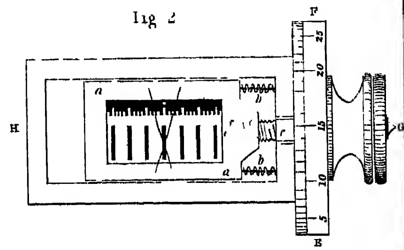

Fig 3

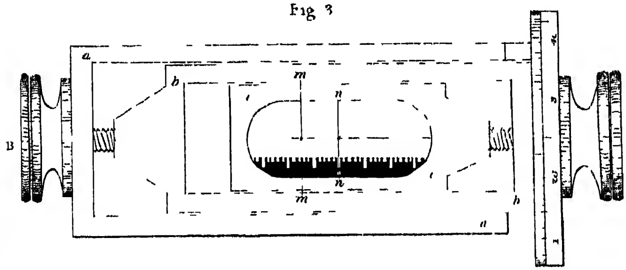

Fig 4

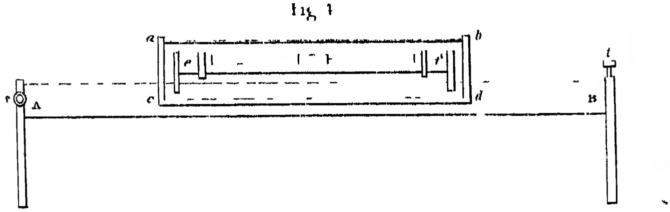

Fig 5

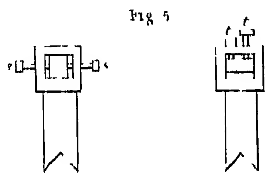

Fig 1

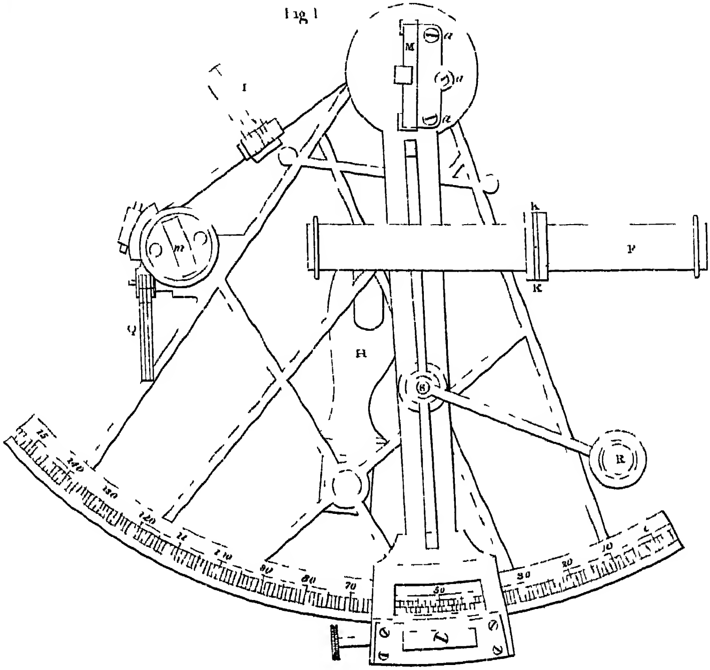

Fig 2

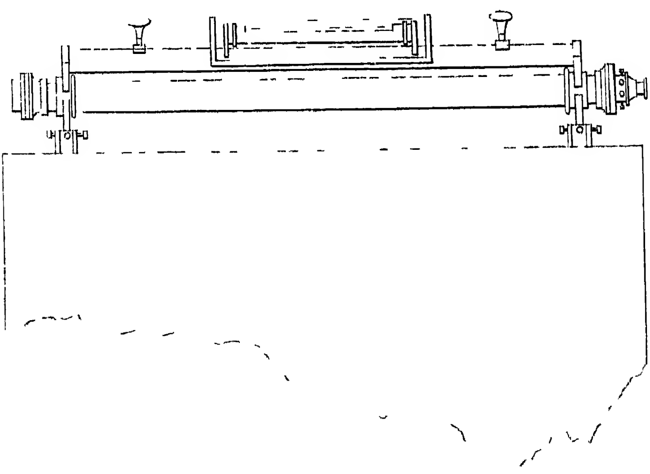

Scale $\frac{1}{24}$

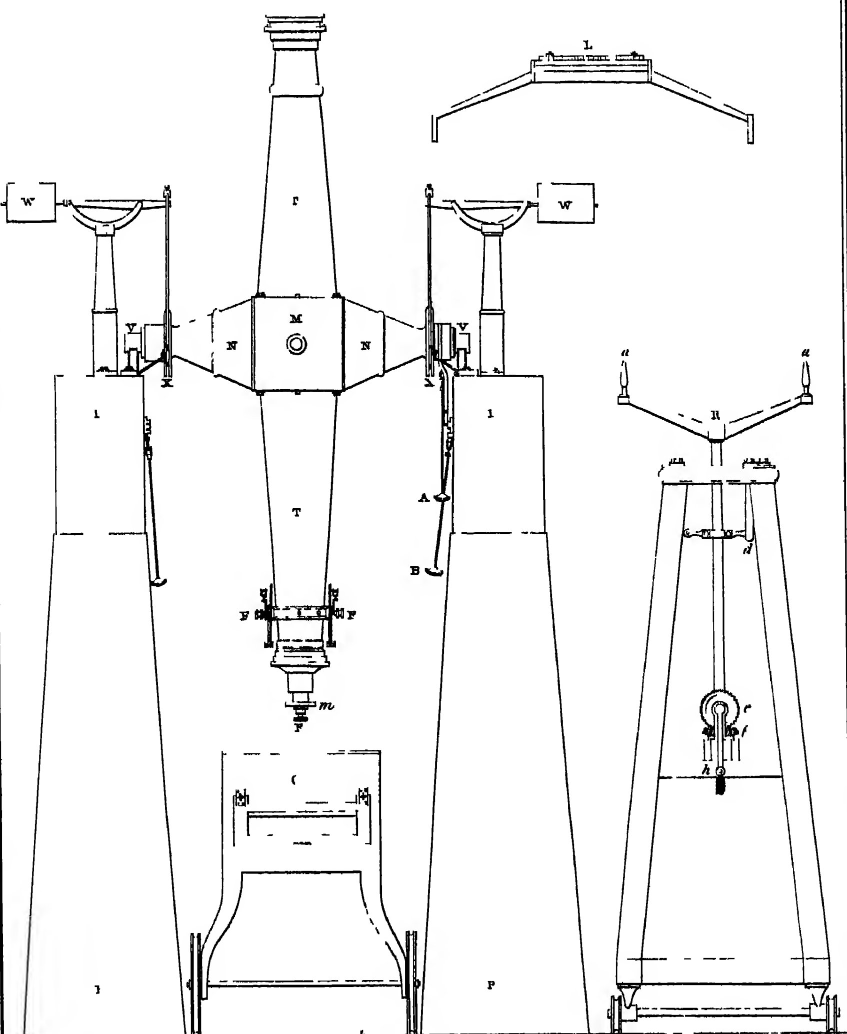

Illman Bros Engravers

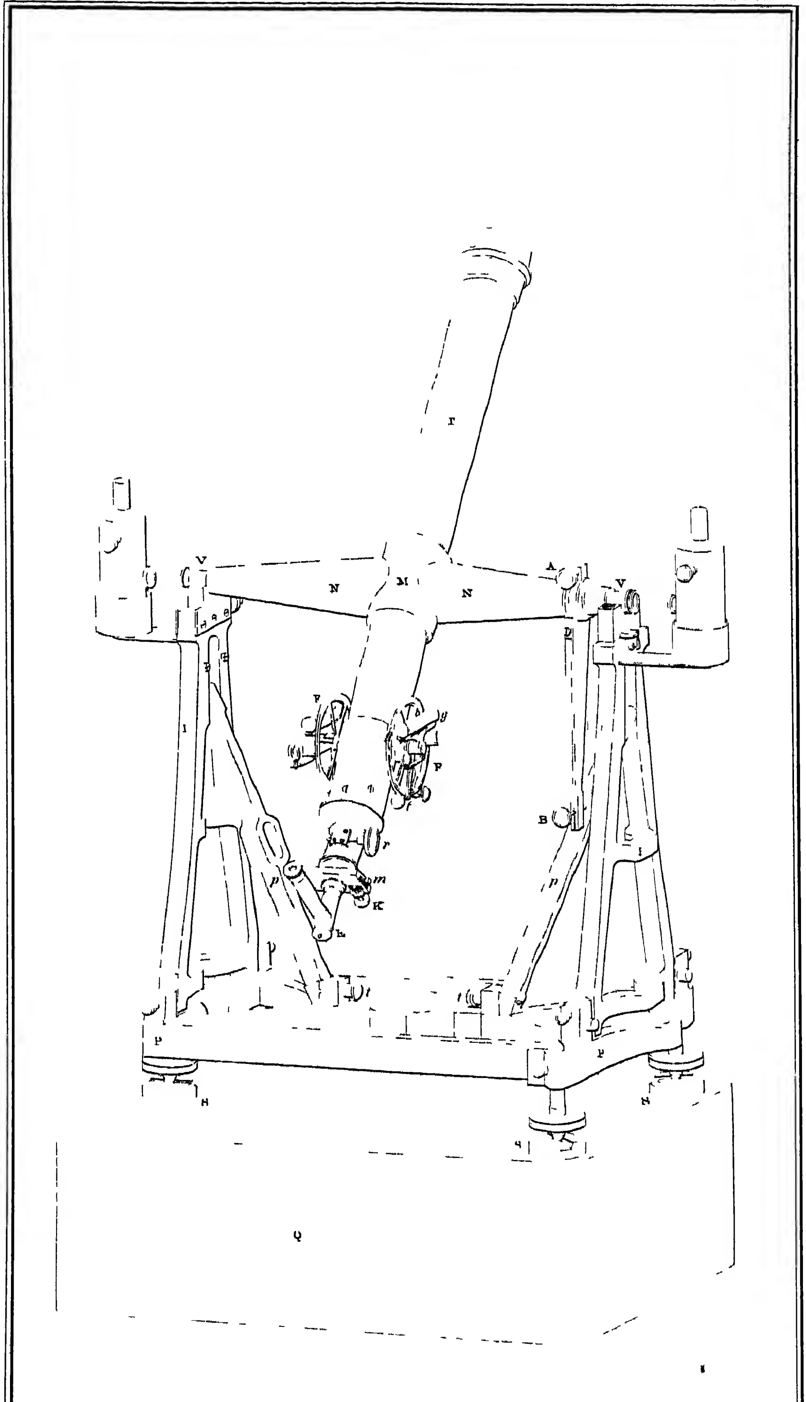
I
V
N
M
N
A
V
D
F
g
F
B
r
m
K
p
n
P
P
Q

Scale 1/20

Fig 1

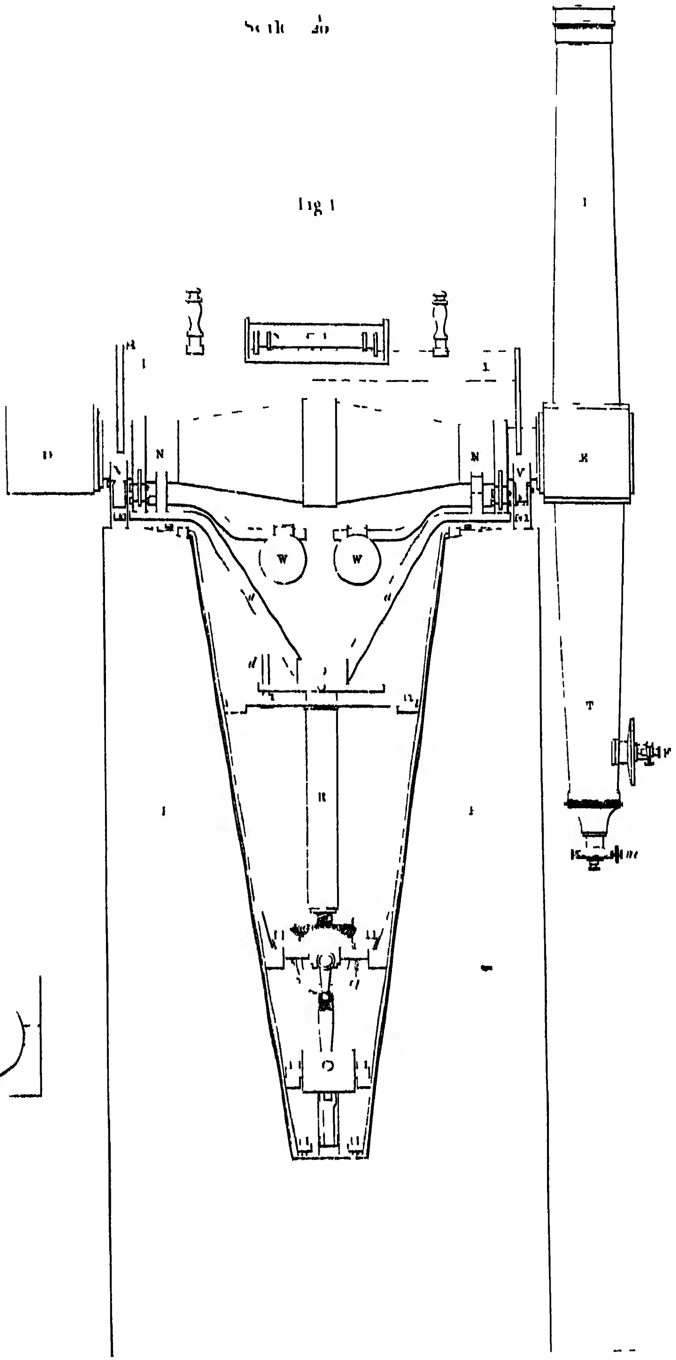

Fig 2

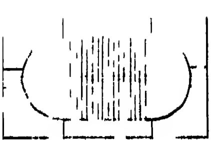

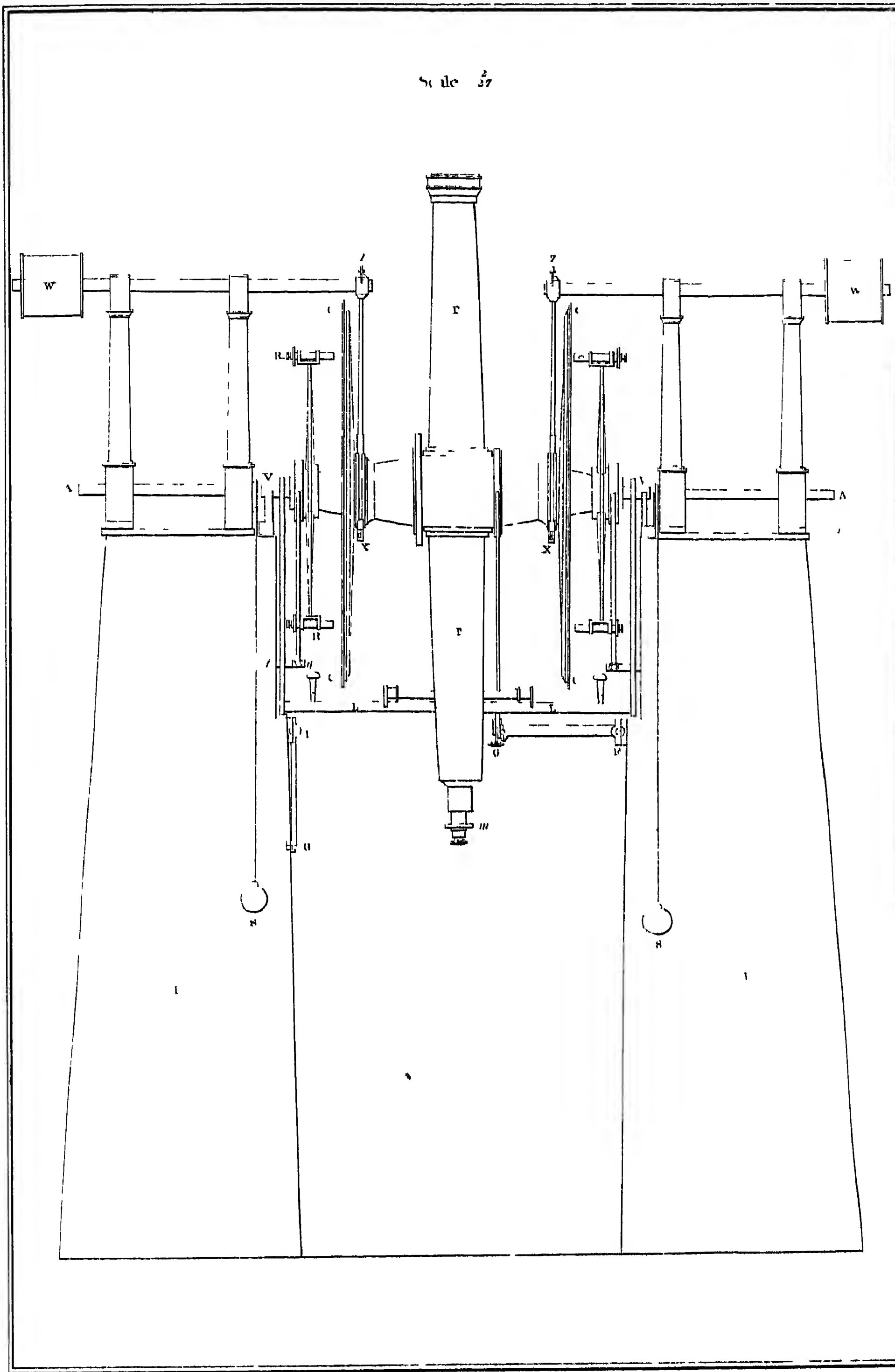

Scale $\frac{2}{27}$

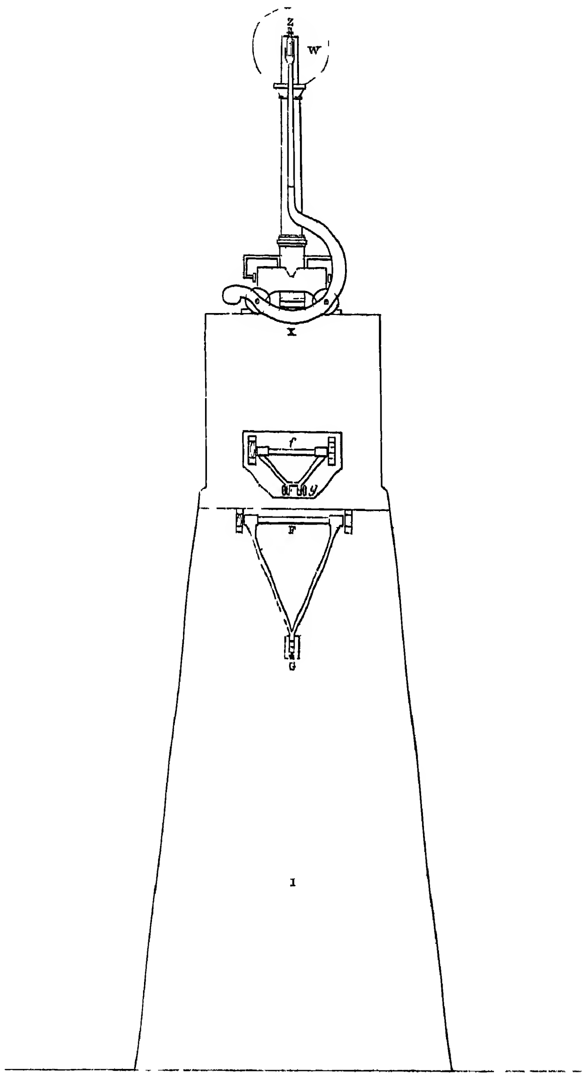

Scale $\frac{1}{7}$

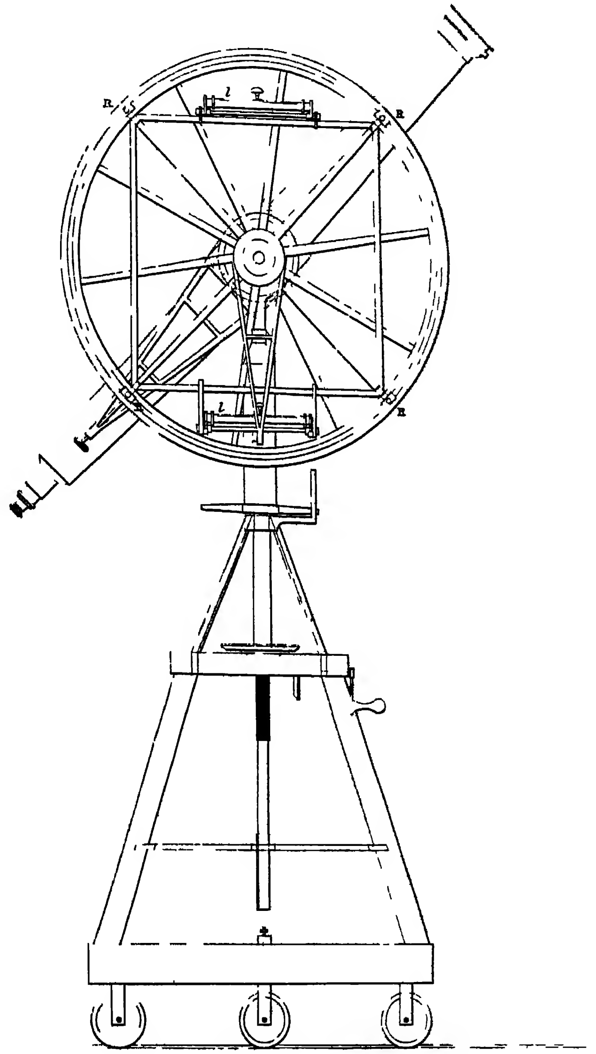

Scale $\frac{1}{20}$

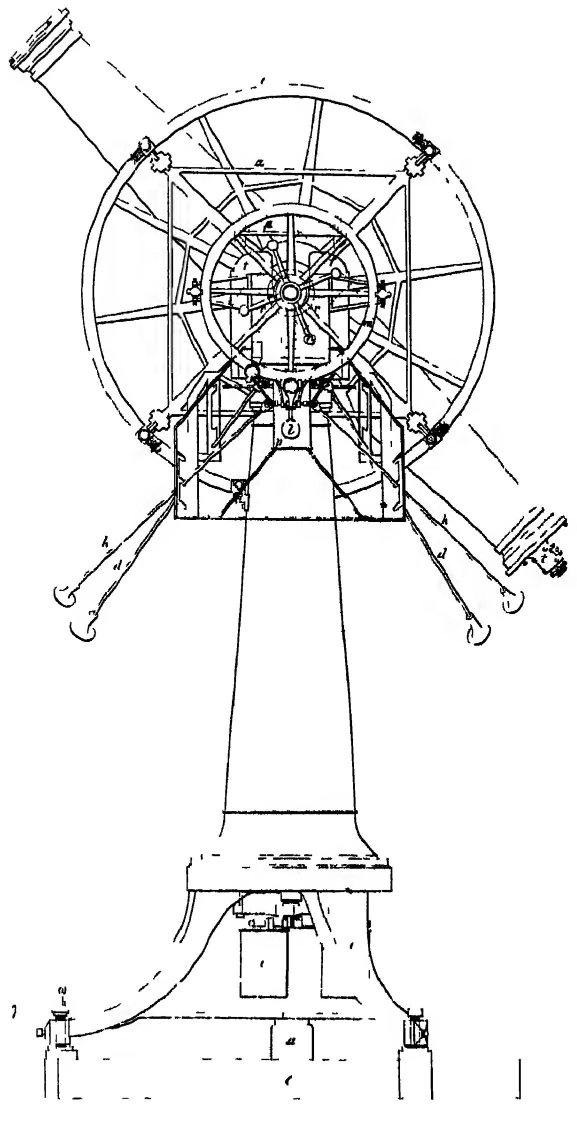

Illustrat. Engravers

PLATE XI

Scale = $\frac{1}{20}$

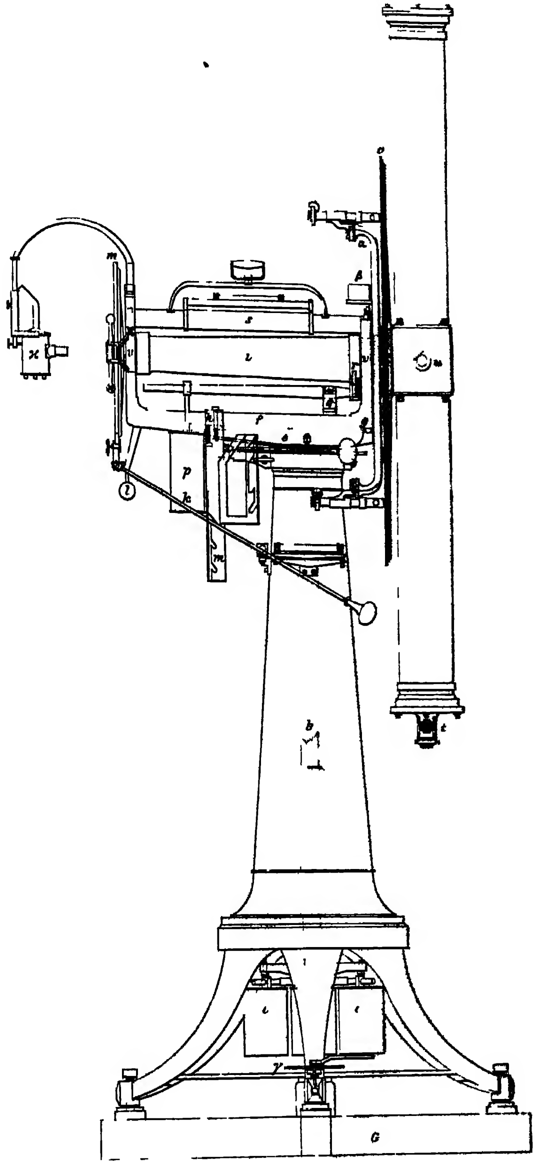

lig 1

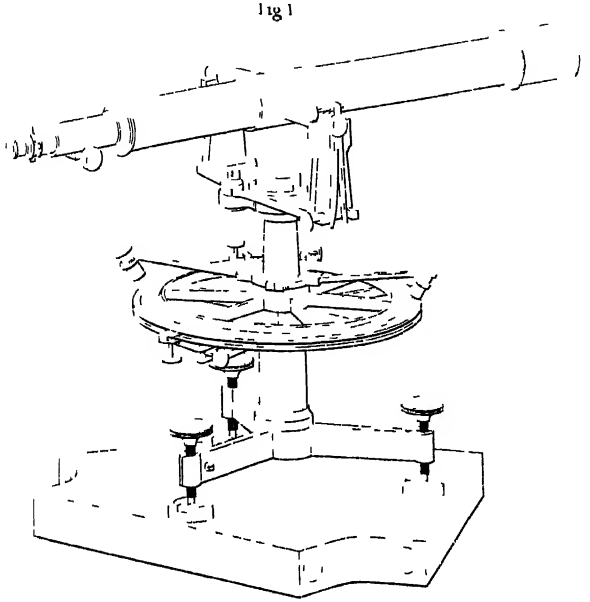

lig 2

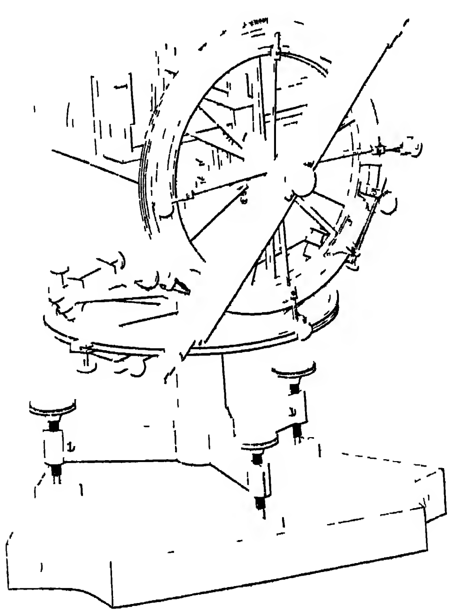

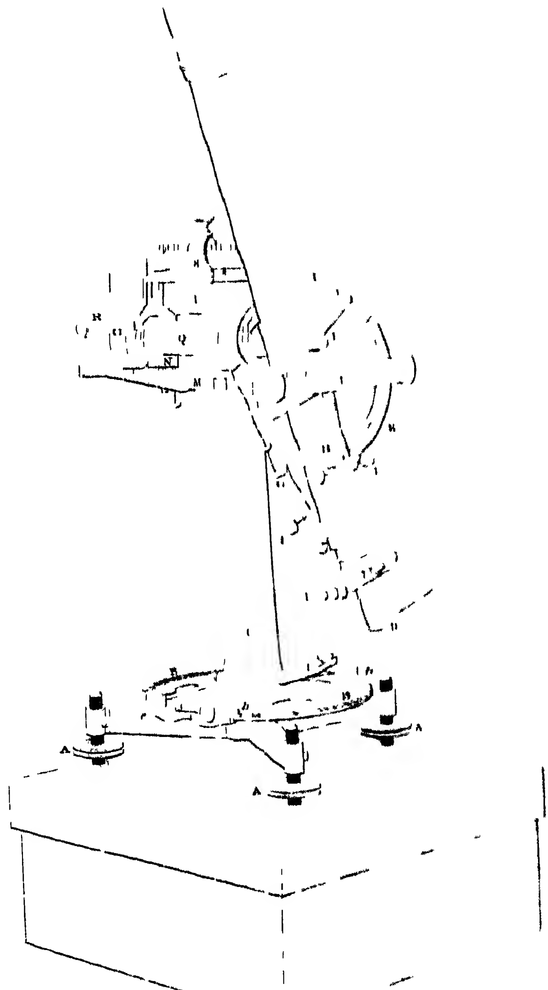
A
A
A
N